YAMAHA

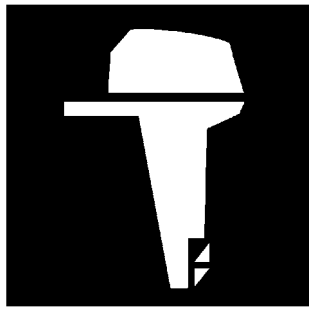

PARTS CATALOGUE

F115TRH (68V8)
LF115TRH (68W8)
F115AET'09 (68V8)
FL115AET'09 (68W8)

1H68V-100E1

( )

YAMAHA GENUINE Parts & Accessories

2010/5/10

NEWS NO.	DATE	COMMENT
PE0-OM-080060	MAY/26/2008	MOD:FIG.21 PTT P/No. REVISION
PE0-OM-080064	Sep./26/2008	MOD:FIG.13 ELECTRICAL 1, FIG.15 ELECTRICAL 3 REVISION
PE0-OM-100033	May,10,2010	COR:FIG.7 INTAKE 2 LIST CORRECTION

F115TRH/F115AET
LF115TRH/FL115AET
PARTS CATALOGUE
©2008 by Yamaha Motor Co., Ltd.
1st edition, April 2008
All rights reserved.
Any reprinting or unauthorized use
without the written permission of
Yamaha Motor Co., Ltd.
is expressly prohibited.
Printed in Japan.

FOREWORD

This Parts Catalogue is related to the parts for the model(s) on the cover page. When you are ordering replacement parts, please refer to this Parts Catalogue and quote both part numbers and part names correctly.

1. Modifications or additions which have been made after the issue of the Parts Catalogue will be announced in the Parts News.
   It is advisable that you make the necessary corrections to the Parts Catalogue according to the Parts News.

2. Abbreviations
   The following abbreviations are used in this Parts Catalogue.

   "UR" Use specified parts number.
   "UN" Use as many as needed.
   "AP" Alternate Parts
   "LM" Locally Made (Parts need to be ordered locally)
   "F#" Frame No. (Applicable machine No.)
   "O/S" Over Size

3. The number of components for assembly
   - Parts, which are to be supplied in an assembly, are listed with a dot (.) in front of the part name as shown below.
   - The numeral appearing to the right of each component part indicates the quantity of parts for each assembly unit.

PART NO.	DESCRIPTION	Q'TY	REMARKS
2F5–83310–60	FRONT FLASHER LIGHT ASSY	2	
115–83311–60	.BULB (6V–18W)	1	

4. Applicable colours of graphics are represented in the "REMARKS" as shown below.

PART NO.	DESCRIPTION	Q'TY	REMARKS
2N4–24110–00–X5	FUEL TANK COMP.	2	MXR
3J1–24240–10	.GRAPHIC, FUEL TANK	1	FOR MXR

5. Note that the illustrations for reference in finding parts numbers are not to be used for assembling. When assembling, please use the applicable service manual.

6. The asterisk (*) before a reference number indicates modified items after the first edition.

7. Applicable Serial No.

   Engine Serial No.

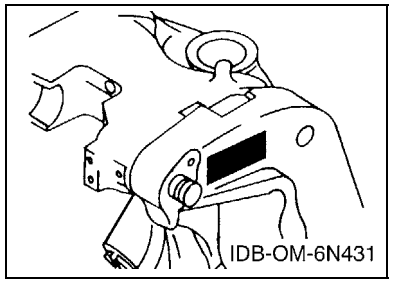

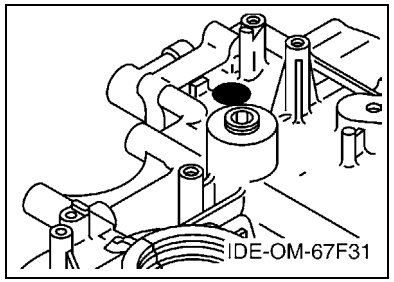

8. Applicable Engine Starting Serial No.

Model	Serial No.	Model	Serial No.
F115	68V-1095514	F115A	68V-1095514
LF115	68W-1004171	FL115A	68W-1004171

9. Applicable Colour Code

Abbreviation	Colour Name	Colour Code
DBN1	DARK BLUISH GRAY 1	008D

10. Quantity Column Information

Column No.	Name Of Q'ty Column	Applicable Model
1	68V8	F115TRH,F115AET
2	68W8	LF115TRH,FL115AET

CONTENTS

TOP COWLING 1
CYLINDER & CRANKCASE 1 3
CRANKSHAFT & PISTON 5
CYLINDER & CRANKCASE 2 6
VALVE 8
INTAKE 1 11
INTAKE 2 12
FUEL INJECTION NOZZLE 14
FUEL INJECTION PUMP 16
FUEL 1 18
FUEL 2 20
GENERATOR 21
ELECTRICAL 1 23
ELECTRICAL 2 24
ELECTRICAL 3 27
STARTING MOTOR 29
BOTTOM COWLING 31
CONTROL 34
BRACKET 1 36
BRACKET 2 38
POWER TRIM & TILT ASSY 1 40
POWER TRIM & TILT ASSY 2 42
UPPER CASING 44
OIL PAN 46
LOWER CASING & DRIVE 1 48
LOWER CASING & DRIVE 2 52
LOWER CASING & DRIVE 3 54
LOWER CASING & DRIVE 4 58
FUEL TANK 1 60
FUEL TANK 2 61
STEERING GUIDE 62
REMOTE CONTROL BOX 63
REMOTE CONTROL ASSY 1 64
REMOTE CONTROL ASSY 2 67
REMOTE CONTROL ASSY 3 70
METER 73
SWITCH & PANEL 1 75
SWITCH & PANEL 2 76
REPAIR KIT 1 77
REPAIR KIT 2 78

INDEX

NUMERICAL INDEX 80

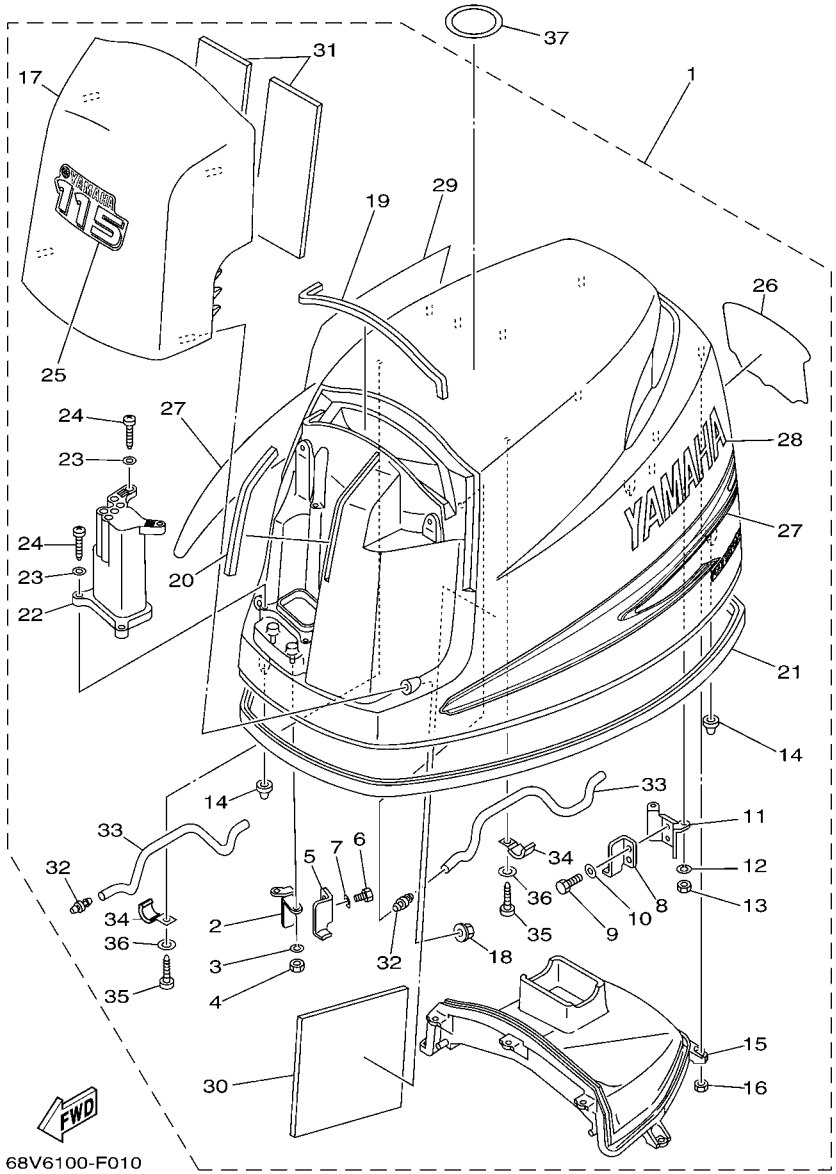

FIG. 1 TOP COWLING

REF. NO.	PART NO.	DESCRIPTION	68V8	68W8				REMARKS
1	68V–42610–12–8D	TOP COWLING ASSY	1	1				
	68V–42610–B2–8D	TOP COWLING ASSY	1					F115TJR
2	68V–42647–00	.HOLDER, CLAMP BAND	1	1				
3	92990–06100	.WASHER, SPRING	2	2				
4	95380–06600	.NUT, HEXAGON	2	2				
5	68V–42651–00	.HOOK	1	1				
6	97095–06012	.BOLT	2	2				
7	92995–06600	.WASHER	2	2				
8	68V–42652–00	.HOOK	1	1				
9	97095–06012	.BOLT	2	2				
10	92995–06600	.WASHER	2	2				
11	67F–42649–00	.HOLDER, CLAMP BAND	1	1				
12	92990–06100	.WASHER, SPRING	2	2				
13	95380–06600	.NUT, HEXAGON	2	2				
14	67F–42662–00	.DAMPER	3	3				
15	68V–42613–00	.MOLDING, AIR DUCT	1	1				
16	95380–06600	.NUT, HEXAGON	7	7				
17	68V–42612–00–8D	.AIR DUCT, TOP COWLING	1	1				
18	90179–06M28	.NUT	4	4				
19	68V–42628–00	.SEAL	1	1				
20	68V–42718–00	.RUBBER, SEAL 3	1	1				
21	68V–42615–00	.SEAL	1	1				
22	68V–42632–00	.WINDOW	1	1				
23	92990–05200	.WASHER, PLAIN	4	4				
24	97780–50625	.SCREW, TAPPING	4	4				
25	68V–42677–10	.GRAPHIC, FRONT	1	1				
	68V–42677–A0	.GRAPHIC, FRONT	1					F115TJR

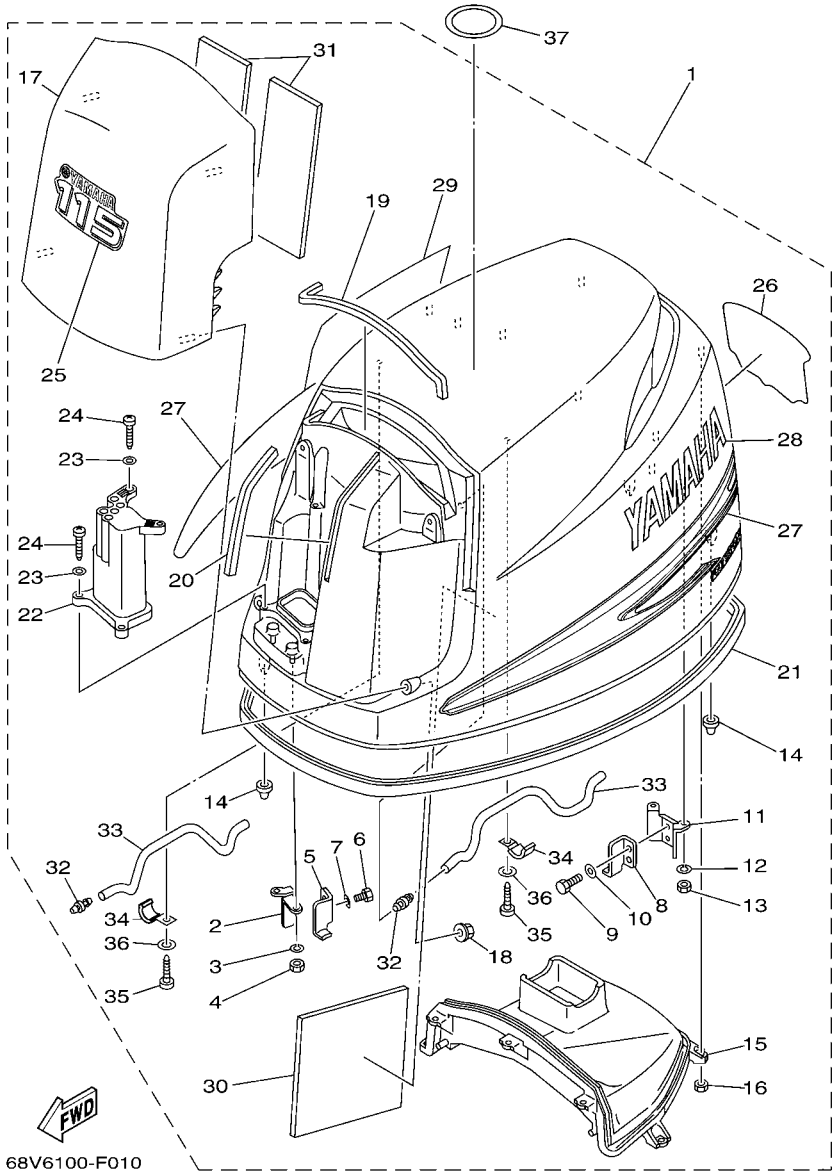

FIG. 1 TOP COWLING

REF. NO.	PART NO.	DESCRIPTION	68V8	68W8				REMARKS
26	68V–42678–10	.GRAPHIC, REAR	1	1				
	68V–42678–B0	.GRAPHIC, REAR	1					F115TJR
27	68V–W0070–10	.GRAPHIC SET	1	1				
28	68V–42681–10	.MARK, COWLING	1	1				
29	68V–42682–10	.MARK, COWLING	1	1				
30	68V–42617–00	.DAMPER, FORM	1	1				
31	68V–42619–00	.DAMPER, FORM	2	2				
32	6H3–44391–01	.NIPPLE, HOSE	2	2				
33	90445–10M18	.HOSE (L295)	2	2				
34	90465–08M63	.CLAMP	2	2				
35	97780–50620	.SCREW, TAPPING	2	2				
36	92990–05200	.WASHER, PLAIN	2	2				
37	67F–13434–10	LABEL, CAUTION	1	1				

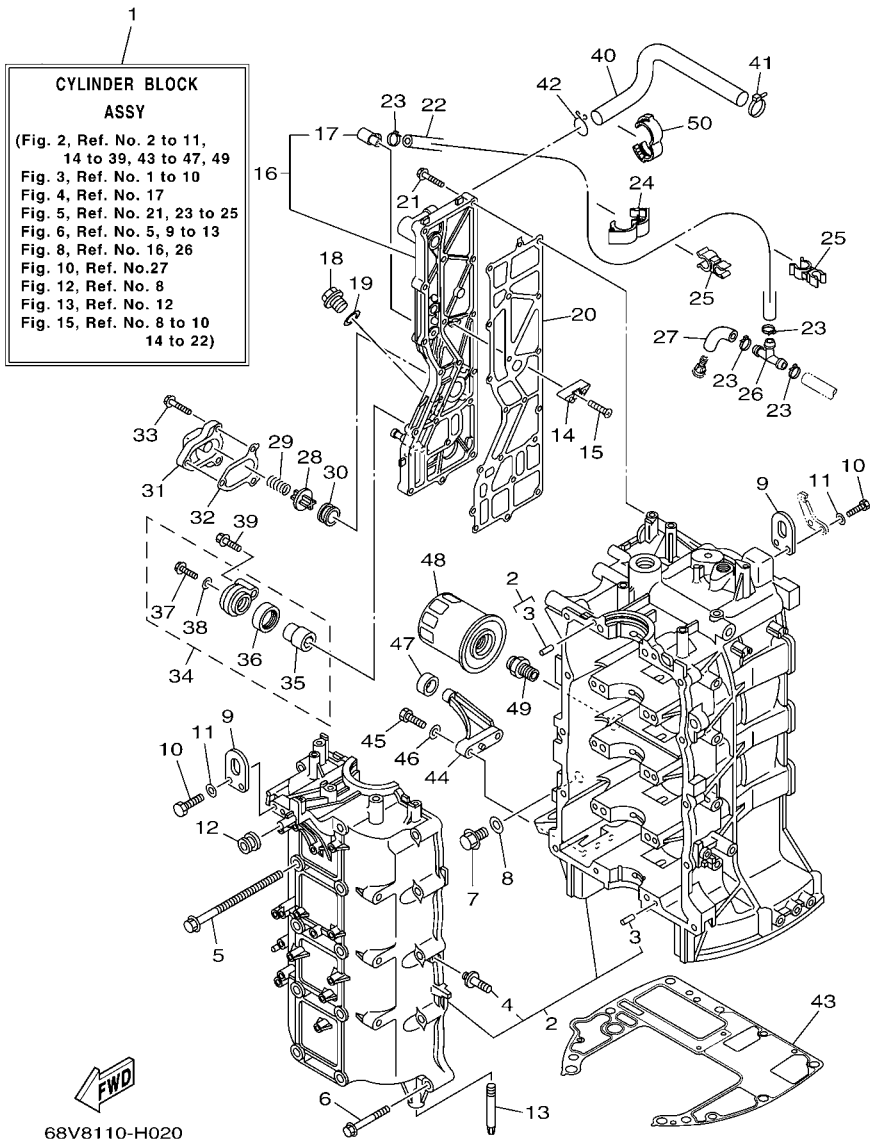

FIG. 2 CYLINDER & CRANKCASE 1

REF. NO.	PART NO.	DESCRIPTION	68V8	68W8				REMARKS
1	68V–W009B–08–9S	CYLINDER BLOCK ASSY	1	1				
2	68V–15100–02–9S	CRANKCASE ASSY	1	1				
3	93606–12019	.PIN, DOWEL	10	10				
4	68V–44581–01	.BOLT	1	1				
5	90119–10M88	BOLT, WITH WASHER	10	10				
6	90119–08M66	BOLT, WITH WASHER	10	10				
7	90340–14M06	PLUG, STRAIGHT SCREW	1	1				
8	90430–14115	GASKET	1	1				
9	62Y–11119–00	HANGER, ENGINE	2	2				
10	97095–06020	BOLT	4	4				
11	92995–06600	WASHER	4	4				
12	90480–12072	GROMMET	1	1				
13	67F–15142–00	GUIDE 1	2	2				
14	6E5–11325–00	ANODE	3	3				
15	98780–04016	SCREW, FLAT HEAD	3	3				
16	6D8–41113–30–9S	OUTER COVER, EXHAUST	1	1				
17	676–11372–00	.NIPPLE, HOSE	1	1				
18	90340–18M09	PLUG, STRAIGHT SCREW	1	1				
19	90430–18130	GASKET	1	1				
20	67F–41114–A2	GASKET, EXHAUST OUTER COVER	1	1				
21	90119–06MA4	BOLT, WITH WASHER	18	18				
22	68V–42541–00	PIPE 1	1	1				
23	90465–11M10	CLAMP	4	4				
24	90464–18004	CLAMP	1	1				
25	90464–10010	CLAMP	2	2				
26	688–24378–00	PIPE, JOINT 3	1	1				
27	61A–24316–00	PIPE 6	1	1				

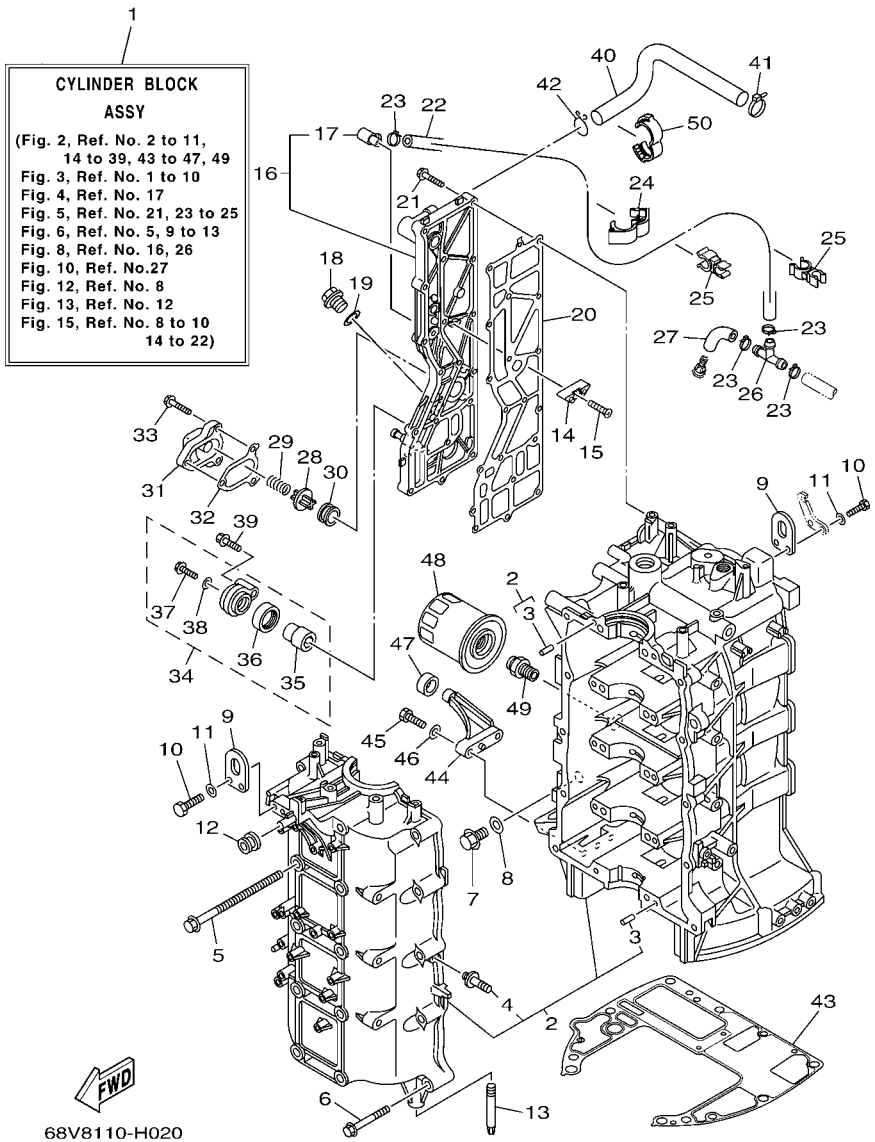

FIG. 2 CYLINDER & CRANKCASE 1

REF. NO.	PART NO.	DESCRIPTION	68V8	68W8				REMARKS
28	6G5–12416–00	VALVE, PRESSURE CONTROL	1	1				
29	90501–16M11	SPRING, COMPRESSION	1	1				
30	90480–20M05	GROMMET	1	1				
31	67F–1246A–01–9S	COVER 1	1	1				
32	67F–12435–A0	GASKET	1	1				
33	90119–06MA2	BOLT, WITH WASHER	3	3				
34	69J–11301–10	ANODE COVER ASSY	1	1				
35	68V–11325–02	.ANODE	1	1				
36	67F–11328–00	.GROMMET, ANODE	1	1				
37	90105–06M07	.BOLT, FLANGE	1	1				
38	90430–06M03	.GASKET	1	1				
39	97575–08540	BOLT, WITH WASHER	1	1				
40	67F–1243A–00	HOSE 1	1	1				
41	90465–11M10	CLAMP	1	1				
42	90467–20M15	CLIP	1	1				
43	68V–11351–00	GASKET, CYLINDER	1	1				
44	67F–42761–01–94	STOPPER	2	2				
45	97095–06025	BOLT	4	4				
46	92995–06600	WASHER	4	4				
47	68F–44533–01	DAMPER, UPPER MOUNT RUBBER	2	2				
48	5GH–13440–00	ELEMENT ASSY, OIL CLEANER	1	1				
49	90401–20007	BOLT, UNION	1	1				
50	90464–16001	CLAMP	1	1				

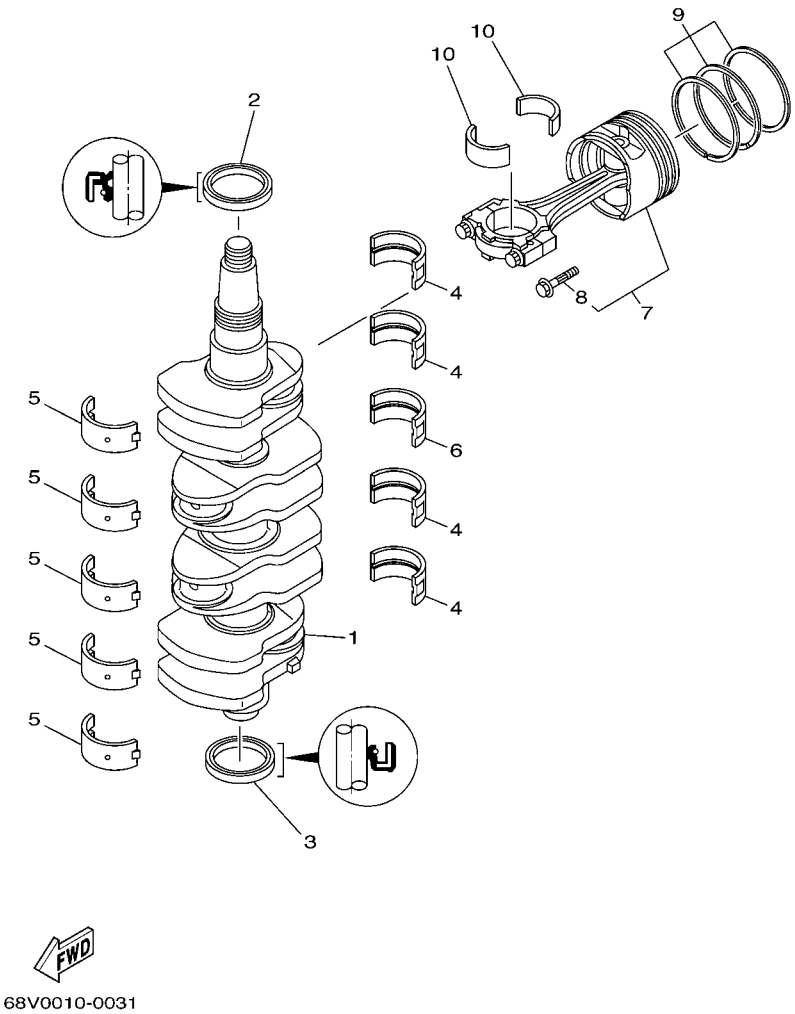

FIG. 3 CRANKSHAFT & PISTON

REF. NO.	PART NO.	DESCRIPTION	68V8	68W8				REMARKS
1	68V–11411–00	CRANKSHAFT	1	1				
2	93102–48009	OIL SEAL	1	1				
3	93101–48002	OIL SEAL	1	1				
4	67F–11416–00	PLANE BEARING, CRANKSHAFT 1	4	4				UR GREEN
	67F–11416–10	PLANE BEARING, CRANKSHAFT 1	4	4				UR BLUE
	67F–11416–20	PLANE BEARING, CRANKSHAFT 1	4	4				UR RED
5	67F–11417–00	PLANE BEARING, CRANKSHAFT 2	5	5				UR YELLOW
	67F–11417–10	PLANE BEARING, CRANKSHAFT 2	5	5				UR GREEN
	67F–11417–20	PLANE BEARING, CRANKSHAFT 2	5	5				UR BLUE
	67F–11417–30	PLANE BEARING, CRANKSHAFT 2	5	5				UR RED
6	67F–11418–00	PLANE BEARING, CRANKSHAFT 3	1	1				UR GREEN
	67F–11418–10	PLANE BEARING, CRANKSHAFT 3	1	1				UR BLUE
	67F–11418–20	PLANE BEARING, CRANKSHAFT 3	1	1				UR RED
7	68V–W1164–01	PISTON/CON-ROD ASSY(STD)	4	4				
	68V–W1164–11	PISTON/CON-ROD ASSY(0.25MM OS)	4	4				AP
8	K1C–A3275–00	.BOLT, CONNECTING ROD	2	2				
9	6D8–11603–01	PISTON RING SET (STD)	4	4				
	6D8–11604–01	PISTON RING SET (0.25MM O/S)	4	4				AP
10	68V–11656–00	PLANE BEARING, CONNECTING ROD	8	8				UR YELLOW
	68V–11656–10	PLANE BEARING, CONNECTING ROD	8	8				UR GREEN
	68V–11656–20	PLANE BEARING, CONNECTING ROD	8	8				UR BLUE
	68V–11656–30	PLANE BEARING, CONNECTING ROD	8	8				UR RED

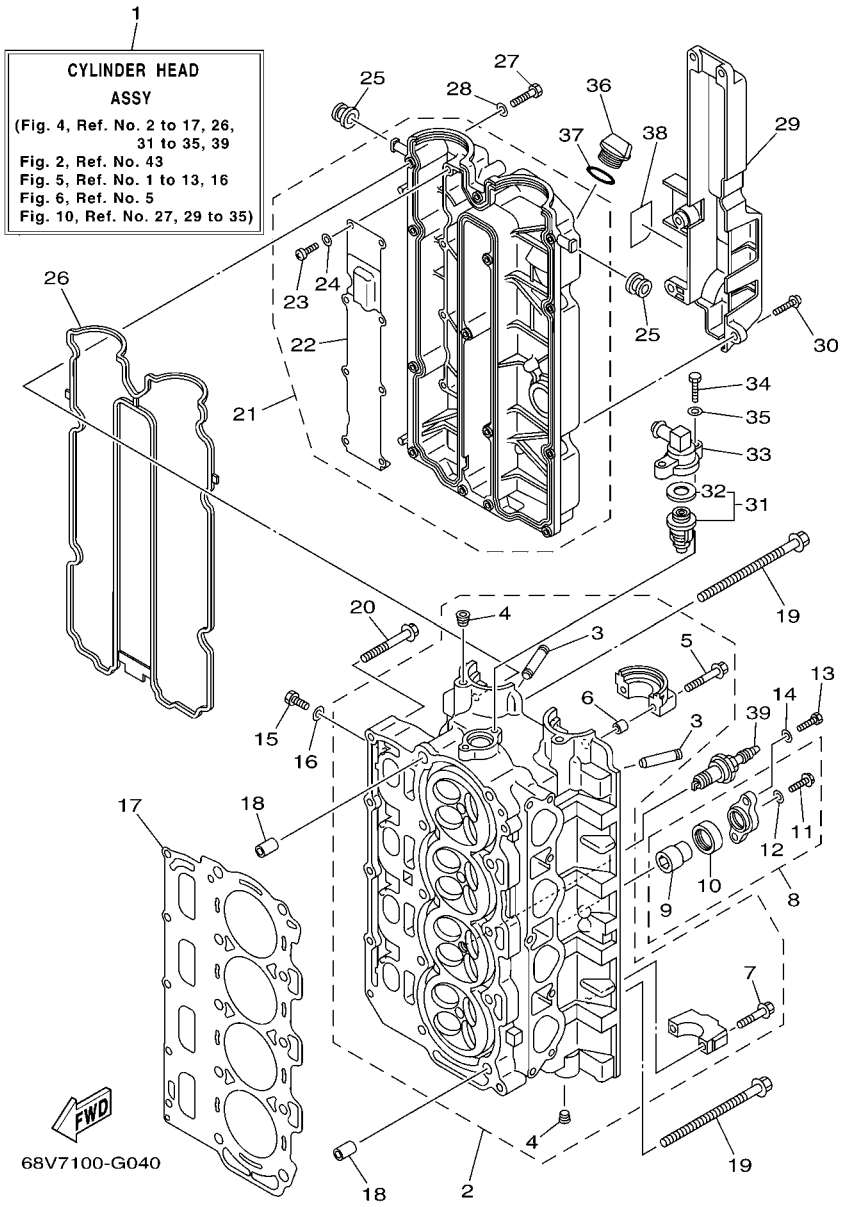

FIG. 4 CYLINDER & CRANKCASE 2

REF. NO.	PART NO.	DESCRIPTION	68V8	68W8				REMARKS
1	68V–W009A–05–9S	CYLINDER HEAD ASSY	1	1				
2	68V–11110–03–9S	CYLINDER HEAD ASSY	1	1				
3	67F–11133–10	.GUIDE, VALVE 1	16	16				
4	90344–51019	.PLUG, TAPER SCREW	4	4				
5	90119–07235	.BOLT/WASHER-CAM CAPS	4	4				
6	91809–08006	.PIN, DOWEL	4	4				
7	90119–07234	.BOLT, WITH WASHER	16	16				
8	67F–11301–10	ANODE COVER ASSY	2	2				
9	68V–11325–02	.ANODE	1	1				
10	67F–11328–00	.GROMMET, ANODE	1	1				
11	90105–06M07	.BOLT, FLANGE	1	1				
12	90430–06M03	.GASKET	1	1				
13	97075–08025	BOLT	4	4				
14	92995–08600	WASHER	4	4				
15	97095–08014	BOLT	4	4				
16	90430–08143	GASKET	4	4				
17	67F–11181–03	GASKET, CYLINDER HEAD 1	1	1				
18	90387–10M08	COLLAR	2	2				
19	90105–10M89	BOLT, FLANGE	10	10				
20	90119–08M91	BOLT, WITH WASHER	5	5				
21	68V–11191–00–9S	COVER, CYLINDER HEAD 1	1	1				
22	67F–11168–00	.COVER, BREATHER	1	1				
23	98507–04008	.SCREW, PAN HEAD	8	8				
24	92907–04600	.WASHER	8	8				
25	90480–12072	GROMMET	2	2				
26	6D8–11356–01	SEAL, CYLINDER 2	1	1				
27	97095–06030	BOLT	14	14				

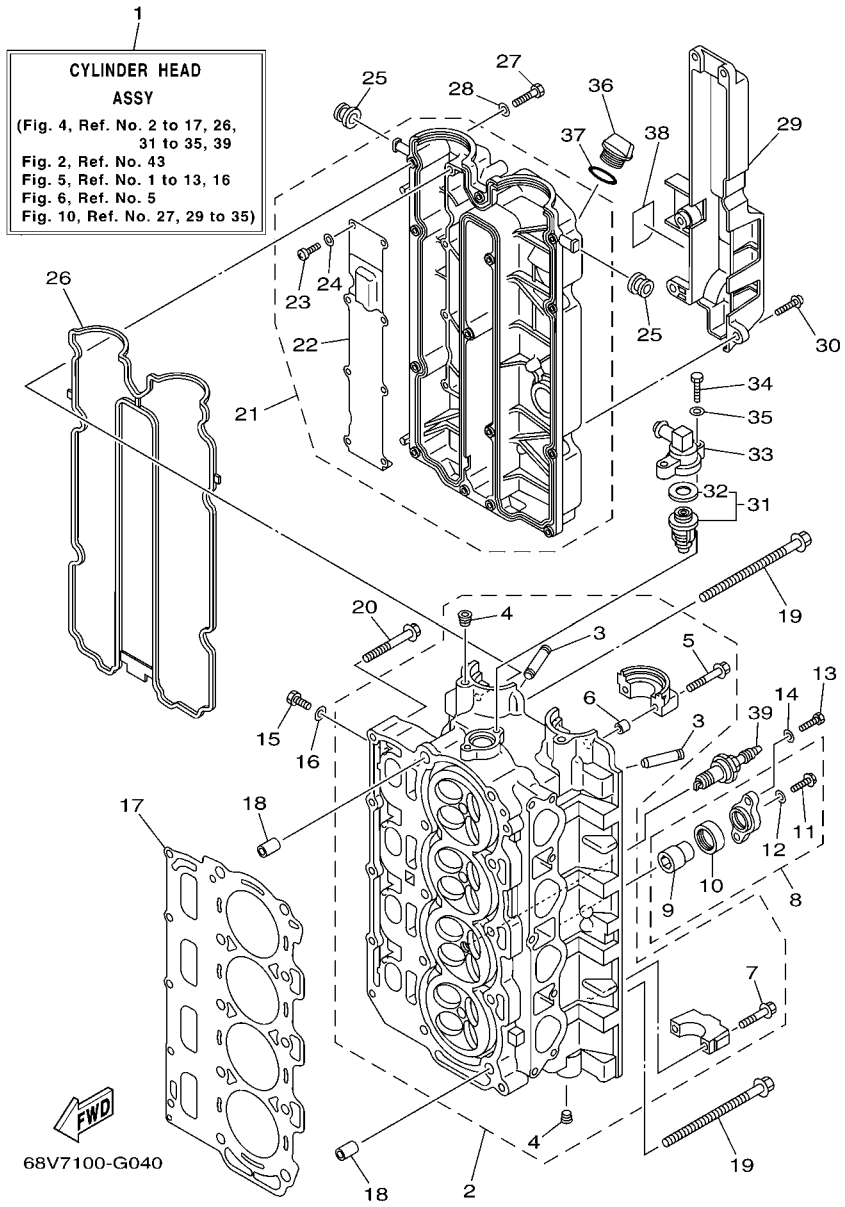

FIG. 4 CYLINDER & CRANKCASE 2

REF. NO.	PART NO.	DESCRIPTION	68V8	68W8				REMARKS
28	92995–06600	WASHER	14	14				
29	67F–11192–01	COVER, CYLINDER HEAD 2	1	1				
30	90159–06M29	SCREW, WITH WASHER	5	5				
31	60V–12411–00	THERMOSTAT	1	1				
32	67F–12412–00	.SEAL, THERMOSTAT	1	1				
33	68V–12413–00–9S	COVER, THERMOSTAT	1	1				
34	97095–06025	BOLT	2	2				
35	92995–06600	WASHER	2	2				
36	6G8–15363–00	PLUG, OIL	1	1				
37	93210–24M79	O-RING	1	1				
38	68V–83626–00	MARK 6	1	1				
39	94702–00400	PLUG, SPARK (NGK LFR6A-11)	4	4				

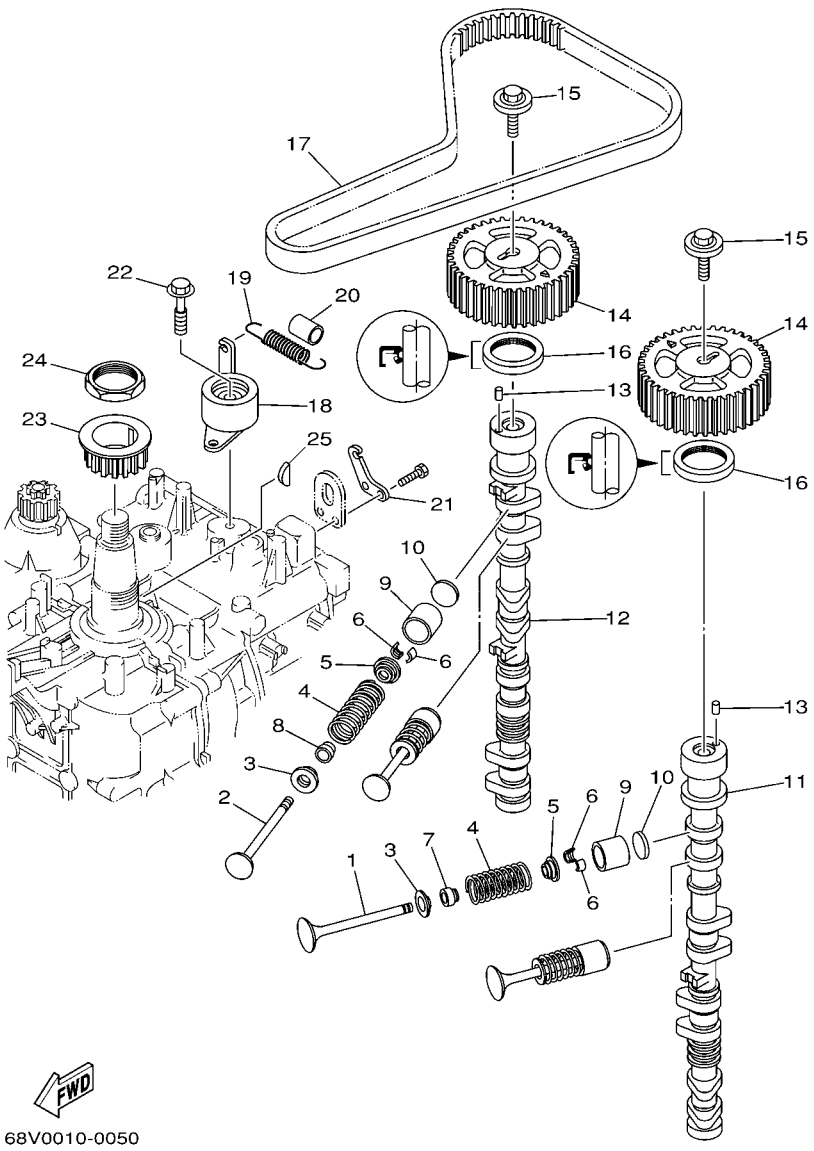

FIG. 5 VALVE

REF. NO.	PART NO.	DESCRIPTION	68V8	68W8				REMARKS
1	68V–12111–00	VALVE, INTAKE	8	8				
2	68V–12121–00	VALVE, EXHAUST	8	8				
3	67F–12116–00	SEAT, VALVE SPRING	16	16				
4	67F–12114–00	SPRING, VALVE OUTER	16	16				
5	67F–12117–00	RETAINER, VALVE SPRING	16	16				
6	67F–12118–00	COTTER, VALVE	32	32				
7	K0A–A3721–00	SEAL, VALVE STEM	8	8				
8	K0A–A3722–00	SEAL, VALVE STEM 2	8	8				
9	67F–12153–00	LIFTER, VALVE	16	16				
10	67F–12168–00	PAD, ADJUSTING (2.000)	16	16				UR
	67F–12168–10	PAD, ADJUSTING (2.025)	16	16				UR
	67F–12168–20	PAD, ADJUSTING (2.050)	16	16				UR
	67F–12168–30	PAD, ADJUSTING (2.075)	16	16				UR
	67F–12168–40	PAD, ADJUSTING (2.100)	16	16				UR
	67F–12168–50	PAD, ADJUSTING (2.125)	16	16				UR
	67F–12168–60	PAD, ADJUSTING (2.150)	16	16				UR
	67F–12168–70	PAD, ADJUSTING (2.175)	16	16				UR
	67F–12168–80	PAD, ADJUSTING (2.200)	16	16				UR
	67F–12168–A0	PAD, ADJUSTING (2.225)	16	16				UR
	67F–12168–B0	PAD, ADJUSTING (2.250)	16	16				UR
	67F–12168–C0	PAD, ADJUSTING (2.275)	16	16				UR
	67F–12168–D0	PAD, ADJUSTING (2.300)	16	16				UR
	67F–12168–E0	PAD, ADJUSTING (2.325)	16	16				UR
	67F–12168–F0	PAD, ADJUSTING (2.350)	16	16				UR
	67F–12168–G0	PAD, ADJUSTING (2.375)	16	16				UR
	67F–12168–H0	PAD, ADJUSTING (2.400)	16	16				UR
	67F–12168–J0	PAD, ADJUSTING (2.425)	16	16				UR

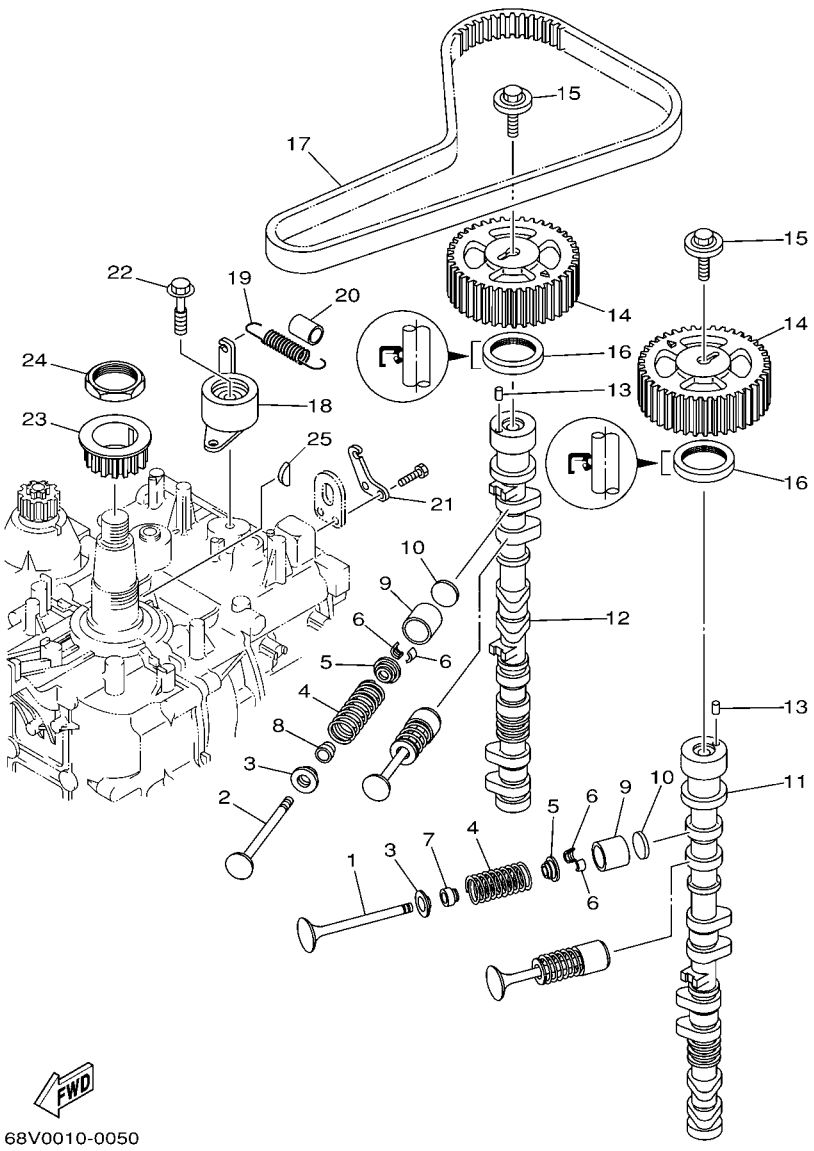

FIG. 5 VALVE

REF. NO.	PART NO.	DESCRIPTION	68V8	68W8				REMARKS
10	67F–12168–K0	PAD, ADJUSTING (2.450)	16	16				UR
	67F–12168–L0	PAD, ADJUSTING (2.475)	16	16				UR
	67F–12168–M0	PAD, ADJUSTING (2.500)	16	16				UR
	67F–12168–N0	PAD, ADJUSTING (2.525)	16	16				UR
	67F–12168–P0	PAD, ADJUSTING (2.550)	16	16				UR
	67F–12168–R0	PAD, ADJUSTING (2.575)	16	16				UR
	67F–12168–S0	PAD, ADJUSTING (2.600)	16	16				UR
	67F–12168–T0	PAD, ADJUSTING (2.625)	16	16				UR
	67F–12168–U0	PAD, ADJUSTING (2.650)	16	16				UR
	67F–12168–V0	PAD, ADJUSTING (2.675)	16	16				UR
	67F–12168–W0	PAD, ADJUSTING (2.700)	16	16				UR
	67F–12168–X0	PAD, ADJUSTING (2.725)	16	16				UR
	67F–12168–Y0	PAD, ADJUSTING (2.750)	16	16				UR
	67F–12169–00	PAD, ADJUSTING (2.775)	16	16				UR
	67F–12169–10	PAD, ADJUSTING (2.800)	16	16				UR
	67F–12169–20	PAD, ADJUSTING (2.825)	16	16				UR
	67F–12169–30	PAD, ADJUSTING (2.850)	16	16				UR
	67F–12169–40	PAD, ADJUSTING (2.875)	16	16				UR
	67F–12169–50	PAD, ADJUSTING (2.900)	16	16				UR
	67F–12169–60	PAD, ADJUSTING (2.925)	16	16				UR
	67F–12169–70	PAD, ADJUSTING (2.950)	16	16				UR
	67F–12169–80	PAD, ADJUSTING (2.975)	16	16				UR
	67F–12169–A0	PAD, ADJUSTING (3.000)	16	16				UR
	67F–12169–B0	PAD, ADJUSTING (3.025)	16	16				UR
	67F–12169–C0	PAD, ADJUSTING (3.050)	16	16				UR
	67F–12169–D0	PAD, ADJUSTING (3.075)	16	16				UR
	67F–12169–E0	PAD, ADJUSTING (3.100)	16	16				UR

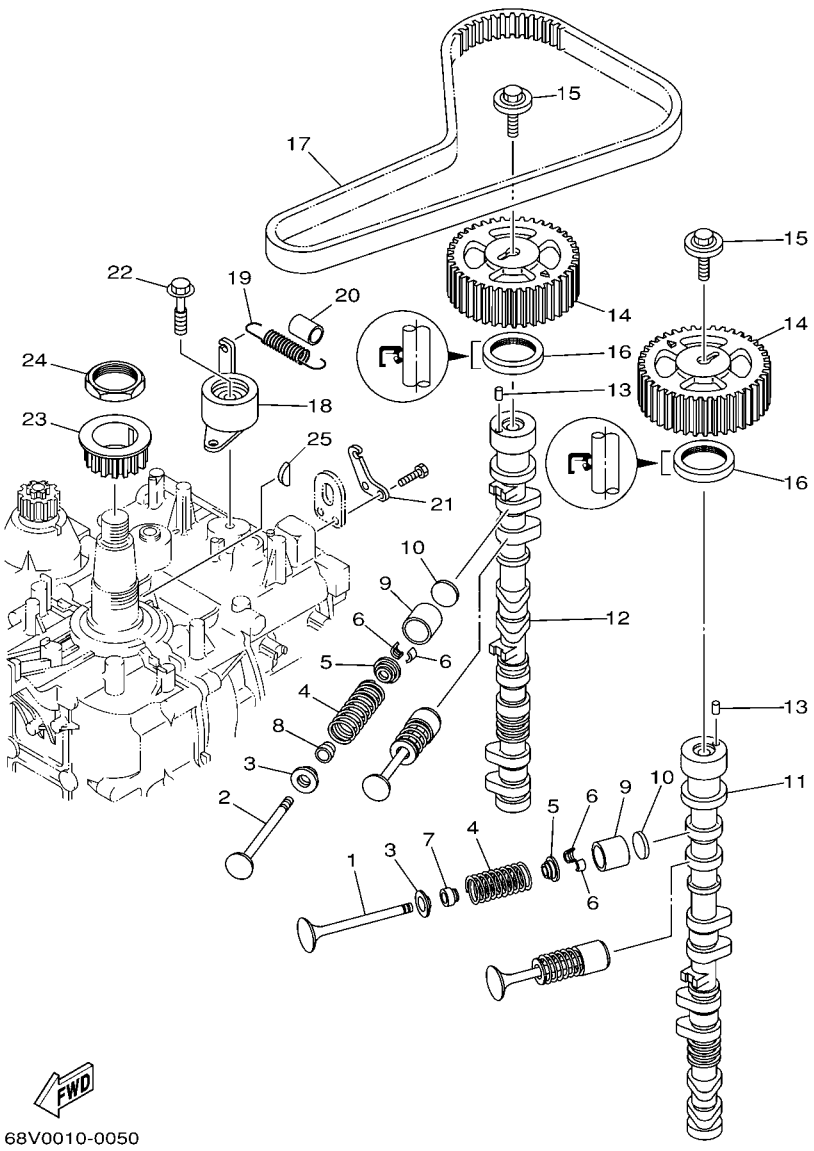

FIG. 5 VALVE

REF. NO.	PART NO.	DESCRIPTION	68V8	68W8				REMARKS
10	67F–12169–F0	PAD, ADJUSTING (3.125)	16	16				UR
	67F–12169–G0	PAD, ADJUSTING (3.150)	16	16				UR
	67F–12169–H0	PAD, ADJUSTING (3.175)	16	16				UR
	67F–12169–J0	PAD, ADJUSTING (3.200)	16	16				UR
	67F–12169–K0	PAD, ADJUSTING (3.225)	16	16				UR
	67F–12169–L0	PAD, ADJUSTING (3.250)	16	16				UR
	67F–12169–M0	PAD, ADJUSTING (3.275)	16	16				UR
	67F–12169–N0	PAD, ADJUSTING (3.300)	16	16				UR
11	67F–12171–00	CAMSHAFT 1	1	1				
12	67F–12181–00	CAMSHAFT 2	1	1				
13	93605–10108	PIN, DOWEL	2	2				
14	67F–11537–00	GEAR, DRIVEN	2	2				
15	68V–12157–00	BOLT	2	2				
16	93102–38M59	OIL SEAL	2	2				
17	67F–46241–00	BELT	1	1				
18	67F–11590–00	TENSIONER ASSY	1	1				
19	90506–16M39	SPRING, TENSION	1	1				
20	90445–15M03	HOSE (L23)	1	1				
21	67F–11595–00	PLATE,VALVE	1	1				
22	90119–10M72	BOLT, WITH WASHER	1	1				
23	6D8–11536–00	GEAR, DRIVE	1	1				
24	90170–40008	NUT	1	1				
25	90280–04008	KEY, WOODRUFF	1	1				

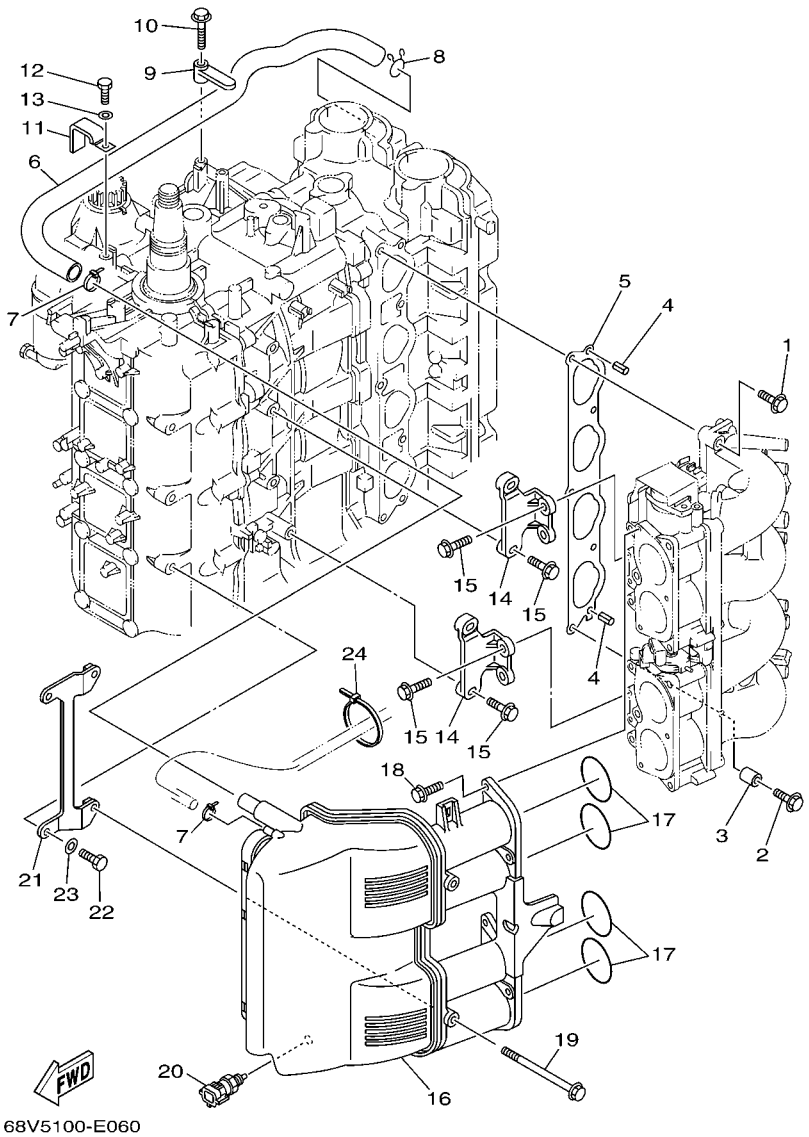

FIG. 6 INTAKE 1

REF. NO.	PART NO.	DESCRIPTION	68V8	68W8				REMARKS
1	97575–08540	BOLT, WITH WASHER	4	4				
2	90119–08M68	BOLT, WITH WASHER	1	1				
3	90387–08M32	COLLAR	1	1				
4	91690–50014	PIN, SPRING	2	2				
5	68V–13645–00	GASKET, MANIFOLD 1	1	1				
6	67F–15373–00	PIPE, BREATHER	1	1				
7	90465–11M10	CLAMP	2	2				
8	90467–20M15	CLIP	1	1				
9	6D8–82544–00	CLAMP	1	1				
10	95895–06025	BOLT, FLANGE	1	1				
11	90465–12M03	CLAMP	1	1				
12	97095–06012	BOLT	1	1				
13	92995–06600	WASHER	1	1				
14	68V–14291–00–94	BRACKET 1	2	2				
15	90119–06M49	BOLT, WITH WASHER	8	8				
16	68V–14440–00	SILENCER ASSY, INTAKE	1	1				
17	93210–48MJ9	O-RING	4	4				
18	90119–06M82	BOLT, WITH WASHER	6	6				
19	90119–06ME1	BOLT, WITH WASHER	2	2				
20	65L–85886–00	THERMOSENSOR	1	1				
21	68V–14292–00	BRACKET 2	1	1				
22	97095–08020	BOLT	2	2				
23	92995–08600	WASHER	2	2				
24	90465–13M18	CLAMP	1	1				

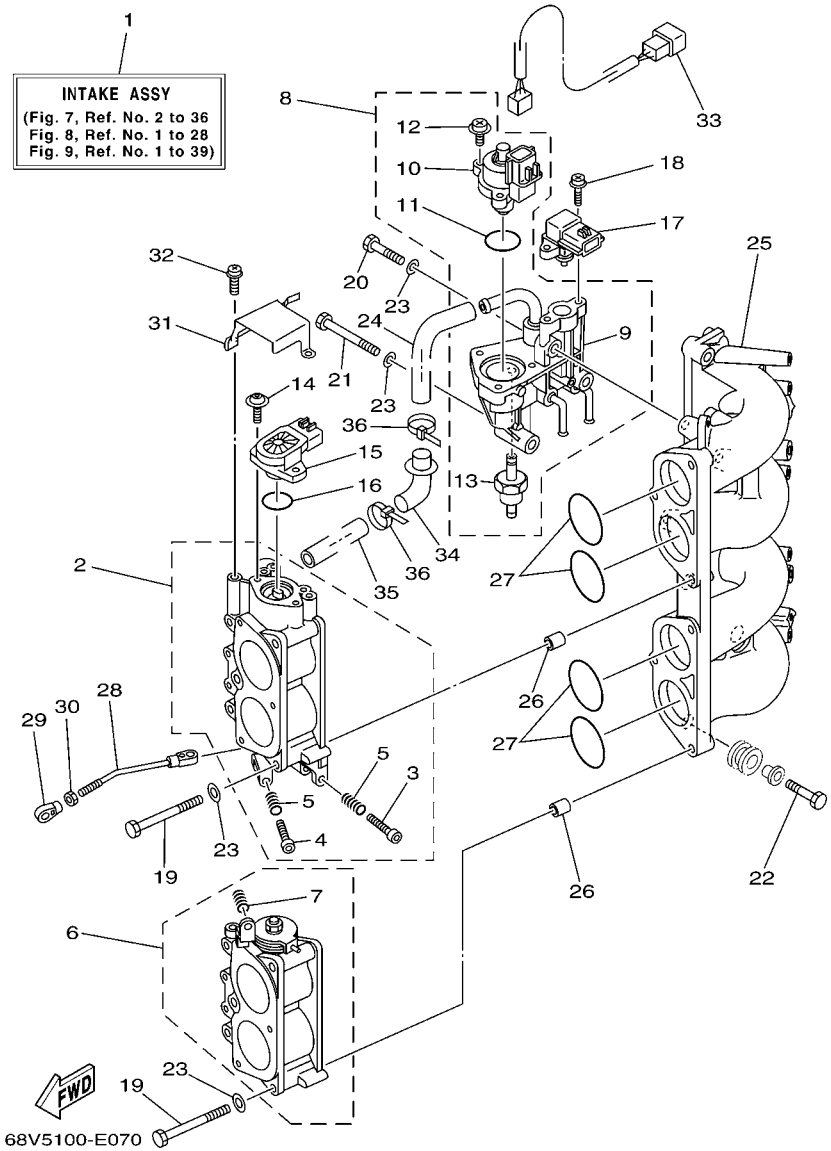

FIG. 7 INTAKE 2

REF. NO.	PART NO.	DESCRIPTION	68V8	68W8				REMARKS
1	68V–14200–21	INTAKE ASSY	1	1				EXCEPT FOR BRA
	68V–14200–31	INTAKE ASSY	1	1				FOR BRA
2	68V–13751–01	BODY, THROTTLE 1	1	1				EXCEPT FOR BRA
	68V–13751–11	BODY, THROTTLE 1	1	1				FOR BRA
3	68V–14323–00	.SCREW, AIR ADJUSTING	1	1				
4	68V–14321–00	.SCREW, THROTTLE	1	1				
5	68V–14331–00	.SPRING, THROTTLE VALVE	2	2				
6	68V–13752–01	BODY, THROTTLE 2	1	1				EXCEPT FOR BRA
	68V–13752–11	BODY, THROTTLE 2	1	1				FOR BRA
7	68V–14331–00	.SPRING, THROTTLE VALVE	1	1				
8	68V–13105–00	CONTROL VALVE ASSY	1	1				
9	68V–14960–00	.BODY ASSY	1	1				
10	68V–1312A–00	.VALVE, CONTROL	1	1				
11	68V–13473–00	.O-RING	1	1				
12	68V–81146–01	.SCREW 2	3	3				
13	68V–14511–00	.FILTER ASSY	1	1				
14	68V–81145–01	SCREW 1	2	2				
15	68V–85885–00	THROTTLE SENSOR ASSY	1	1				
16	68V–8182L–00	O-RING 1	1	1				
17	68V–82380–00	SENSOR, PRESSURE	1	1				
18	68V–81147–00	SCREW 3	2	2				
19	68V–14496–00	BOLT	6	6				
20	68V–13574–00	BOLT 2	1	1				
21	68V–13573–00	BOLT 1	2	2				
22	68V–14777–00	BOLT	3	3				
23	68V–14475–00	WASHER	9	9				
24	68V–14419–10	PIPE	1	1				

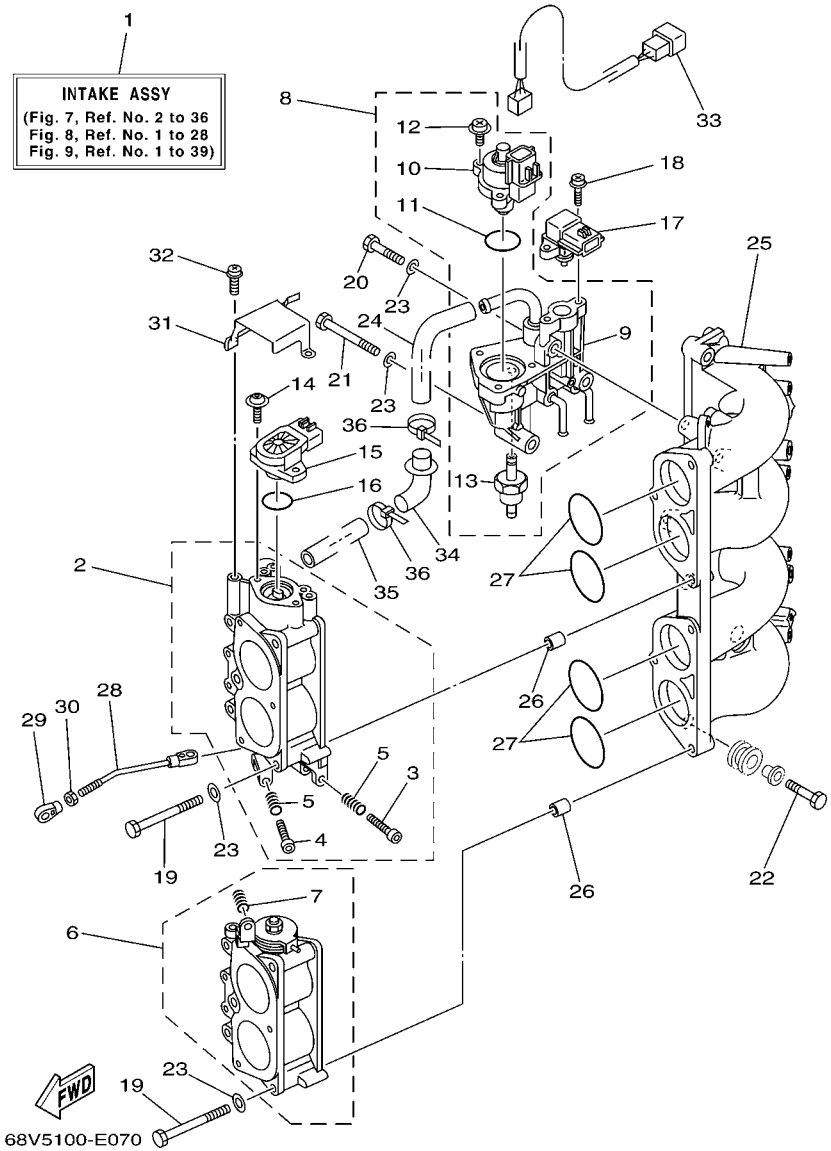

FIG. 7 INTAKE 2

REF. NO.	PART NO.	DESCRIPTION	68V8	68W8				REMARKS
25	68V–13641–00–94	MANIFOLD 1	1	1				
26	99530–10114	PIN, DOWEL	4	4				
27	93210–48MG8	O-RING	4	4				
28	68V–41237–00	JOINT, LINK	1	1				
29	6H4–41237–00	JOINT, LINK	1	1				
30	95380–05700	NUT	1	1				
31	68V–1441L–00	BRACKET 1	1	1				
32	68V–81145–00	SCREW 1	3	3				
33	68V–8259N–00	WIRE HARNESS ASSY 3	1	1				
34	68V–14453–00	JOINT, AIR CLEANER 1	1	1				
35	68V–1441J–00	PIPE, SILENCER	1	1				
36	68V–2417H–00	CLAMP 1	2	2				

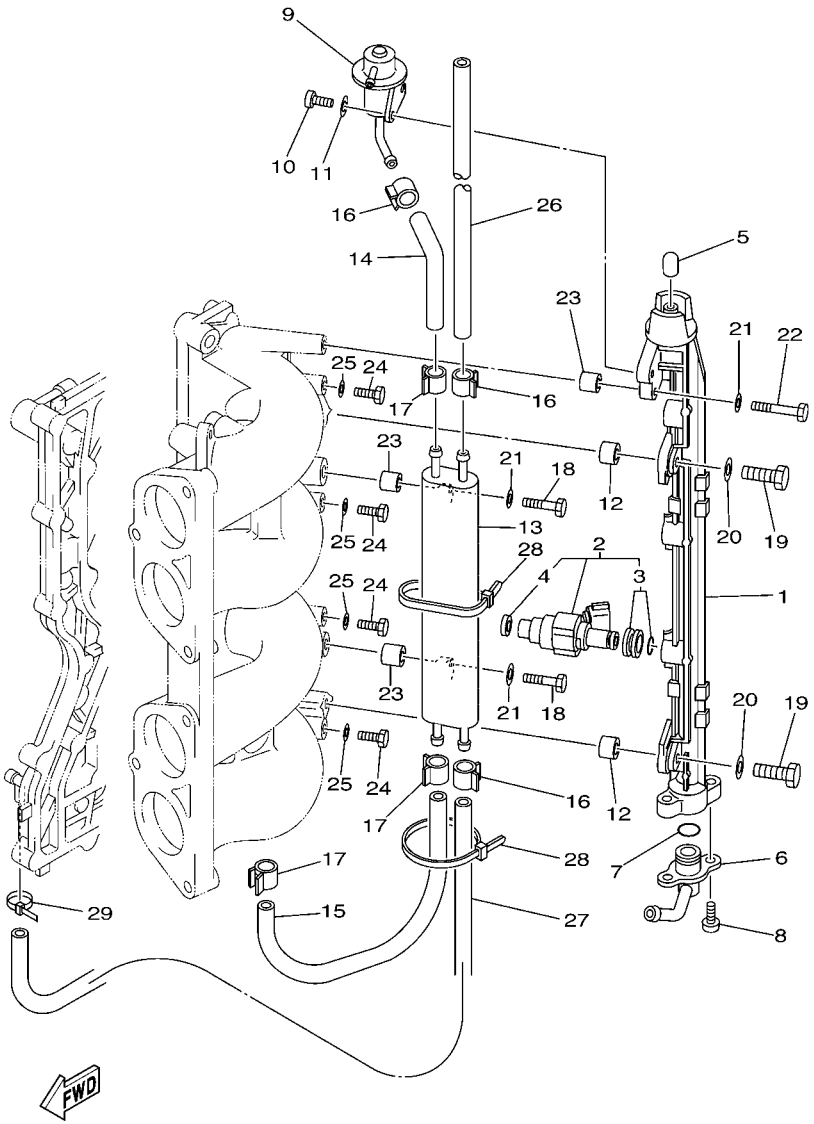

FIG. 8 FUEL INJECTION NOZZLE

REF. NO.	PART NO.	DESCRIPTION	68V8	68W8				REMARKS
1	68V–13160–00	DELIVERY PIPE ASSY 1	1	1				EXCEPT FOR BRA
	68V–13160–10	DELIVERY PIPE ASSY 1	1	1				FOR BRA
2	68V–8A360–00	INJECTOR UNIT	4	4				EXCEPT FOR BRA
	68V–8A360–10	INJECTOR UNIT	4	4				FOR BRA
3	68V–1410B–00	.PACKING KIT	1	1				
4	68V–13766–00	.RUBBER, INJECTOR	1	1				EXCEPT FOR BRA
	68V–13766–10	.RUBBER, INJECTOR	1	1				FOR BRA
5	68V–14225–00	CAP	1	1				
6	68V–13435–00	NIPPLE	1	1				
7	68V–14397–00	O-RING	1	1				EXCEPT FOR BRA
	68V–14397–10	O-RING	1	1				FOR BRA
8	68V–81147–00	SCREW 3	2	2				
9	68V–13906–01	REGULATOR, PRESSURE	1	1				
10	68V–14565–00	SCREW	2	2				
11	68V–14356–00	WASHER, SPRING	2	2				
12	68V–14264–00	COLLAR	2	2				
13	69J–21841–02	COOLER	1	1				
14	68V–13971–00	PIPE, FUEL 1	1	1				EXCEPT FOR BRA
	68V–13971–10	PIPE, FUEL 1	1	1				FOR BRA
15	68V–13972–00	PIPE, FUEL 2	1	1				EXCEPT FOR BRA
	68V–13972–10	PIPE, FUEL 2	1	1				FOR BRA
16	68V–24519–00	CLIP	3	3				
17	68V–2411M–00	CLIP	3	3				
18	68V–14777–00	BOLT	2	2				
19	68V–14428–00	BOLT	2	2				
20	68V–14475–00	WASHER	2	2				
21	68V–14357–00	WASHER, PLAIN	3	3				

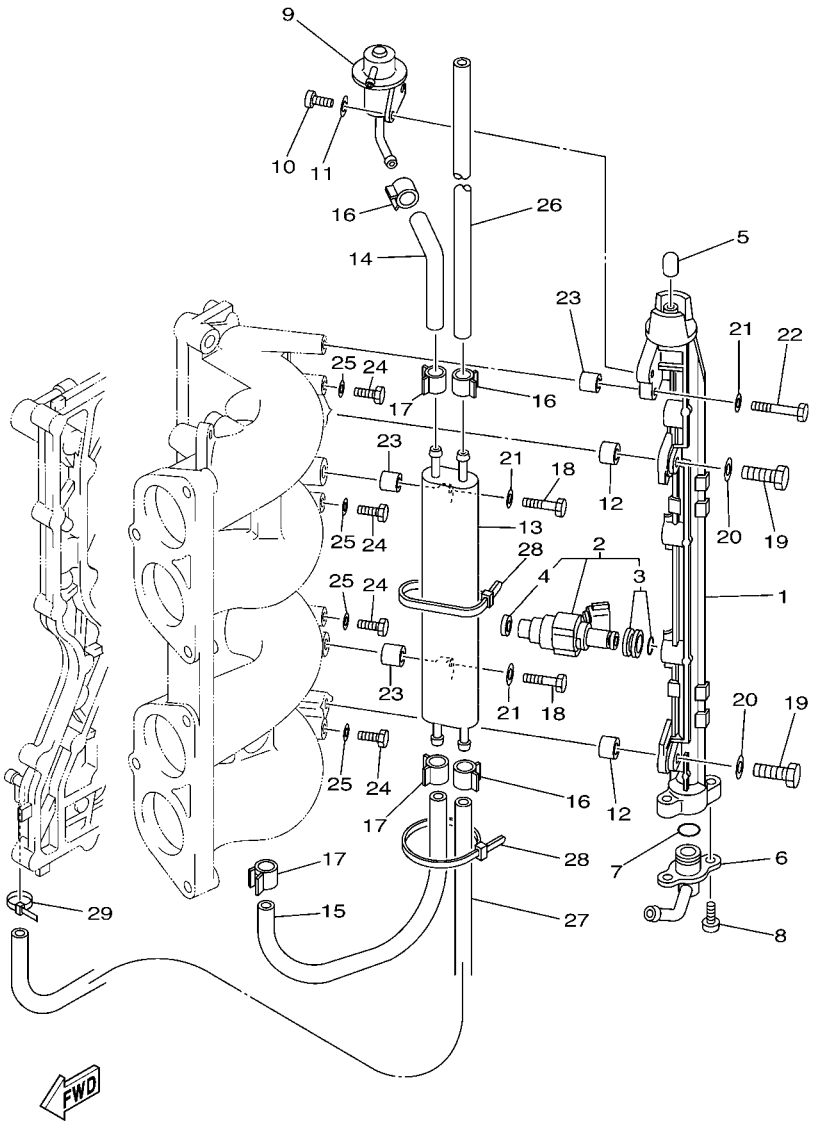

FIG. 8 FUEL INJECTION NOZZLE

REF. NO.	PART NO.	DESCRIPTION	68V8	68W8				REMARKS
22	68V–14446–00	BOLT	1	1				
23	68V–14265–00	COLLAR	3	3				
24	97095–06010	BOLT	4	4				
25	90430–06014	GASKET	4	4				
26	68V–2247A–10	HOSE 1	1	1				
27	68V–2247B–00	HOSE 2	1	1				
28	68V–2481H–00	CLAMP	2	2				
29	90465–11M10	CLAMP	1	1				

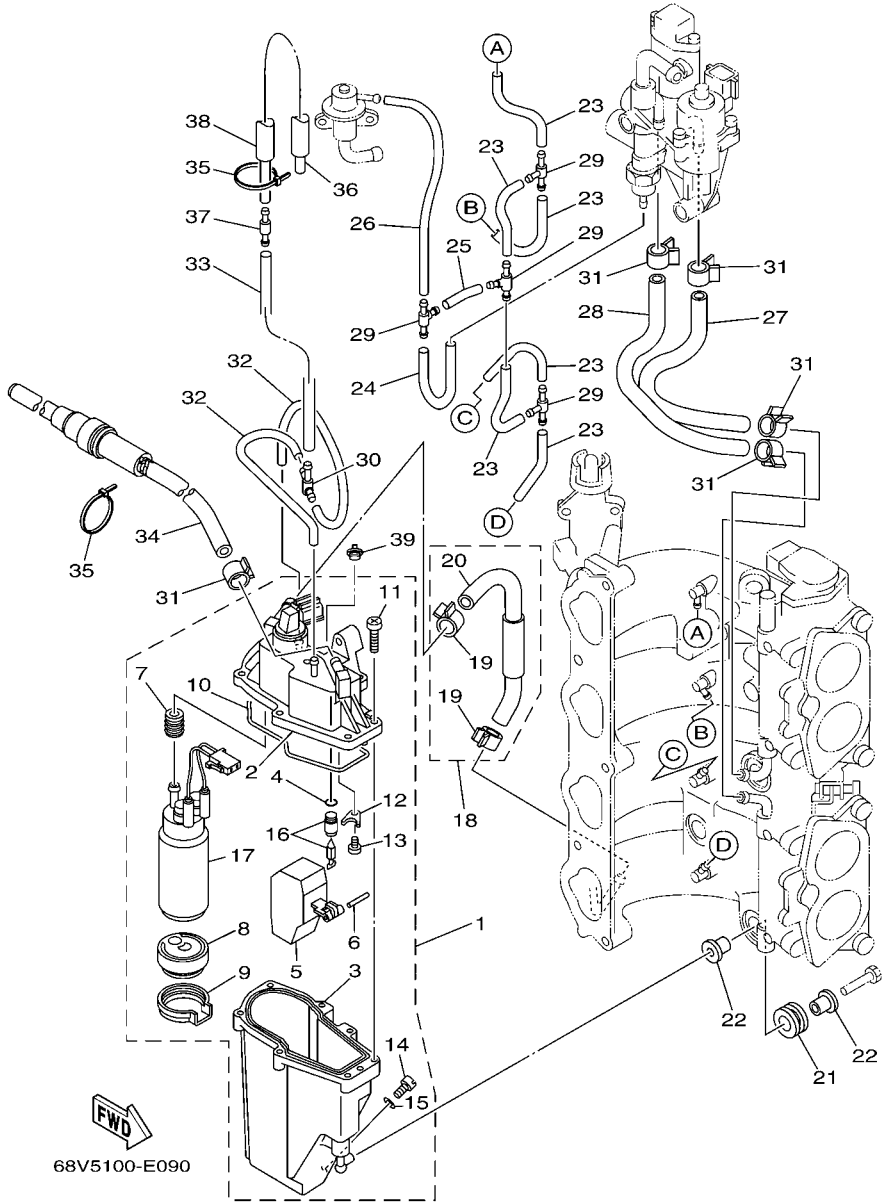

FIG. 9 FUEL INJECTION PUMP

REF. NO.	PART NO.	DESCRIPTION	68V8	68W8				REMARKS
1	68V–14180–03	FLOAT CHAMBER ASSY	1	1				EXCEPT FOR BRA
	68V–14180–11	FLOAT CHAMBER ASSY	1	1				FOR BRA
2	68V–14182–01	.COVER, FLOAT CHAMBER	1	1				EXCEPT FOR BRA
	68V–14182–10	.COVER, FLOAT CHAMBER	1	1				FOR BRA
3	68V–14181–00	.BODY, FLOAT CHAMBER 1	1	1				EXCEPT FOR BRA
	68V–14181–10	.BODY, FLOAT CHAMBER 1	1	1				FOR BRA
4	68V–13769–00	.O-RING	1	1				EXCEPT FOR BRA
	68V–13769–10	.O-RING	1	1				FOR BRA
5	68V–14985–00	.FLOAT	1	1				
6	68V–14386–00	.PIN, FLOAT	1	1				
7	68V–13781–10	.DAMPER, PUMP	1	1				
8	68V–13915–00	.FILTER	1	1				EXCEPT FOR BRA
	68V–13915–10	.FILTER	1	1				FOR BRA
9	68V–13784–00	.COVER, PUMP	1	1				
10	68V–14984–00	.GASKET, FLOAT CHAMBER	1	1				EXCEPT FOR BRA
	68V–14984–10	.GASKET, FLOAT CHAMBER	1	1				FOR BRA
11	68V–14567–00	.SCREW	7	7				
12	68V–14255–00	.PLATE	1	1				EXCEPT FOR BRA
	68V–14255–10	.PLATE	1	1				FOR BRA
13	68V–14592–00	.SCREW	1	1				EXCEPT FOR BRA
	68V–14592–10	.SCREW	1	1				FOR BRA
14	68V–14191–00	.PLUG, DRAIN	1	1				
15	68V–14126–00	.GASKET	1	1				
16	68V–14546–00	.VALVE, NEEDLE	1	1				EXCEPT FOR BRA
	68V–14546–10	.VALVE, NEEDLE	1	1				FOR BRA
17	68V–13907–03	.FUEL PUMP COMP.	1	1				EXCEPT FOR BRA
	68V–13907–11	.FUEL PUMP COMP.	1	1				FOR BRA

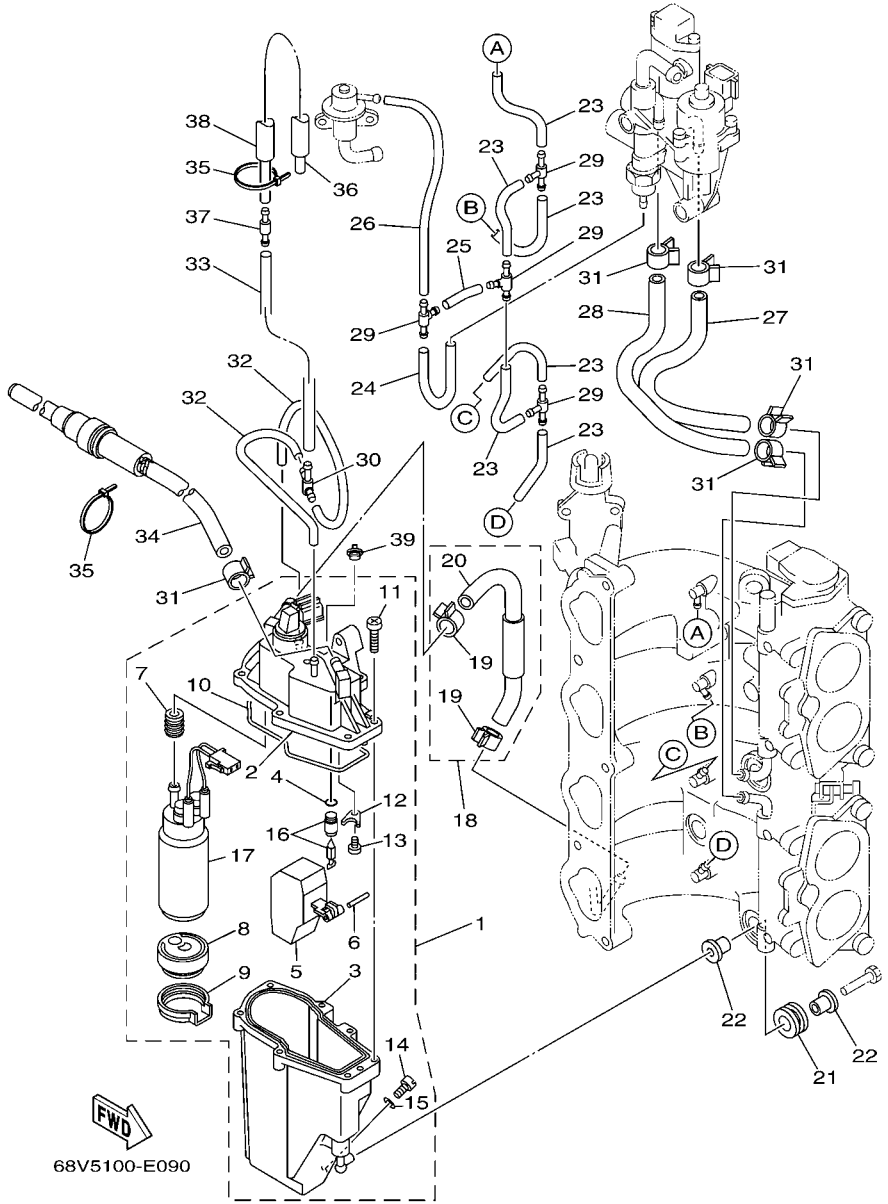

FIG. 9 FUEL INJECTION PUMP

REF. NO.	PART NO.	DESCRIPTION	68V8	68W8				REMARKS
18	68V–14807–11	HOSE COMP.	1	1				
19	68V–13577–00	.CLIP	2	2				
20	68V–13973–10	.PIPE, FUEL 3	1	1				
21	68V–13593–00	DAMPER	3	3				
22	68V–13716–00	COLLAR	6	6				
23	68V–13542–00	HOSE, VACUUM SENSING 1	6	6				
24	68V–13533–00	HOSE, VACUUM SENSING 4	1	1				
25	68V–13544–00	HOSE, VACUUM SENSING 2	1	1				
26	68V–13532–01	HOSE, VACUUM SENSING 3	1	1				
27	68V–13545–00	HOSE 1	1	1				
28	68V–13546–00	HOSE 2	1	1				
29	68V–24377–00	PIPE, JOINT 2	4	4				
30	68V–24379–00	PIPE, JOINT 4	1	1				
31	68V–13577–00	CLIP	5	5				
32	68V–13534–00	HOSE, VACUUM SENSING 5	2	2				
33	68V–13547–01	HOSE 3	1	1				
34	68V–24502–02	FILTER, FUEL	1	1				EXCEPT FOR BRA
	68V–24502–12	FILTER, FUEL	1	1				FOR BRA
35	68V–2481H–00	CLAMP	2	2				
36	68V–13535–00	HOSE, VACUUM SENSING 5	1	1				
37	68V–24460–01	RELIEF VALVE ASSY	1	1				EXCEPT FOR BRA
	68V–24460–10	RELIEF VALVE ASSY	1	1				FOR BRA
38	68V–13543–01	HOSE, AIR	1	1				
39	69J–14225–01	CAP	1	1				

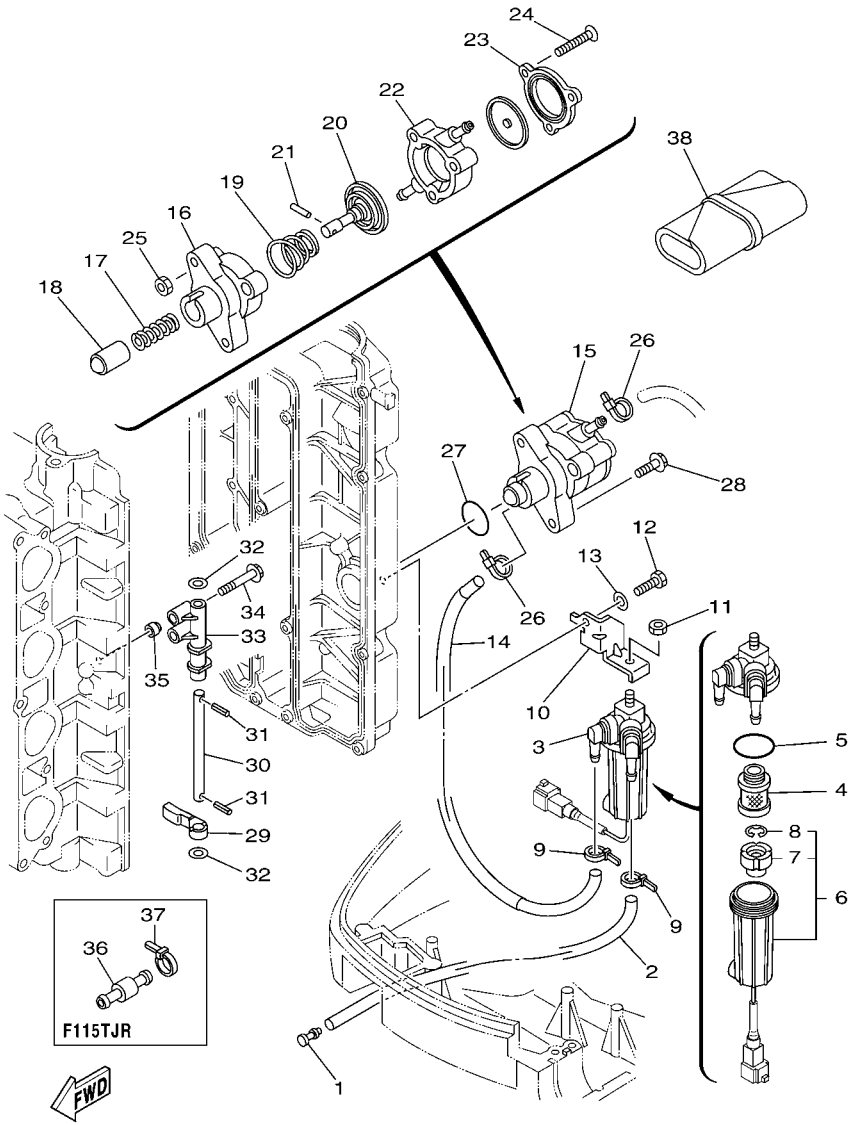

FIG. 10 FUEL 1

REF. NO.	PART NO.	DESCRIPTION	68V8	68W8				REMARKS
1	689–85547–00	DAMPER	1	1				
2	90445–13M37	HOSE (L2300)	1	1				
3	6D8–24560–00	FILTER ASSY	1	1				
4	6D8–24563–00	.ELEMENT, FILTER	1	1				
5	6D8–24564–00	.GASKET	1	1				
6	6D8–24562–00	.CUP, FILTER	1	1				
7	6D8–24469–00	..FLOAT, WATER LEVEL	1	1				
8	6D8–24519–00	..CLIP	1	1				
9	90465–11M10	CLAMP	2	2				
10	68V–24566–00	BRACKET, FILTER	1	1				
11	95380–08600	NUT	1	1				
12	97095–06016	BOLT	1	1				
13	92995–06600	WASHER	1	1				
14	68V–24311–00	PIPE, FUEL 1	1	1				
15	68V–24410–00	FUEL PUMP ASSY	1	1				
16	68V–24412–00	.BODY 1	1	1				
17	68V–24454–00	.SPRING	1	1				
18	68V–13131–00	.PLUNGER	1	1				
19	68V–24423–00	.SPRING, DIAPHRAGM	1	1				
20	68V–24411–00	.DIAPHRAGM	1	1				
21	68V–24374–00	.PIN	1	1				
22	68V–24413–00	.BODY 2	1	1				
23	68V–24414–00	.BODY 3	1	1				
24	68V–24444–00	.SCREW	3	3				
25	68V–24149–00	.NUT	3	3				
26	90465–11M10	CLAMP	2	2				
27	93210–30682	O-RING	1	1				

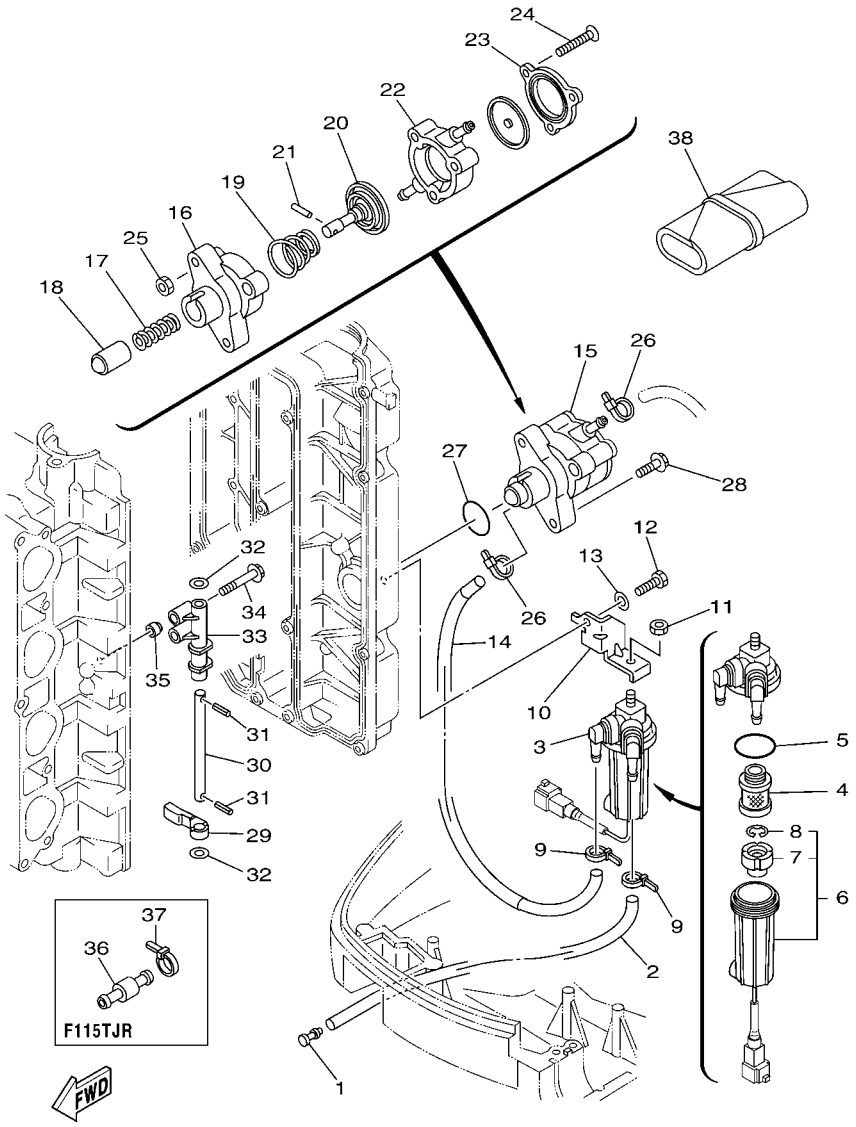

FIG. 10 FUEL 1

REF. NO.	PART NO.	DESCRIPTION	68V8	68W8				REMARKS
28	90119–06M83	BOLT, WITH WASHER	2	2				
29	67F–24575–00	LEVER, FUEL CHANGE	1	1				
30	68V–24495–00	SHAFT	1	1				
31	91609–25014	PIN, SPRING	2	2				
32	90201–08M12	WASHER, PLATE	2	2				
33	67F–24491–00	BRACKET, FUEL PUMP	1	1				
34	90119–07235	BOLT/WASHER-CAM CAPS	2	2				
35	91809–08006	PIN, DOWEL	2	2				
36	6R3–24377–10	PIPE, JOINT 2	1					F115TJR
37	90465–11M10	CLAMP	1					F115TJR
38	67F–28100–01	TOOL KIT	1	1				AP

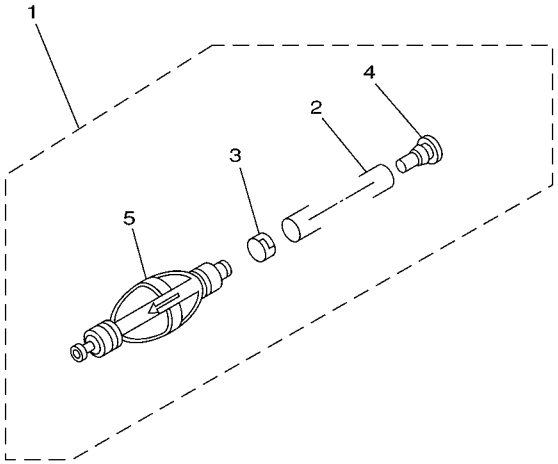

68V0100-0110

FIG. 11 FUEL 2

REF. NO.	PART NO.	DESCRIPTION	68V8	68W8				REMARKS
1	6Y2–24307–50	FUEL PIPE COMP. 2	1	1				AP EXCEPT CAR
2	90445–13M01	.HOSE (L2050)	1	1				
3	6E5–24351–51	.BAND 1	1	1				
4	90480–06M19	.GROMMET	1	1				
5	6Y2–24360–60	.PRIMER PUMP ASSY	1	1				

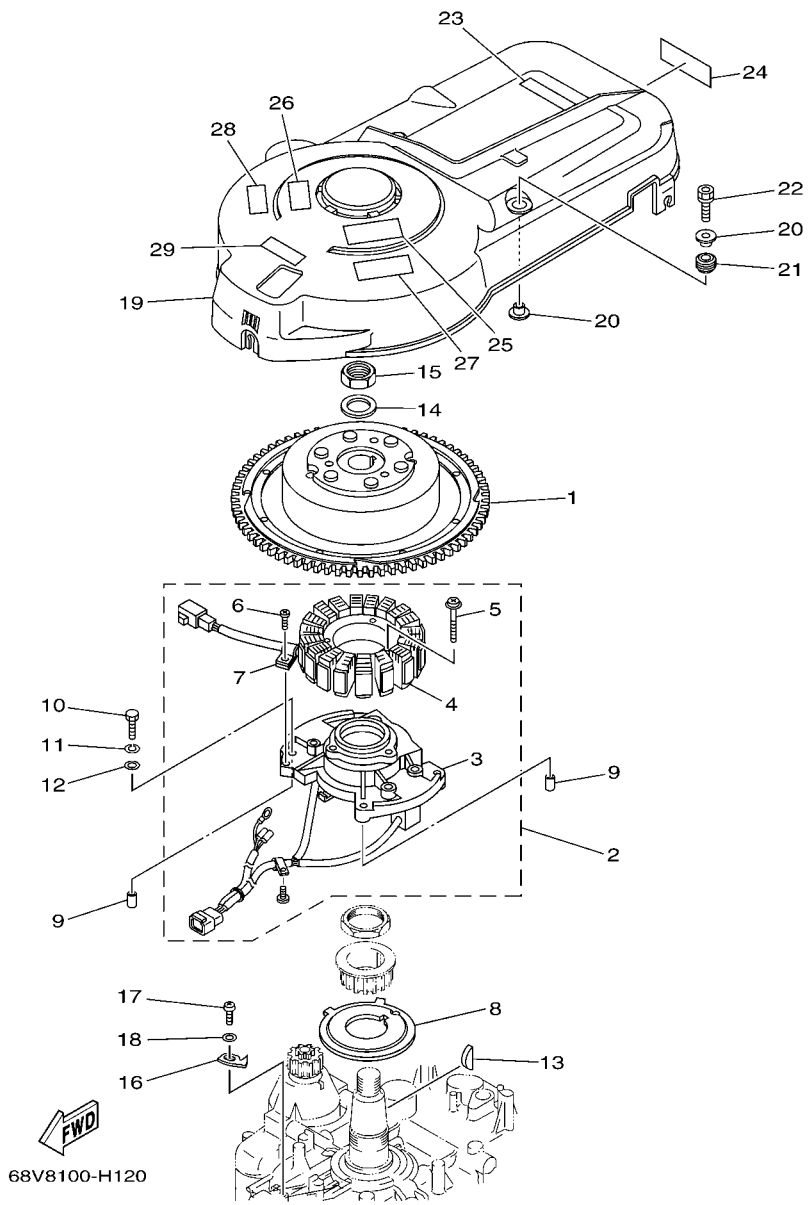

FIG. 12 GENERATOR

REF. NO.	PART NO.	DESCRIPTION	68V8	68W8				REMARKS
1	68V–81450–00	ROTOR ASSY	1	1				
2	68V–81460–00	BASE ASSY	1	1				
3	68V–85580–00	.COIL, PULSER	1	1				
4	68V–81410–00	.STATOR ASSY	1	1				
5	63D–81345–20	.SCREW, WITH WASHER (M6X30)	3	3				
6	97607–04110	.SCREW,WITH WASHER	1	1				
7	445–81328–20	.CLAMP	1	1				
8	68V–81673–00	ROTOR	1	1				
9	99530–08012	PIN, DOWEL	2	2				
10	97095–06030	BOLT	4	4				
11	92995–06100	WASHER, SPRING	4	4				
12	92995–06600	WASHER	4	4				
13	90280–04M08	KEY, WOODRUFF	1	1				
14	90201–24014	WASHER, PLATE	1	1				
15	90179–24002	NUT	1	1				
16	6D8–81332–00	PLATE, TIMING	1	1				
17	97885–06010	SCREW, PAN HEAD	1	1				
18	92995–06600	WASHER	1	1				
19	67F–81337–01	COVER, FLYWHEEL	1	1				
20	90387–06M71	COLLAR	4	4				
21	90480–15M31	GROMMET	2	2				
22	90119–06M92	BOLT, WITH WASHER	2	2				
23	67F–12138–40	MARK, CAUTION	1	1				FOR OCE
	67F–12138–50	MARK, CAUTION	1	1				FOR CAN
	67F–12138–60	MARK, CAUTION	1	1				FOR CAR,BRA
24	68V–13437–41	MARK, CAUTION	1	1				FOR OCE
	68V–13437–51	MARK, CAUTION	1	1				FOR CAN

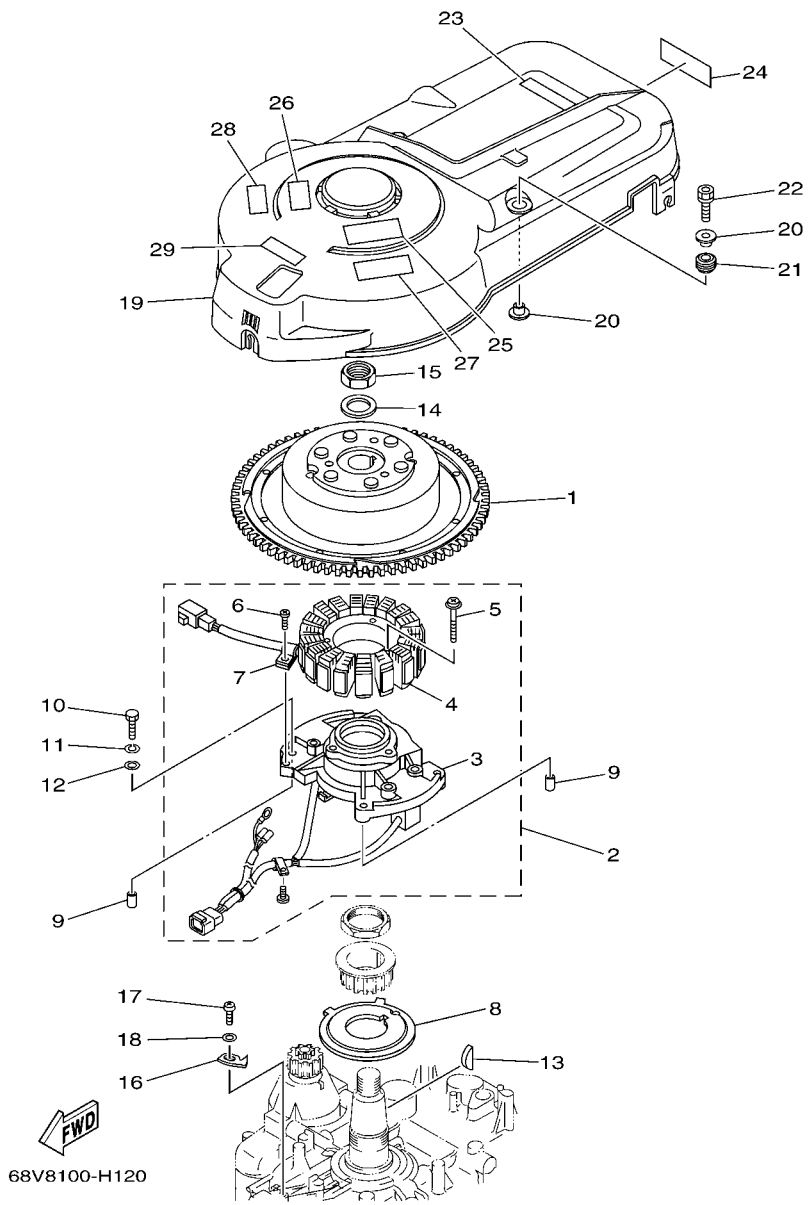

FIG. 12 GENERATOR

REF. NO.	PART NO.	DESCRIPTION	68V8	68W8				REMARKS
24	68V–13437–61	MARK, CAUTION	1	1				FOR CAR,BRA
25	6AH–81995–40	LABEL, WARNING	1	1				
26	6AH–81995–50	LABEL, WARNING	1	1				FOR CAN,CAR,BRA
27	6AH–81994–40	LABEL, SAFETY	1	1				
28	6AH–81994–50	LABEL, SAFETY	1	1				FOR CAN,CAR,BRA
29	6AG–81996–00	MARK	1	1				

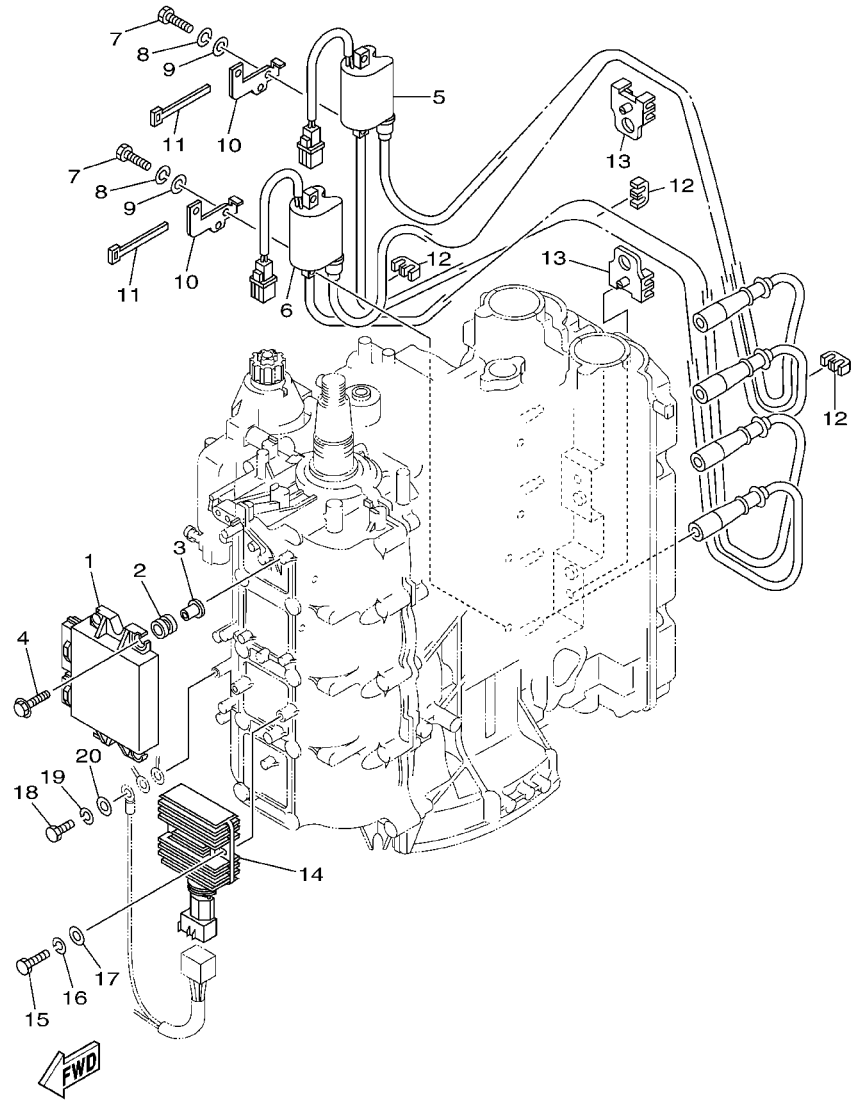

68V7100-G131

FIG. 13 ELECTRICAL 1

REF. NO.	PART NO.	DESCRIPTION	68V8	68W8				REMARKS
1	68V–8591A–42	ENGINE CONTROL UNIT ASSY	1	1				
	68V–8591A–51	ENGINE CONTROL UNIT ASSY	1	1				FOR CAR(CE)
	68V–8591A–61	ENGINE CONTROL UNIT ASSY	1	1				FOR BRA
2	68V–82317–00	DAMPER, IGNITION COIL	4	4				
3	90387–06119	COLLAR	4	4				
4	90119–06M59	BOLT, WITH WASHER	4	4				
5	68V–82310–00	IGNITION COIL ASSY	1	1				
6	68V–82310–10	IGNITION COIL ASSY	1	1				
7	97095–06025	BOLT	4	4				
8	92995–06100	WASHER, SPRING	4	4				
9	92995–06600	WASHER	4	4				
10	68V–82388–00	PLATE	2	2				
11	90464–06001	CLAMP	2	2				
12	67F–82361–00	CLAMP, CORD	3	3				
13	67F–82362–00	CLAMP, CORD 2	2	2				
14	68V–81960–10	RECTIFIER & REGULATOR ASSY	1	1				Go to P/N:PE0-OM-080064
15	97095–06025	BOLT	2	2				
16	92995–06100	WASHER, SPRING	2	2				
17	92995–06600	WASHER	2	2				
18	97095–06016	BOLT	1	1				
19	92995–06100	WASHER, SPRING	1	1				
20	92995–06600	WASHER	1	1				

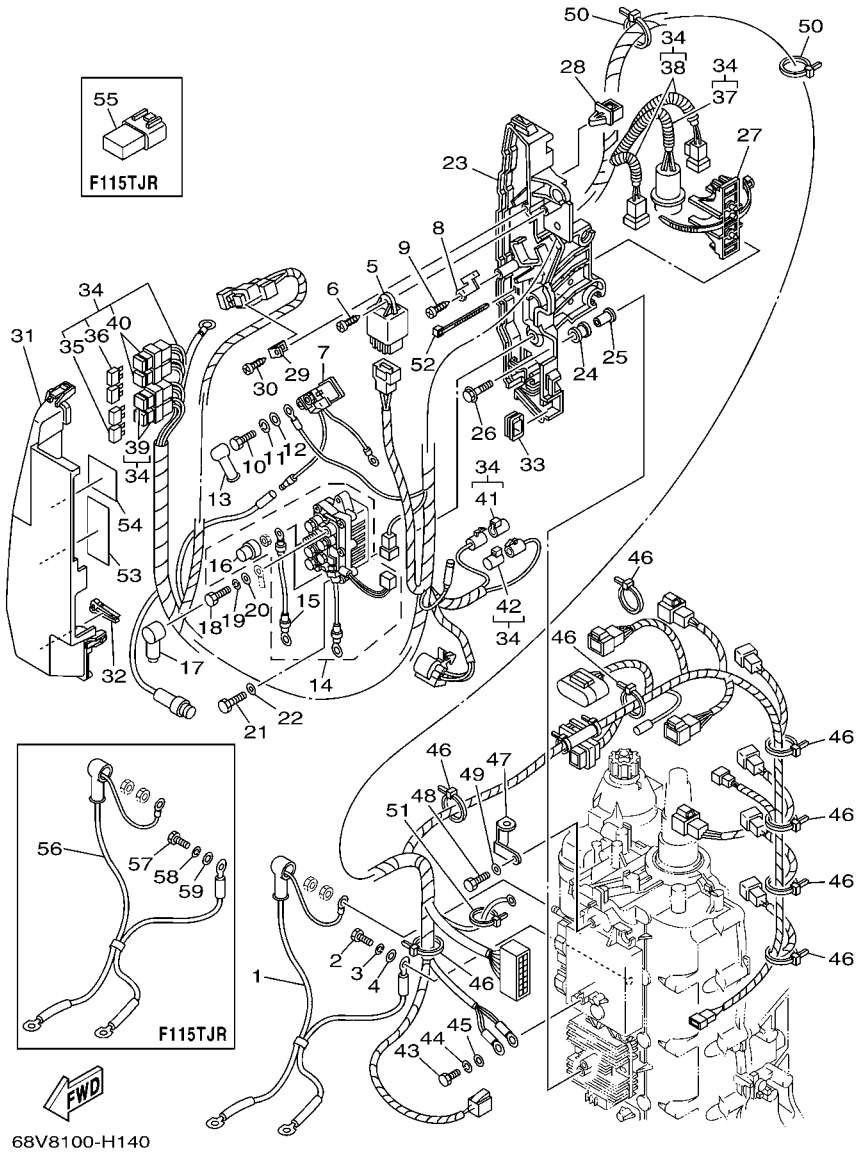

FIG. 14 ELECTRICAL 2

REF. NO.	PART NO.	DESCRIPTION	68V8	68W8				REMARKS
1	68V–82105–00	WIRE HARNESS	1	1				EXCEPT F115TJR
2	97013–06020	BOLT	1	1				EXCEPT F115TJR
3	92903–06100	WASHER, SPRING	1	1				EXCEPT F115TJR
4	92903–06600	WASHER, PLATE	1	1				EXCEPT F115TJR
5	68V–81950–00	RELAY ASSY	1	1				
6	97780–60625	SCREW, TAPPING	1	1				
7	68V–8194A–00	RELAY	1	1				
8	68V–81953–00	STAY, RELAY	1	1				
9	97780–60620	SCREW, TAPPING	1	1				
10	97095–06010	BOLT	2	2				
11	92995–06100	WASHER, SPRING	2	2				
12	92995–06600	WASHER	2	2				
13	6G5–82119–00	COVER, LEAD WIRE	2	2				
14	68V–8195B–01	RELAY ASSY	1	1				
15	68V–81949–00	.WIRE, LEAD	1	1				
16	68V–82532–00	.CAP	1	1				
17	682–82119–01	COVER, LEAD WIRE	2	2				
18	97095–06010	BOLT	2	2				
19	92995–06100	WASHER, SPRING	2	2				
20	92995–06600	WASHER	2	2				
21	97013–06020	BOLT	2	2				
22	92903–06600	WASHER, PLATE	2	2				
23	68V–81948–02	BRACKET	1	1				
24	6A0–82317–00	DAMPER, IGNITION COIL	5	5				
25	90387–06119	COLLAR	5	5				
26	90119–06M59	BOLT, WITH WASHER	5	5				
27	68V–82594–00	CLAMP	1	1				

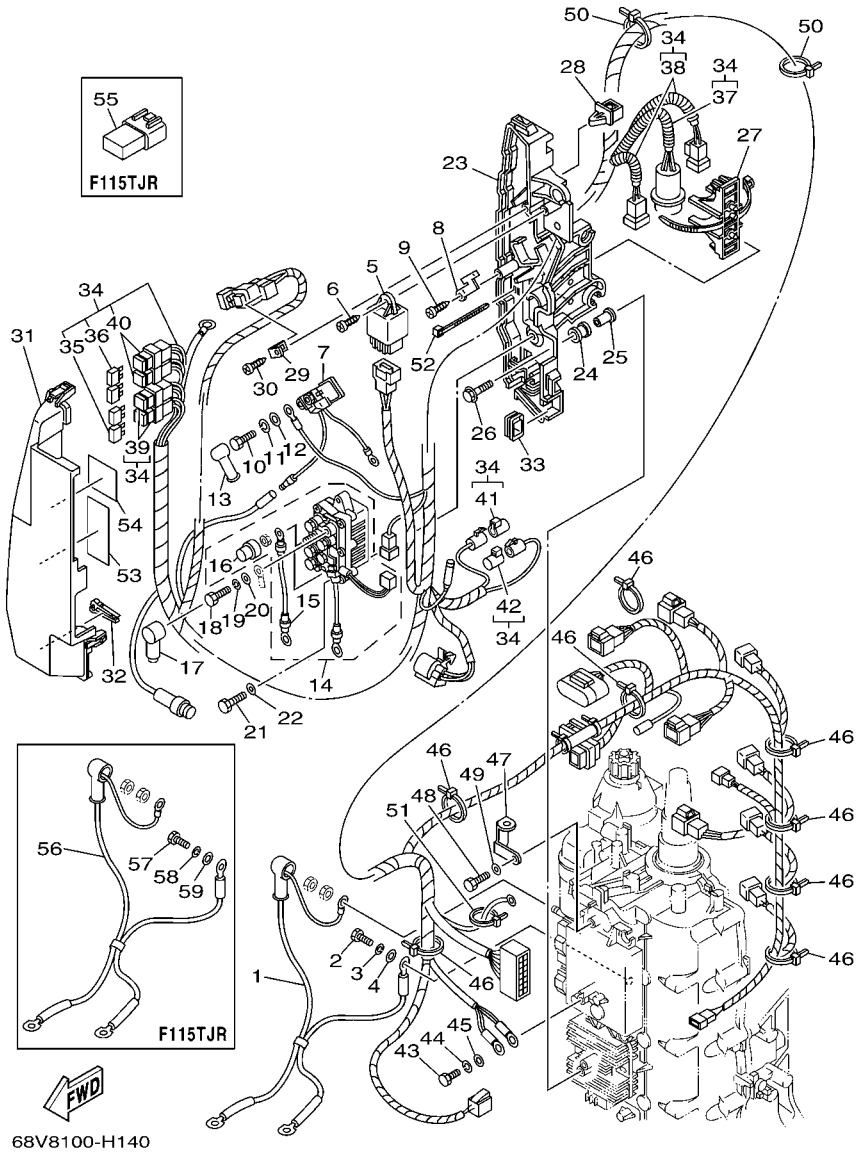

FIG. 14 ELECTRICAL 2

REF. NO.	PART NO.	DESCRIPTION	68V8	68W8				REMARKS
28	90464–12M58	CLAMP	1	1				
29	68V–85548–00	HOLDER	1	1				
30	97780–60620	SCREW, TAPPING	1	1				
31	68V–81942–03	COVER	1	1				
32	67F–2812A–00	PULLER, FUSE	1	1				
33	6D8–81518–00	GROMMET	1	1				
34	68V–82590–50	WIRE HARNESS ASSY	1	1				
35	67F–82151–00	.FUSE (20A)	4	4				
36	67F–82151–10	.FUSE (30A)	4	4				
37	90447–10003	.TUBE	1	1				
38	90447–07007	.TUBE	2	2				
39	67F–8215B–10	.CAP (YELLOW)	2	2				
40	67F–8215B–20	.CAP (GREEN)	2	2				
41	6P2–82582–00	.CAP 1 (FEMALE)	1	1				
42	6P2–82582–10	.CAP 1 (MALE)	1	1				
43	97095–06016	BOLT	1	1				
44	92995–06100	WASHER, SPRING	1	1				
45	92995–06600	WASHER	1	1				
46	90465–13M18	CLAMP	9	9				
47	6D8–82581–00	STAY, CORD CLAMP	1	1				
48	97095–06014	BOLT	1	1				
49	92995–06600	WASHER	1	1				
50	90465–11M52	CLAMP	2	2				
51	90465–13M18	CLAMP	1	1				
52	90465–13M18	CLAMP	2	2				
53	68V–81919–00	GRAPHIC, REGULATOR	1	1				
54	68V–81919–10	GRAPHIC, REGULATOR	1	1				

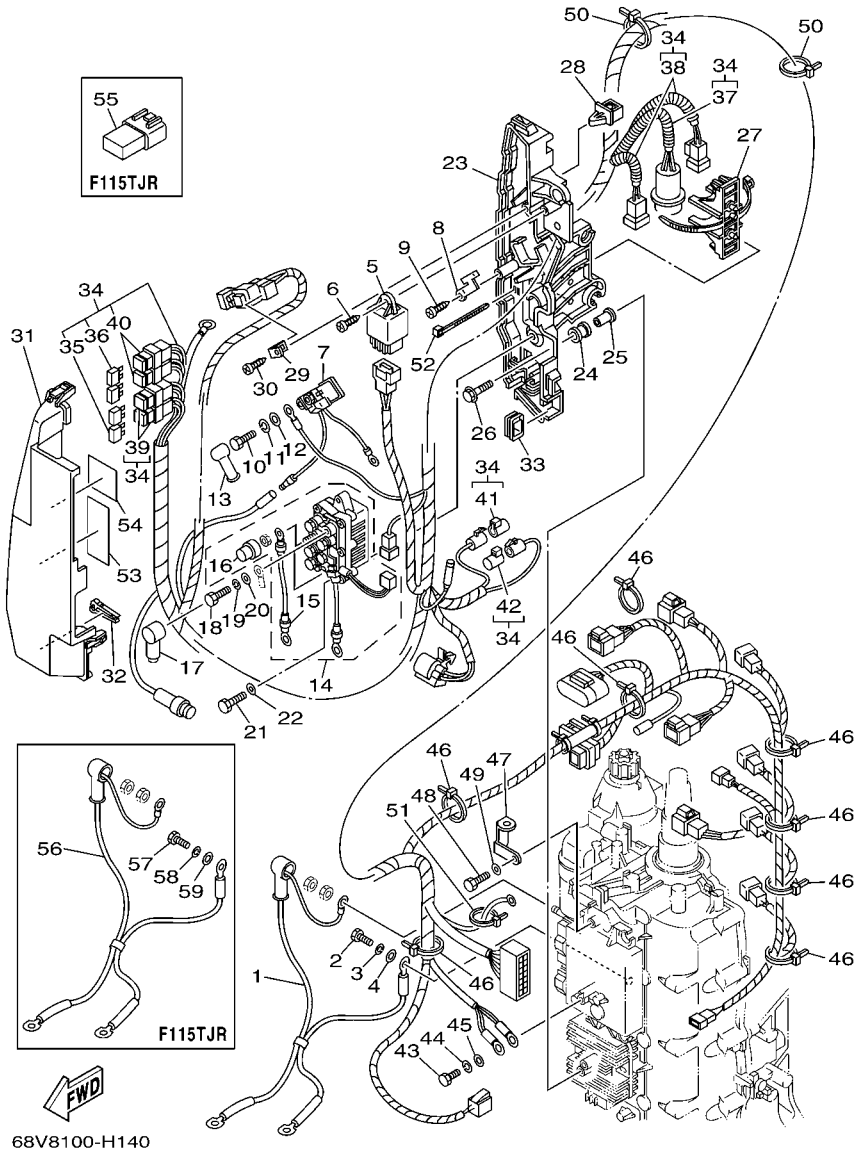

FIG. 14 ELECTRICAL 2

REF. NO.	PART NO.	DESCRIPTION	68V8	68W8				REMARKS
55	68V–82582–10	COVER, WIRE HARNESS	1					F115TJR
56	68V–82105–00	WIRE HARNESS	1					AP F115TJR
57	97013–06020	BOLT	1					AP F115TJR
58	92903–06100	WASHER, SPRING	1					AP F115TJR
59	92903–06600	WASHER, PLATE	1					AP F115TJR

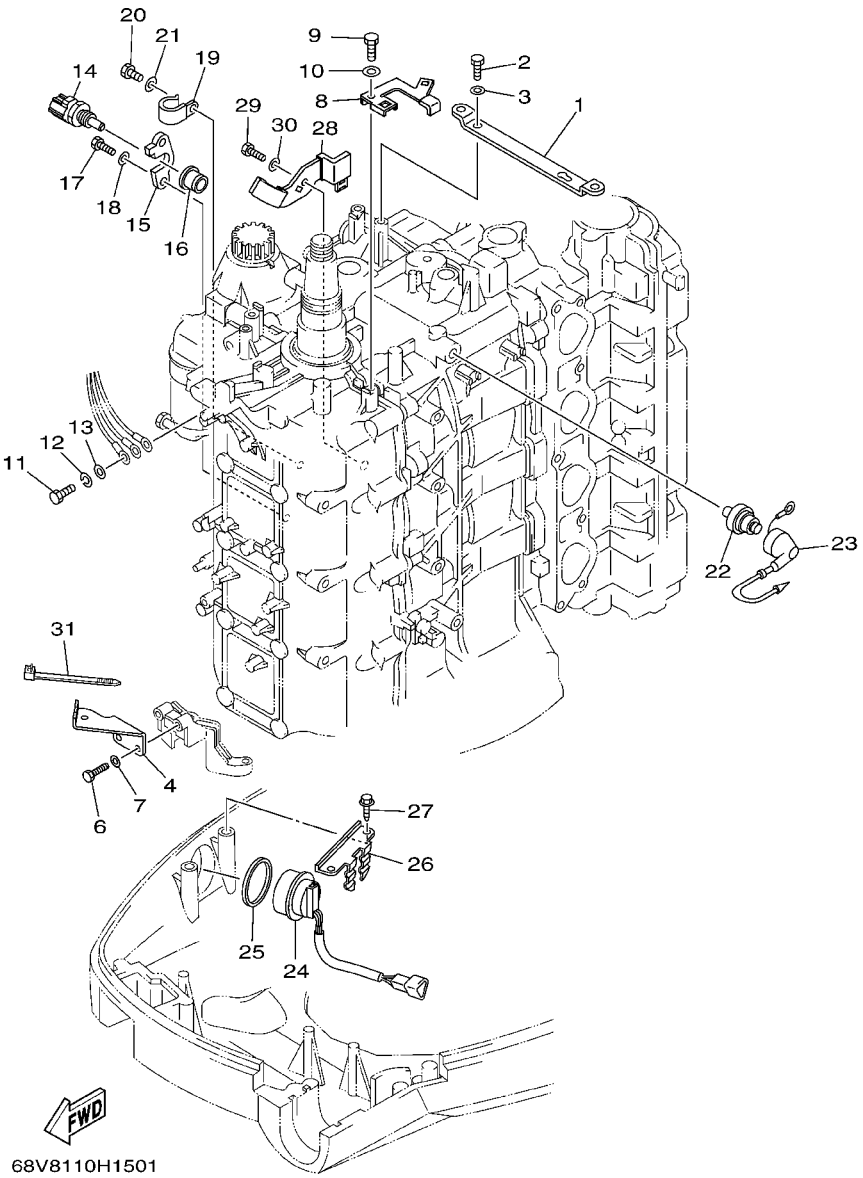

FIG. 15 ELECTRICAL 3

REF. NO.	PART NO.	DESCRIPTION	68V8	68W8				REMARKS
1	67F–8132G–01	PLATE	1	1				
2	97095–06016	BOLT	2	2				
3	92995–06600	WASHER	2	2				
4	68V–81528–00	CLAMP 1	1	1				Go to P/N:PE0-OM-080064
6	97095–06016	BOLT	2	2				Go to P/N:PE0-OM-080064
7	92995–06600	WASHER	2	2				Go to P/N:PE0-OM-080064
8	68V–82588–10	PLATE	1	1				
9	97095–06012	BOLT	1	1				
10	92995–06600	WASHER	1	1				
11	97095–06016	BOLT	1	1				
12	92995–06100	WASHER, SPRING	1	1				
13	92995–06600	WASHER	1	1				
14	67F–85790–00	THERMOSENSOR ASSY	1	1				
15	67F–85757–00	RETAINER	1	1				
16	68V–85753–00	GASKET, SENDER UNIT	1	1				
17	97095–06016	BOLT	2	2				
18	92995–06600	WASHER	2	2				
19	90465–06M86	CLAMP	1	1				
20	97095–06012	BOLT	1	1				
21	92995–06600	WASHER	1	1				
22	68V–82504–00	OIL PRESSURE SWITCH ASSY	1	1				
23	68V–81315–00	LEAD WIRE ASSY	1	1				
24	63D–82563–10	TRIM & TILT SWITCH ASSY	1	1				
25	6E5–82587–00	GASKET	1	1				
26	67F–83614–00	BRACKET	1	1				
27	90109–06M86	BOLT	2	2				

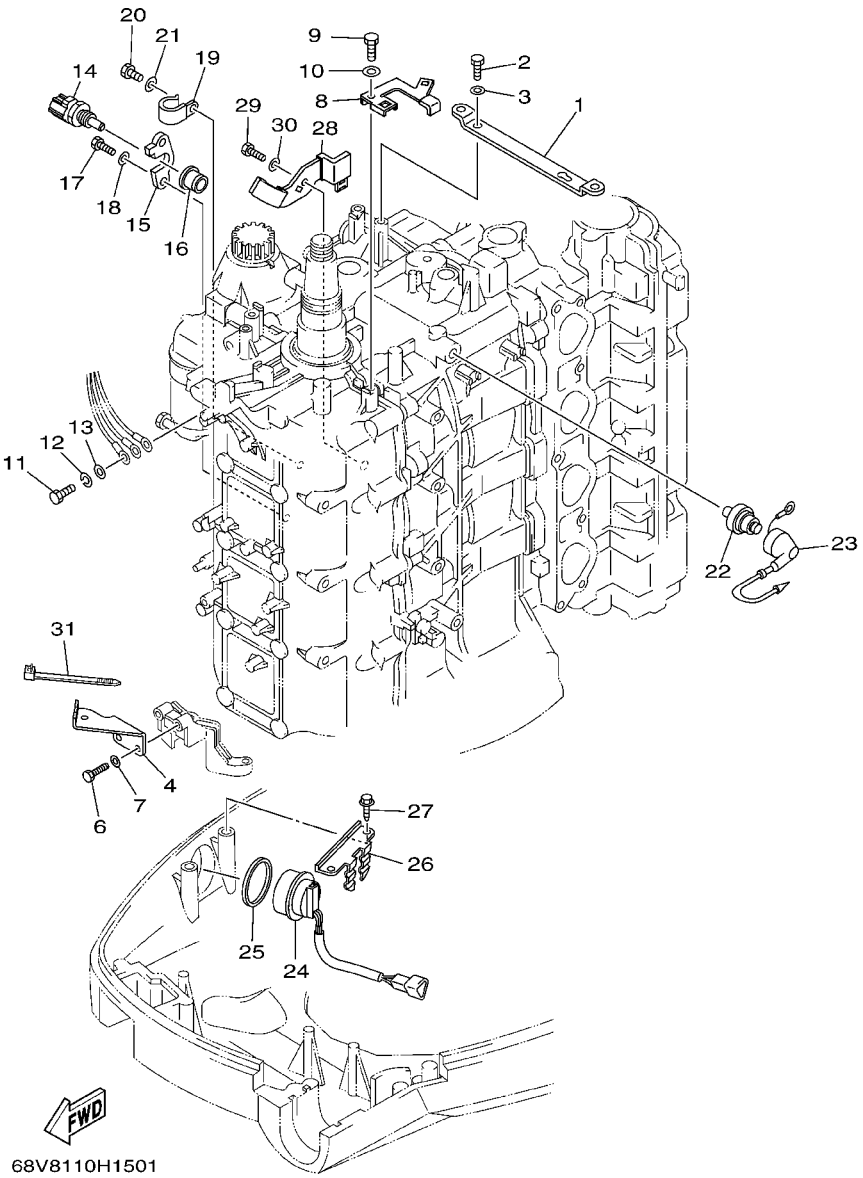

FIG. 15 ELECTRICAL 3

REF. NO.	PART NO.	DESCRIPTION	68V8	68W8				REMARKS
28	6D8–8252H–00	PLATE, HOLDER	1	1				
29	97095–06012	BOLT	1	1				
30	92995–06600	WASHER	1	1				
31	90465–13M18	CLAMP	1	1				Go to P/N:PE0-OM-080064

PARTS NEWS

YAMAHA
YAMAHA MOTOR CO., LTD.
2500 SHINGAI IWATA SHIZUOKA JAPAN

News No. PE0-OM-080064(1/2)

Date:2008/09/26

Signature:K . Otsuka

Cause ☑ Revision Notice ☐ Correction ☐ Sales Unit Change ☐ Others

Model	F115TR, F115AET '09 / LF115TR, FL115AET '09
Subject	PARTS CATALOGUE CORRECTIONS
CATALOGUE NO.	See the"List of Models and CATALOGUE No's below."

Time of YPEC Revision Text, Illustration --> Oct./25/2008 PDF Replace --> Oct./25/2008

(YPEC = Yamaha Parts Electrical Catalogue = Website parts catalogue)

1.LIST CORRECTION

FIG.13 ELECTRICAL 1

Fig.No-Ref.No.	PART NO.		PART NAME	Q'TY	*1	REMARKS
13-14	OLD	6D3-81960-00	RECTIFIER & REGULATOR ASSY	1		*Part number revision
	NEW	**68V-81960-10**			○	

FIG.15 ELECTRICAL 3

15-4	OLD	6D8-81528-00	CLAMP 1	1		*Part number revision
	NEW	**68V-81528-00**			○	
15-5	OLD	~~90480-13M24~~	~~GROMMET~~	~~1~~		*Deleted Parts
15-6	OLD	97095-06014	BOLT	1		*Part number & Q'ty revision
	NEW	**97095-06016**		**2**	○	
15-7	OLD	92995-06600	WASHER	1		*Q'ty revision
	NEW	**92995-06600**		**2**	○	
15-31	**NEW**	**90465-13M18**	**CLAMP**	**1**	○	*Added Parts

*Applicable Engine Serial No.

MODEL NAME	MODEL CODE	Applicable Engine Serial No.
F115TR, F115AET	68V8	68V:1098138-
LF115TR, FL115AET	68W8	68W:1004277-

*1: Interchangeability

A	Old Parts	Old Parts
	New Parts	New Parts
B	Old Parts	Old Parts
	New Parts	New Parts
C	Old Parts	Old Parts
	New Parts	New Parts
○	These parts are interchangeable with a set	

2. ILLUSTRATION CORRECTION

FIG.13 ELECTRICAL 1

(OLD)

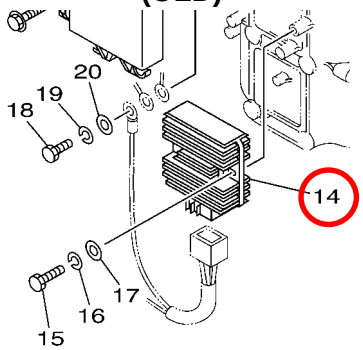

(NEW)

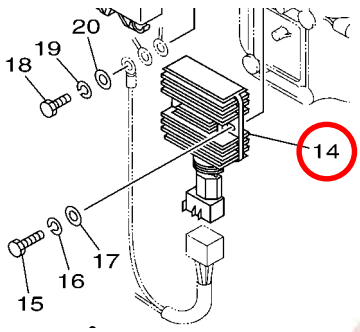

Parts Manager Check	Service Manager Check	Parts Manager File

YAMAHA MOTOR CO.,LTD
2500 Shingai Iwata Shizuoka 438-8501.Japan
Technical Publication Dept.

YAMAHA GENUINE Parts & Accessories

PARTS NEWS

YAMAHA
YAMAHA MOTOR CO., LTD.
2500 SHINGAI IWATA SHIZUOKA JAPAN

News No. PE0-OM-080064(2/2)

Date:2008/09/26

Signature: K . Otsuka

Cause ☑ Revision Notice ☐ Correction ☐ Sales Unit Change ☐ Others

Model	F115TR, F115AET '09 / LF115TR, FL115AET '09
Subject	PARTS CATALOGUE CORRECTIONS
CATALOGUE NO.	See the"List of Models and CATALOGUE No's below."

Time of YPEC Revision Text, Illustration --> Oct./25/2008 PDF Replace --> Oct./25/2008

(YPEC = Yamaha Parts Electrical Catalogue = Website parts catalogue)

2. ILLUSTRATION CORRECTION

FIG.15 ELECTRICAL 3

(OLD)

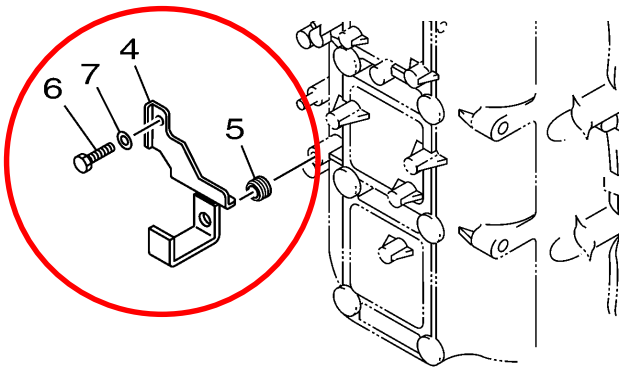

(NEW)

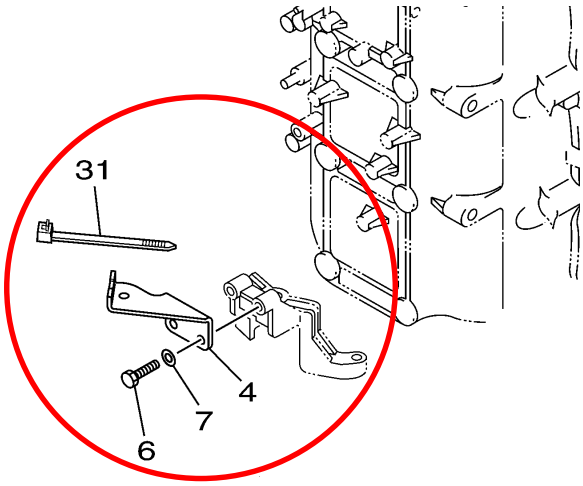

3.LIST of Models and CATALOGUE No's.

The applicable MODELS, MODEL CODES, and CATALOGUE No's are as follows.

MODEL NAME	MODEL CODE	MODEL YEAR	CATALOGUE NO.
F115TR	68V8	2009	1H68V-110E1
LF115TR	68W8	2009	1H68W-110E1
F115TRH, F115AET LF115TRH, FL115AET	68V8 68W8	2009	1H68V-100E1
F115AET FL115AET	68V8 68W8	2009	1H68V-300F1

Thank you very much for your cooperation.

Parts Manager Check	Service Manager Check	Parts Manager File

YAMAHA MOTOR CO.,LTD
2500 Shingai Iwata Shizuoka 438-8501.Japan
Technical Publication Dept.

YAMAHA GENUINE Parts & Accessories

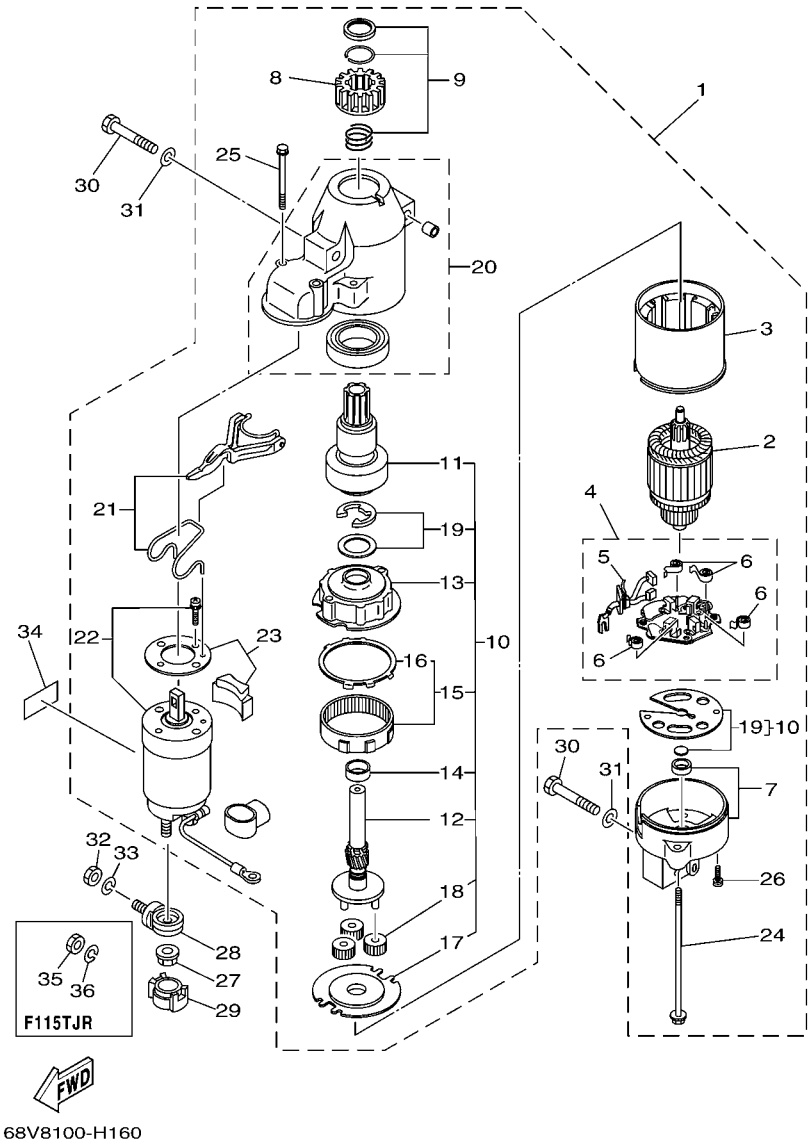

FIG. 16 STARTING MOTOR

REF. NO.	PART NO.	DESCRIPTION	68V8	68W8				REMARKS
1	68V–81800–01	STARTING MOTOR ASSY	1	1				
2	67F–81850–00	.ARMATURE ASSY	1	1				
3	67F–81810–00	.STATOR ASSY	1	1				
4	68F–81840–00	.BRUSH HOLDER ASSY	1	1				
5	67F–81801–00	..BRUSH SET	1	1				
6	67F–81813–00	..SPRING, BRUSH	4	4				
7	68F–81820–00	.REAR BRACKET ASSY	1	1				
8	67F–81808–00	.PINION ASSY	1	1				
9	67F–81857–00	.PINION STOPPER SET	1	1				
10	67F–81807–00	.GEAR ASSY, STARTING MOTOR	1	1				
11	67F–81832–00	..CLUTCH, OVER RUN	1	1				
12	67F–81836–00	..SHAFT, PINION	1	1				
13	67F–81821–00	..BRACKET, CENTER 1	1	1				
14	67F–81841–00	..BEARING	1	1				
15	67F–81891–00	..GEAR, RING	1	1				
16	67F–8183R–00	...GASKET	1	1				
17	67F–81830–00	..BRACKET, CENTER 2	1	1				
18	60V–8183T–00	..GEAR, IDLER	3	3				
19	67F–81809–00	..WASHER KIT	1	1				
20	67F–81842–00	.COVER	1	1				
21	67F–81839–00	.LEVER ASSY	1	1				
22	68V–81941–01	.STARTER RELAY ASSY	1	1				
23	67F–81869–00	.COVER, DUST	1	1				
24	6K7–81826–11	.BOLT	2	2				
25	67F–81828–00	.BOLT 2	2	2				
26	67F–81846–00	.SCREW	2	2				
27	90179–08003	NUT	1	1				

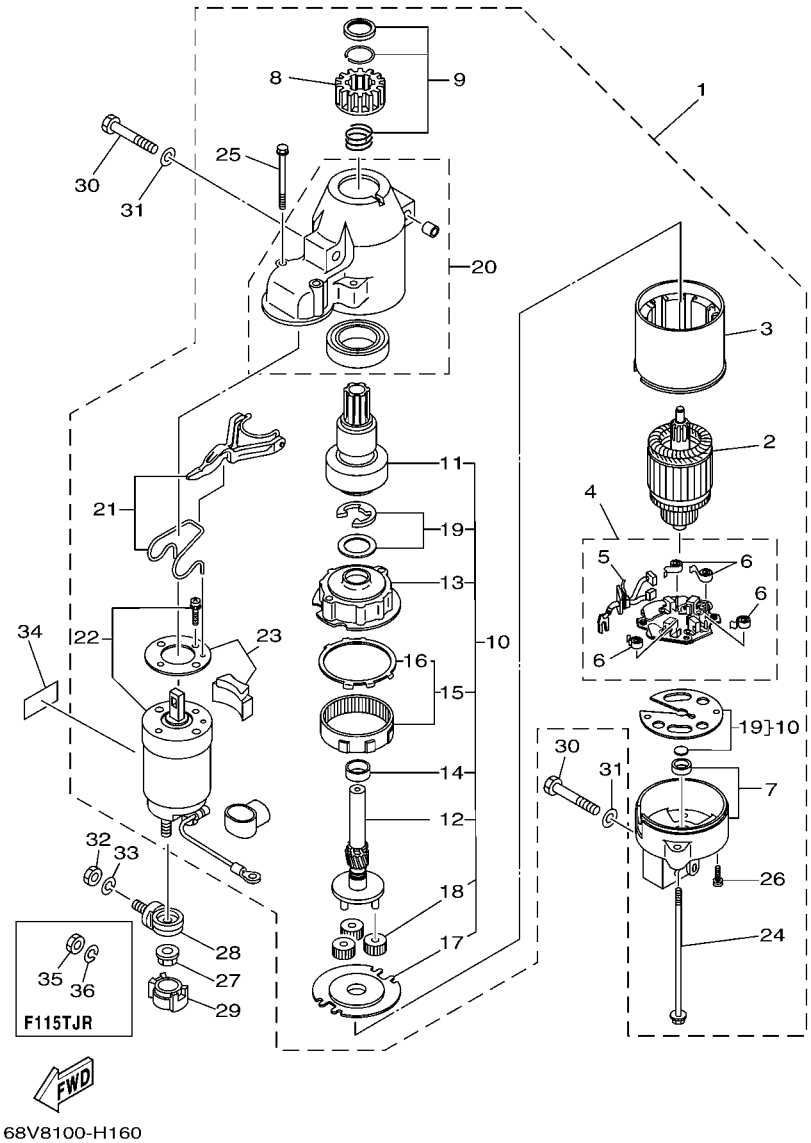

FIG. 16 STARTING MOTOR

REF. NO.	PART NO.	DESCRIPTION	68V8	68W8				REMARKS
28	60V–81925–00	TERMINAL	1	1				
29	68F–82582–00	COVER, WIRE HARNESS	1	1				
30	97013–08045	BOLT	3	3				
31	92903–08600	WASHER, PLATE	3	3				
32	95333–08600	NUT	1	1				EXCEPT F115TJR
33	92903–08100	WASHER, SPRING	1	1				EXCEPT F115TJR
34	67F–83627–01	LABEL, CAUTION 7	1					F115TJR
35	95333–08600	NUT	1					AP F115TJR
36	92903–08100	WASHER, SPRING	1					AP F115TJR

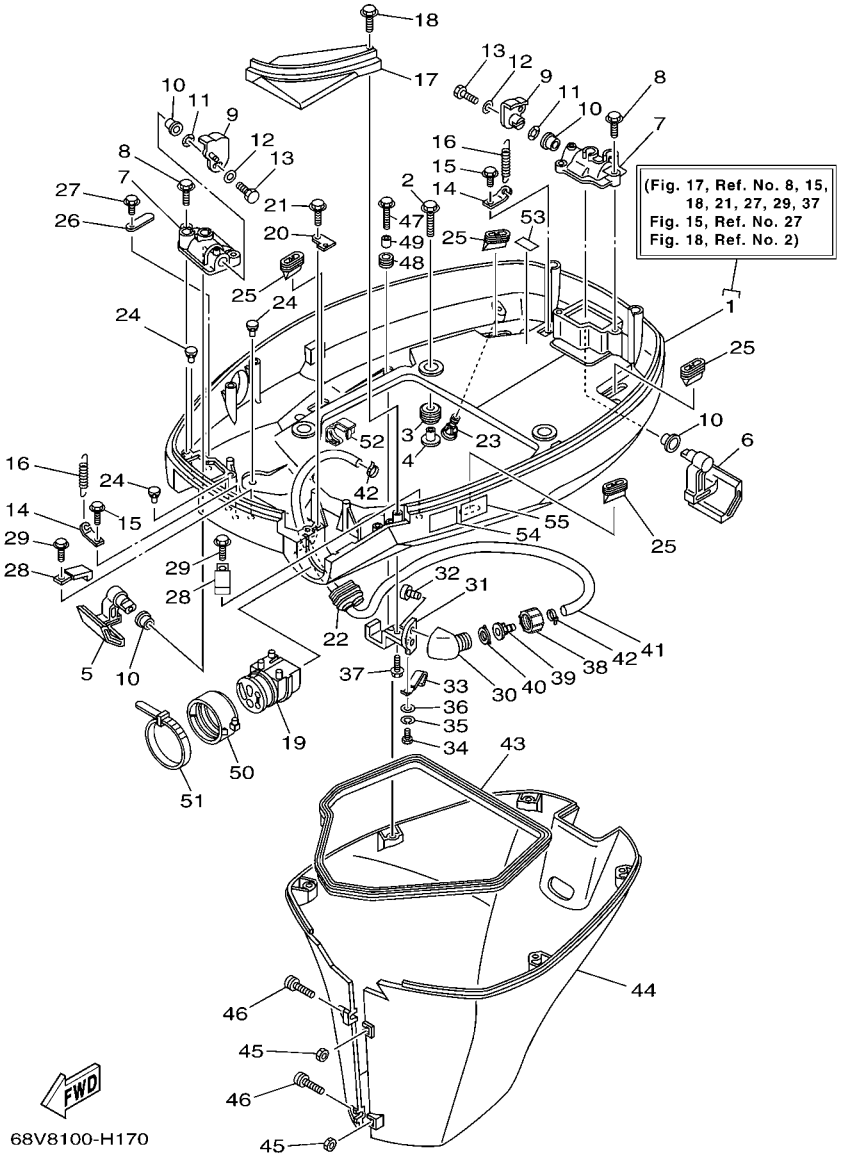

*1: 68V-FOR OCEANIA, BRAZIL, CANADA (F115TJR)
68W-FOR OCEANIA, BRAZIL

FIG. 17 BOTTOM COWLING

REF. NO.	PART NO.	DESCRIPTION	68V8	68W8				REMARKS
1	68V–42710–01–8D	BOTTOM COWLING ASSY	1	1				
2	90119–08M22	BOLT, WITH WASHER	4	4				
3	90480–22M15	GROMMET	4	4				
4	90387–08M37	COLLAR	4	4				
5	67F–42815–00–8D	LEVER, CLAMP	1	1				
6	67F–42816–00–8D	LEVER, CLAMP	1	1				
7	67F–42828–00–5B	PLATE, CLAMP	2	2				
8	90109–06M82	BOLT	4	4				
9	68V–42818–01	LEVER, CLAMP	2	2				
10	90386–15M73	BUSH	4	4				
11	90206–15M18	WASHER, WAVE	2	2				
12	90201–06068	WASHER, PLATE	2	2				
13	97095–06016	BOLT	2	2				
14	64D–43144–00	HOOK, SPRING	2	2				
15	90109–06M80	BOLT	2	2				
16	90506–16M34	SPRING, TENSION	2	2				
17	68V–42738–00–5B	PLATE, FITTING	1	1				
18	90109–06M82	BOLT	2	2				
19	68V–42725–00	GROMMET	1	1				EXCEPT FOR CAR
	68V–42725–10	GROMMET	1	1				FOR CAR
20	67F–42756–00	STAY, CLAMP	1	1				
21	90109–06M86	BOLT	1	1				
22	6H1–42726–21	GROMMET	1	1				FLUSHING KIT
23	6H3–44391–01	NIPPLE, HOSE	1	1				
24	6H4–42748–00	GROMMET	3	3				
25	67F–42717–00	RUBBER, SEAL 2	4	4				
26	6E5–82588–00	PLATE	1	1				

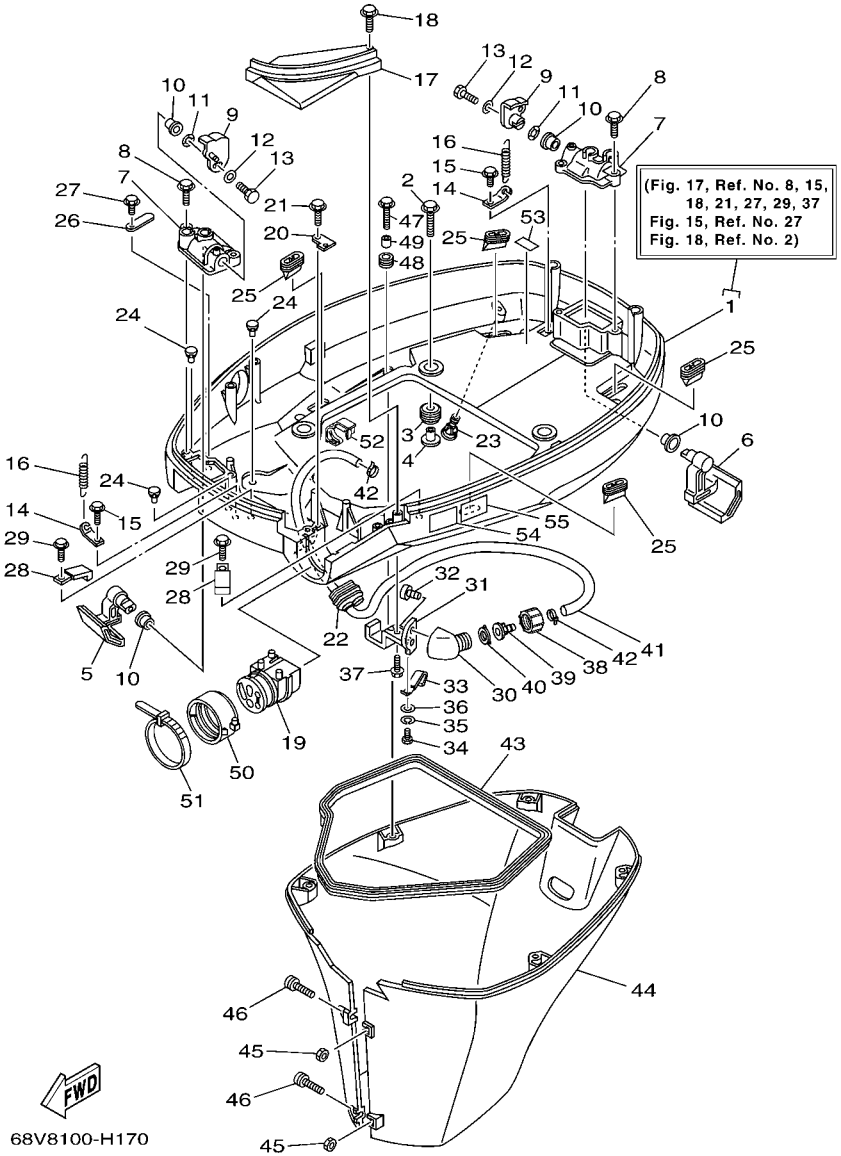

*1: 68V-FOR OCEANIA, BRAZIL, CANADA (F115TJR)
68W-FOR OCEANIA, BRAZIL

FIG. 17 BOTTOM COWLING

REF. NO.	PART NO.	DESCRIPTION	68V8	68W8				REMARKS
27	90109–06M81	BOLT	1	1				
28	90465–08M23	CLAMP	2	2				
29	90109–06M80	BOLT	2	2				
30	68T–12572–00	ADAPTER	1	1				FLUSHING KIT
31	67F–12535–01	PLATE	1	1				FLUSHING KIT
32	90167–06002	SCREW, TAPPING	2	2				FLUSHING KIT
33	90462–06018	CLAMP	1	1				FLUSHING KIT
34	97095–06008	BOLT	1	1				FLUSHING KIT
35	92995–06100	WASHER, SPRING	1	1				FLUSHING KIT
36	92995–06200	WASHER	1	1				FLUSHING KIT
37	90109–06M86	BOLT	1	1				FLUSHING KIT
38	6R3–12581–00	JOINT, HOSE 1	1	1				FLUSHING KIT
39	6R3–12582–00	JOINT, HOSE 2	1	1				FLUSHING KIT
40	6R3–12583–00	GASKET, HOSE JOINT	1	1				FLUSHING KIT
41	68V–24312–00	PIPE 2	1	1				FLUSHING KIT
42	90465–11M10	CLAMP	2	2				FLUSHING KIT
43	61A–42716–00	RUBBER, SEAL 1	1	1				
44	67F–42741–01–8D	APRON	1	1				
45	95380–06600	NUT, HEXAGON	2	2				
46	90159–06M28	SCREW, WITH WASHER	2	2				
47	90109–06M80	BOLT	5	5				
48	90480–13M24	GROMMET	5	5				
49	90387–06M43	COLLAR	5	5				
50	68F–42753–00	FASTNER	1	1				AP *1
51	90464–20258	CLAMP	1	1				AP *1
52	90464–18004	CLAMP	1	1				
53	68V–82377–00	LABEL	1	1				

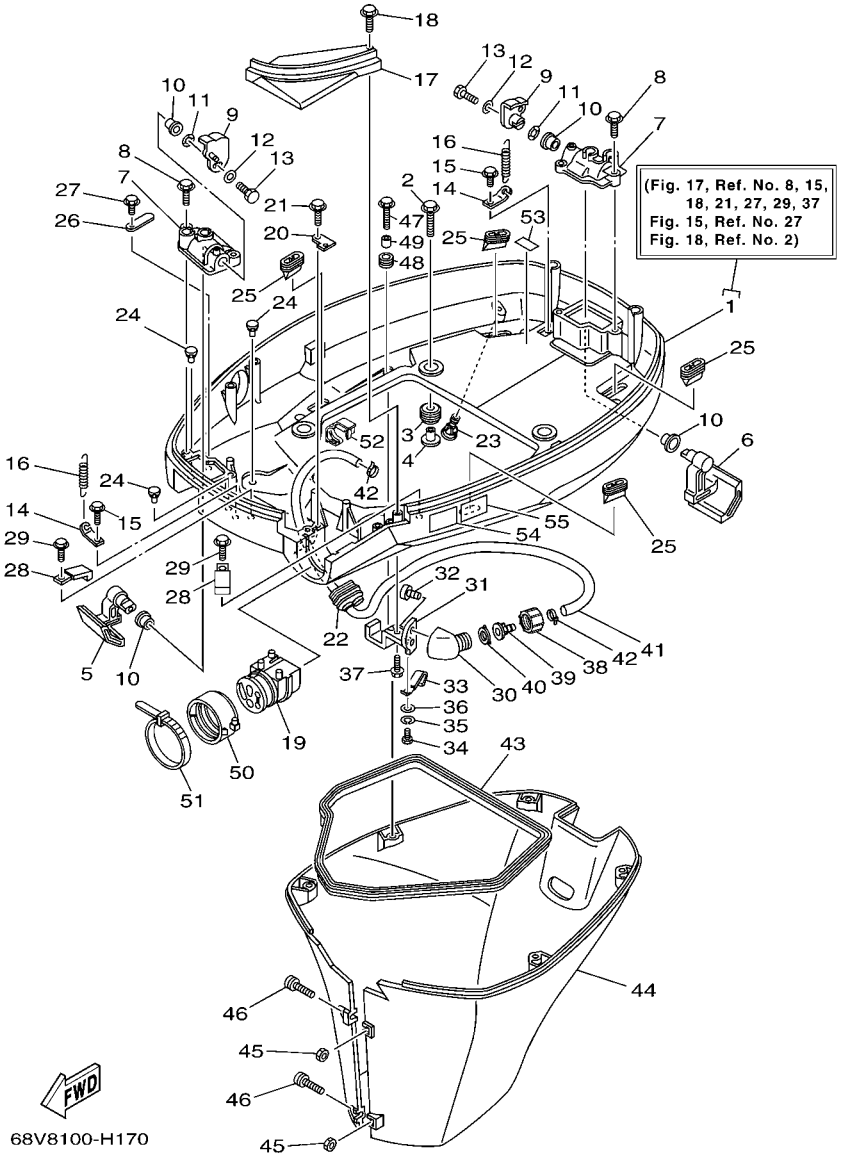

*1: 68V-FOR OCEANIA, BRAZIL, CANADA (F115TJR)
68W-FOR OCEANIA, BRAZIL

FIG. 17 BOTTOM COWLING

REF. NO.	PART NO.	DESCRIPTION	68V8	68W8				REMARKS
54	6AH–42794–40	LABEL, WARNING (GENERAL)	1	1				
55	6AH–42794–50	LABEL, WARNING (GENERAL)	1	1				FOR CAN,CAR,BRA

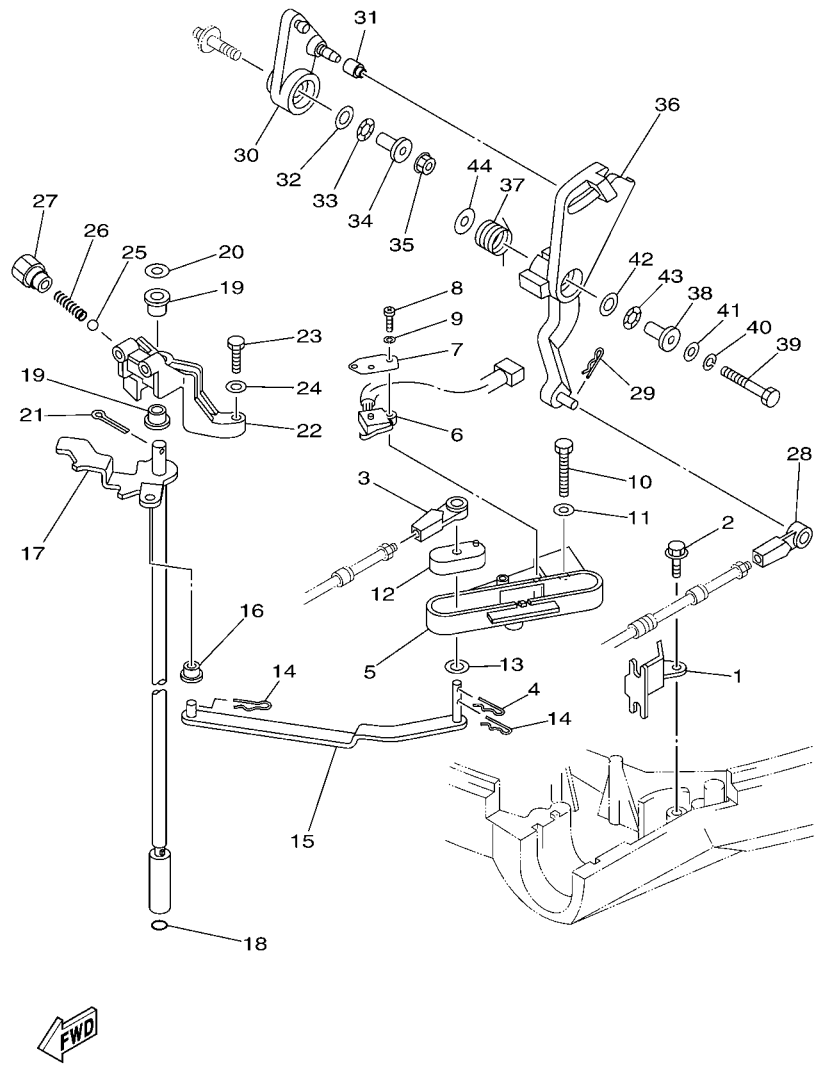

68V3100-C210

FIG. 18 CONTROL

REF. NO.	PART NO.	DESCRIPTION	68V8	68W8				REMARKS
1	67F–48538–00	CLAMP, CABLE 1	1	1				
2	90109–06M86	BOLT	1	1				
3	663–48344–00	CABLE END, REMOTE CONTROL	1	1				
4	90468–18008	CLIP	1	1				
5	68V–44117–01	BRACKET	1	1				
6	60V–8259F–00	SWITCH ASSY	1	1				EXCEPT F115TJR
7	61A–82588–01	PLATE	1	1				EXCEPT F115TJR
8	97885–04016	SCREW, PAN HEAD	2	2				EXCEPT F115TJR
9	92995–04100	WASHER	2	2				EXCEPT F115TJR
10	97095–06040	BOLT	2	2				
11	92995–06600	WASHER	2	2				
12	68V–44122–01	BUSHING, SHIFT ROD LEVER	1	1				
13	90202–07M07	WASHER, PLATE	1	1				
14	90468–18008	CLIP	2	2				
15	68V–44121–00	LEVER, SHIFT ROD	1	1				
16	90386–06M12	BUSH	1	1				
17	68V–44120–10	HANDLE GEAR SHIFT ASSY	1					L(20.3")
	68V–44120–30	HANDLE GEAR SHIFT ASSY	1	1				X(25.3")
18	93210–09165	O-RING	1	1				
19	90386–90M90	BUSH	2	2				
20	90201–09M02	WASHER, PLATE	1	1				
21	91490–20015	PIN. COTTER	1	1				
22	68V–44118–00	BRACKET	1	1				
23	97075–06025	BOLT	2	2				
24	92995–06600	WASHER	2	2				
25	93501–04M02	BALL	1	1				
26	90501–12082	SPRING, COMPRESSION	1	1				

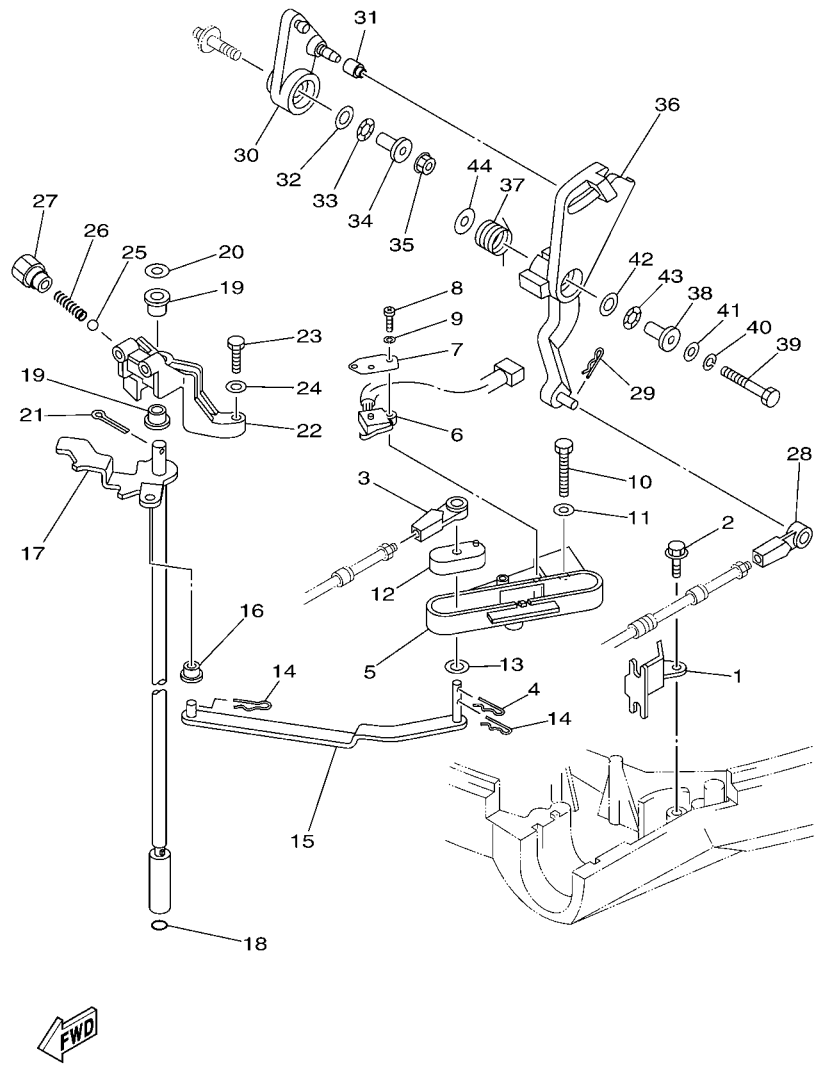

FIG. 18 CONTROL

REF. NO.	PART NO.	DESCRIPTION	68V8	68W8				REMARKS
27	648–42715–00	BUSHING	1	1				
28	663–48344–00	CABLE END, REMOTE CONTROL	1	1				
29	90468–18008	CLIP	1	1				
30	68V–42157–00	LEVER, THROTTLE	1	1				
31	68V–42171–00	BUSHING	1	1				
32	90201–10M02	WASHER, PLATE	1	1				
33	90206–10M04	WASHER, WAVE	1	1				
34	90387–06M21	COLLAR	1	1				
35	90179–06M28	NUT	1	1				
36	68V–42154–00	LEVER, THROTTLE CONTROL	1	1				
37	67F–44135–00	SPRING	1	1				
38	90387–06M21	COLLAR	1	1				
39	97095–06035	BOLT	1	1				
40	92995–06100	WASHER, SPRING	1	1				
41	92995–06600	WASHER	1	1				
42	90201–10M02	WASHER, PLATE	1	1				
43	90206–10M04	WASHER, WAVE	1	1				
44	90201–06M31	WASHER, PLATE	1	1				

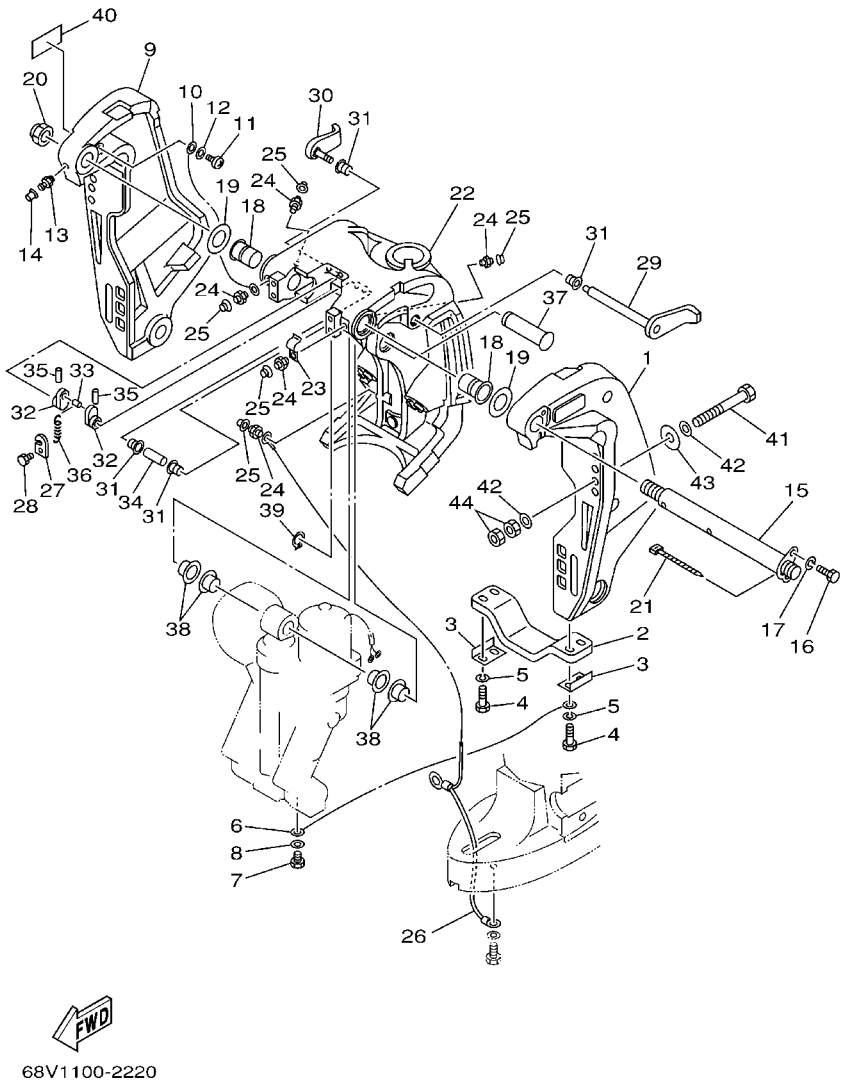

FIG. 19 BRACKET 1

REF. NO.	PART NO.	DESCRIPTION	68V8	68W8				REMARKS
1	68V–43111–01–8D	BRACKET, CLAMP 1	1	1				
2	6G5–45251–02	ANODE	1	1				
3	6G5–44526–00	PLATE	2	2				
4	97095–06030	BOLT	4	4				
5	92995–06100	WASHER, SPRING	4	4				
6	6E5–82148–00	WIRE, LEAD 4	1	1				
7	97095–06010	BOLT	1	1				
8	92995–06600	WASHER	1	1				
9	68V–43112–01–8D	BRACKET, CLAMP 2	1	1				
10	6E5–82148–00	WIRE, LEAD 4	1	1				
11	97885–06012	SCREW, PAN HEAD	1	1				
12	92995–06600	WASHER	1	1				
13	93700–06M03	NIPPLE, GREASE	1	1				
14	663–45119–00	CAP, GREASE NIPPLE	1	1				AP
15	64E–43131–01	BOLT, CLAMP BRACKET	1	1				
16	97095–08020	BOLT	1	1				
17	92995–08100	WASHER	1	1				
18	90386–25M31	BUSH	2	2				
19	90201–26M59	WASHER, PLATE	2	2				
20	90185–22M11	NUT, SELF-LOCKING	1	1				
21	90465–11M10	CLAMP	1	1				
22	64E–43311–10–8D	BRACKET, SWIVEL 1	1					L(20.3")
	64E–43311–20–8D	BRACKET, SWIVEL 1	1	1				X(25.3")
23	90465–08M63	CLAMP	1	1				
24	93700–06M03	NIPPLE, GREASE	5	5				
25	663–45119–00	CAP, GREASE NIPPLE	5	5				AP
26	66K–82149–00	WIRE, LEAD 3	1					L(20.3")

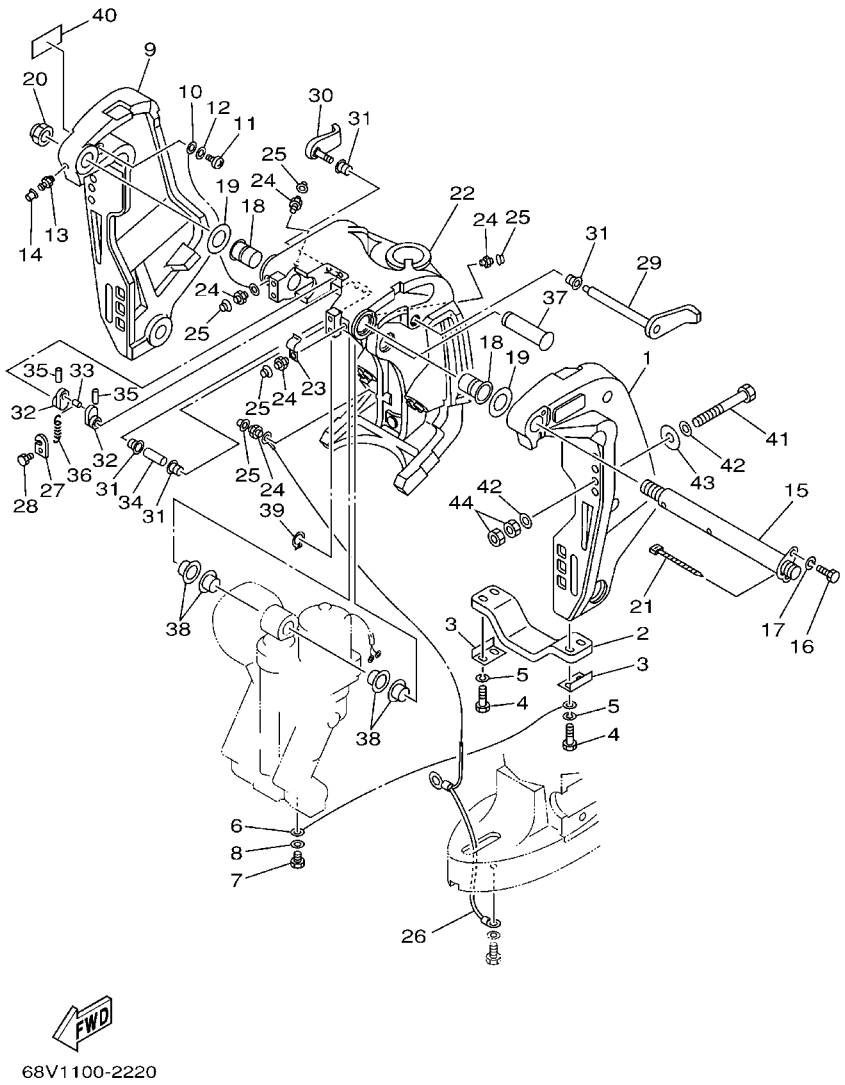

FIG. 19 BRACKET 1

REF. NO.	PART NO.	DESCRIPTION	68V8	68W8				REMARKS
26	68V–82149–30	WIRE, LEAD 3	1	1				X(25.3")
27	66T–43144–00	HOOK, SPRING	1	1				
28	97095–06010	BOLT	1	1				
29	6G5–43181–02	LEVER, TILT STOP	1	1				
30	6G5–43185–02	LEVER, TILT STOP	1	1				
31	90386–10M16	BUSH	4	4				
32	6G5–43148–00	COLLAR, DISTANCE	2	2				
33	90249–06M19	PIN	1	1				
34	90387–10M05	COLLAR	1	1				
35	91690–30020	PIN, SPRING	2	2				
36	90506–14M24	SPRING, TENSION	1	1				
37	64E–43126–00	PIN, UPPER SHOCK MOUNT	1	1				
38	90386–22M98	BUSH	4	4				
39	93410–22M11	CIRCLIP	1	1				
40	63V–82377–50	LABEL (SPARK,IGNITION)	1	1				FOR CAN
41	90101–12M05	BOLT (L:130MM)	4	4				EXCEPT CAR
	90101–12M77	BOLT (L:150MM)	2	2				EXCEPT OCE,CAR
	90101–12M03	BOLT (L:115MM)	4	4				FOR CAR
42	90201–13M01	WASHER, PLATE	8	8				
43	90201–12M05	WASHER, PLATE	4	4				
44	95380–12600	NUT	8	8				

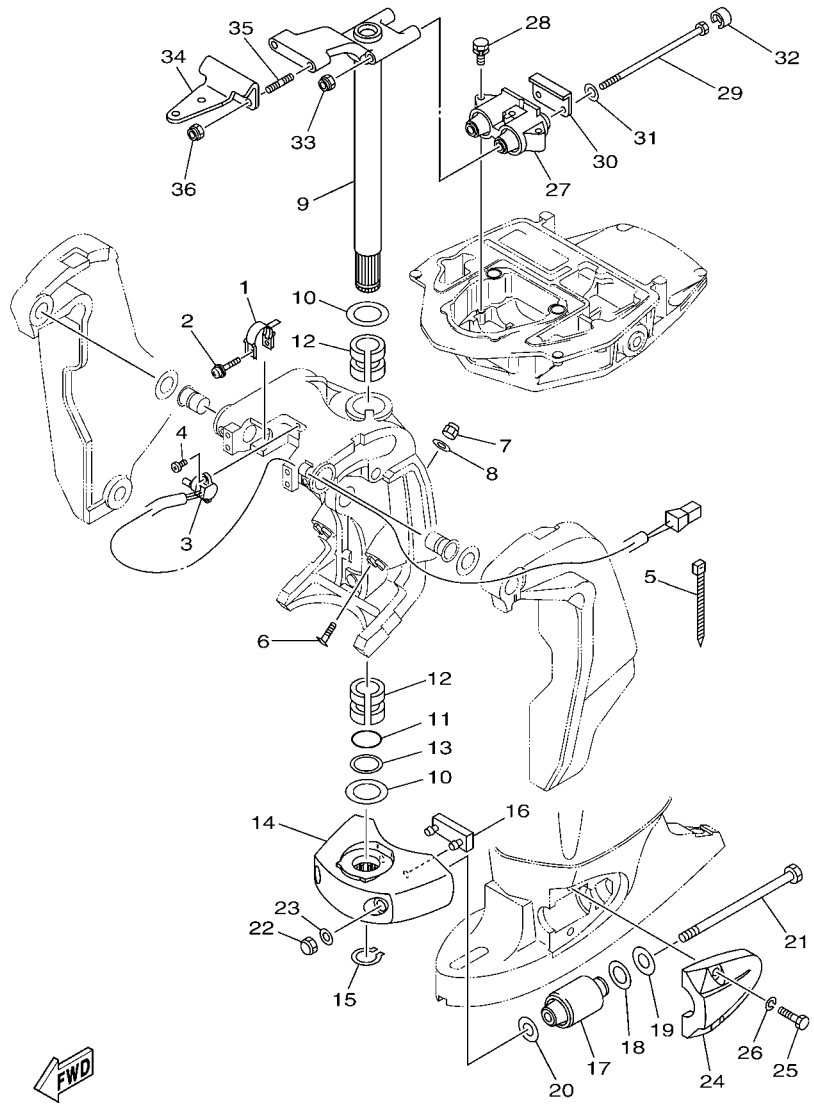

68V7100-G200

FIG. 20 BRACKET 2

REF. NO.	PART NO.	DESCRIPTION	68V8	68W8				REMARKS
1	64E–43139–10	CAM, TRIM SENDER	1	1				
2	90159–05059	SCREW, WITH WASHER	1	1				
3	67H–83672–00	TRIM SENDER	1	1				
4	97885–06016	SCREW, PAN HEAD	2	2				
5	90465–11M10	CLAMP	3	3				
6	63P–43376–00	BOLT, THRUST RECEIVER	2	2				
7	95780–10300	NUT, FLANGE	2	2				
8	92995–10600	WASHER	2	2				
9	68V–42510–10–8D	STEERING BRACKET ASSY	1					L(20.3")
	68V–42510–30–8D	STEERING BRACKET ASSY	1	1				X(25.3")
10	90201–38M60	WASHER, PLATE	2	2				
11	93210–37MH7	O-RING	1	1				
12	90386–38M32	BUSH	2	2				
13	90202–40M47	WASHER, PLATE	1	1				
14	68V–44551–00–8D	HOUSING, LOWER MOUNT RUBBER	1	1				
15	93410–37M04	CIRCLIP	1	1				
16	61A–44575–00	DAMPER, LOWER MOUNT RUBBER	1	1				
17	61A–44555–01–94	MOUNT DAMPER, LOWER SIDE	2	2				
18	90202–32M19	WASHER, PLATE	2	2				
19	90201–16M55	WASHER, PLATE	2	2				
20	90201–15M58	WASHER, PLATE	2	2				
21	90109–14007	BOLT	2	2				
22	95380–14600	NUT	2	2				
23	92995–14600	WASHER	2	2				
24	68V–44553–00–8D	COVER, LOWER MOUNT	2	2				
25	97075–10040	BOLT	4	4				
26	92995–10100	WASHER	4	4				

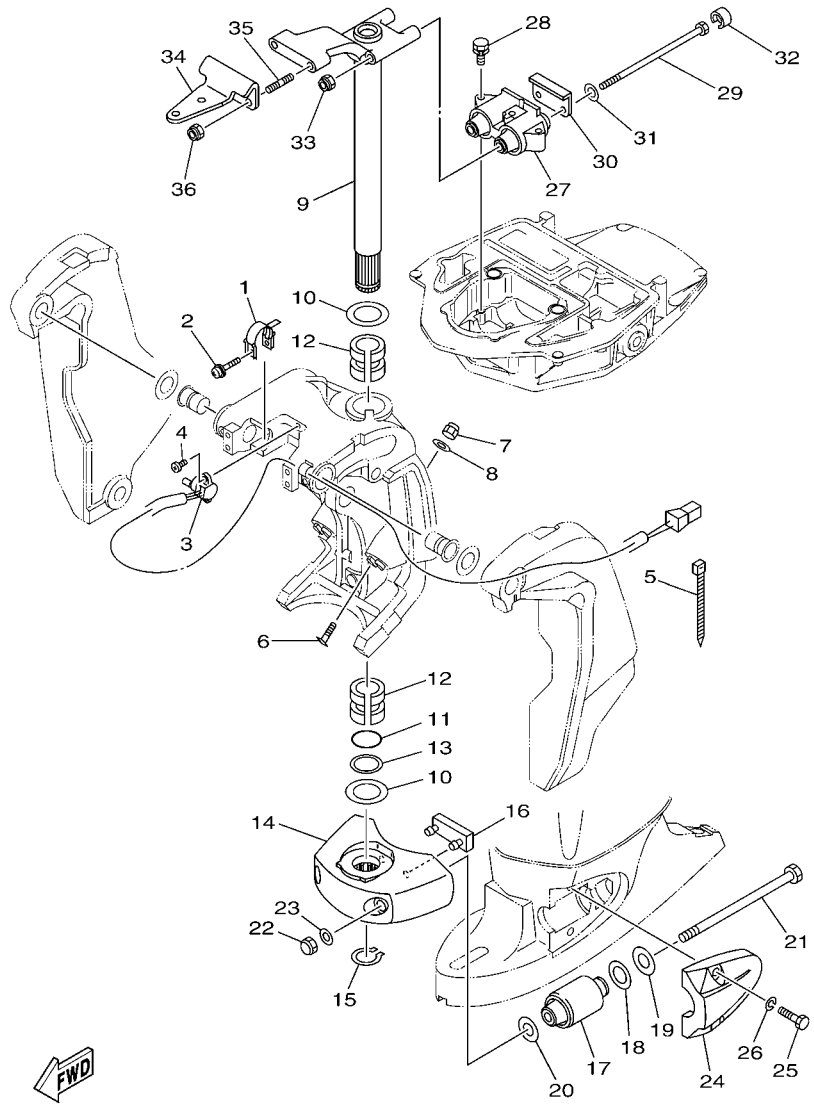

68V7100-G200

FIG. 20 BRACKET 2

REF. NO.	PART NO.	DESCRIPTION	68V8	68W8				REMARKS
27	67F–44514–00–94	MOUNT DAMPER, UPPER SIDE	1	1				
28	90119–08091	BOLT, WITH WASHER	3	3				
29	90109–12007	BOLT	2	2				
30	67F–44526–00	PLATE	1	1				
31	90201–12M09	WASHER, PLATE	2	2				
32	67F–44533–00	DAMPER, UPPER MOUNT RUBBER	2	2				
33	90185–12M12	NUT, SELF-LOCKING	2	2				
34	68V–48511–00–8D	HOOK, STEERING	1	1				
35	90116–10175	BOLT, STUD	2	2				
36	90185–10051	NUT, SELF-LOCKING	2	2				

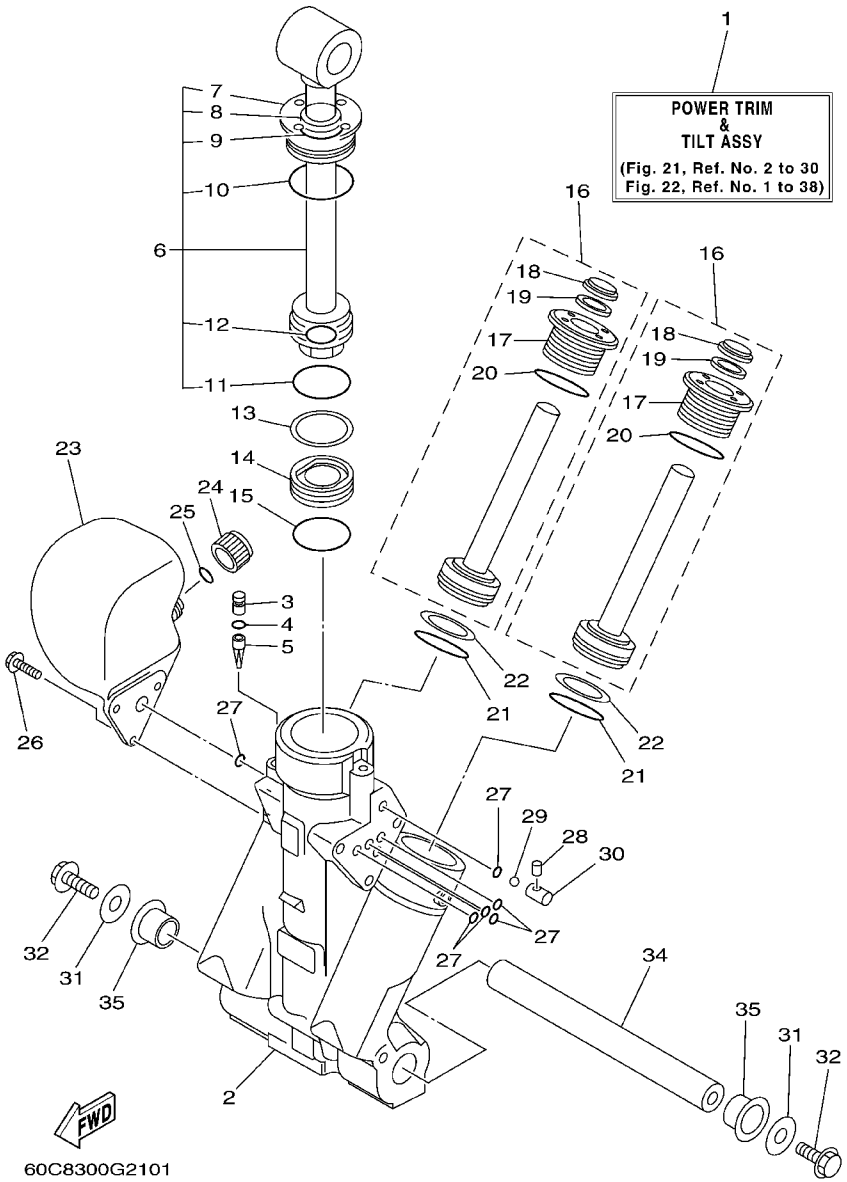

FIG. 21 POWER TRIM & TILT ASSY 1

REF. NO.	PART NO.	DESCRIPTION	68V8	68W8				REMARKS
1	68V–43800–03–4D	POWER TRIM & TILT ASSY	1	1				
2	64E–43825–02	HOUSING, TRIM & TILT	1	1				
3	64E–4388J–00	PLUG 2	1	1				
4	93210–10M74	O-RING	1	1				
5	64E–43817–00	FILTER 2	1	1				
6	64E–43810–01	TILT PISTON SUB ASSY	1	1				
7	64E–43811–01	.SCREW, CYLINDER END	1	1				
8	64E–43898–00	.SEAL ,DUST 2	1	1				
9	64E–43867–00	.O-RING	1	1				
10	64E–43866–00	.O-RING	1	1				
11	6E5–43862–00	.O-RING	1	1				
12	64E–43883–00	.O-RING	1	1				
13	6E5–43872–00	RING, BACK UP	1	1				
14	6E5–43814–02	PISTON, FREE	1	1				
15	6E5–43862–00	O-RING	1	1				
16	64E–43820–01	TRIM PISTON SUB ASSY	2	2				
17	64E–43821–01	.SCREW, TRIM CYLINDER END	1	1				
18	64E–43822–00	.SEAL, TRIM DUST	1	1				
19	64E–4384J–00	.SEAL, TRIM DOWN	1	1				
20	6G5–43864–00	.O-RING	1	1				
21	6E5–43864–00	O-RING	2	2				
22	6E5–43874–01	RING, BACK UP	2	2				
23	64E–43828–00	BODY, RESERVOIR	1	1				
24	64E–43829–00	PLUG, RESERVOIR	1	1				
25	64E–43897–00	O-RING	1	1				
26	64E–4388E–00	BOLT ,SCREW (L:14MM)	3	3				
27	64E–43869–00	O-RING	6	6				

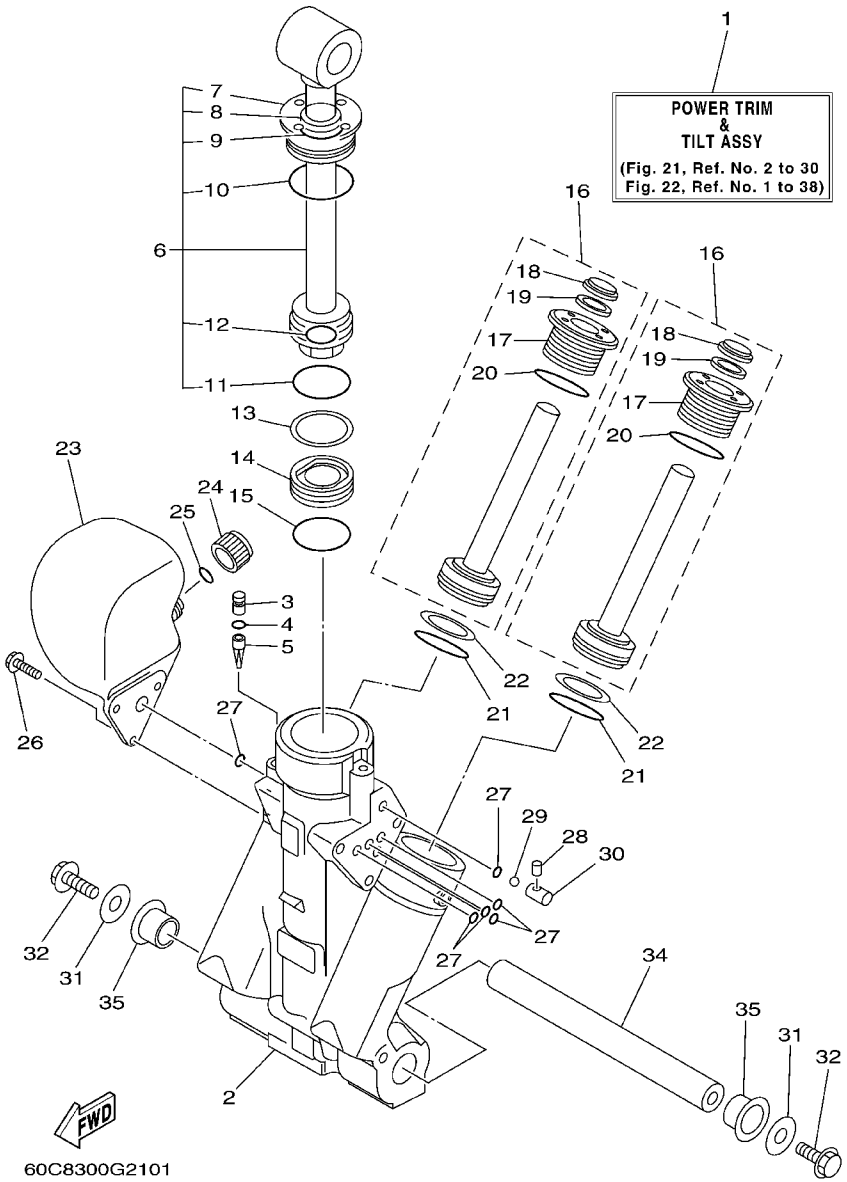

FIG. 21 POWER TRIM & TILT ASSY 1

REF. NO.	PART NO.	DESCRIPTION	68V8	68W8				REMARKS
28	64E–4381G–00	PIN	1	1				
29	6E5–43858–00	BALL	1	1				
30	64E–4382G–00	VALVE, SEAT	1	1				
31	90201–10060	WASHER, PLATE	2	2				
32	97575–10530	BOLT, WITH WASHER	2	2				
34	6BC–43818–00	PIN, LOWER SHOCK MOUNT	1	1				
35	90386–22M98	BUSH	2	2				

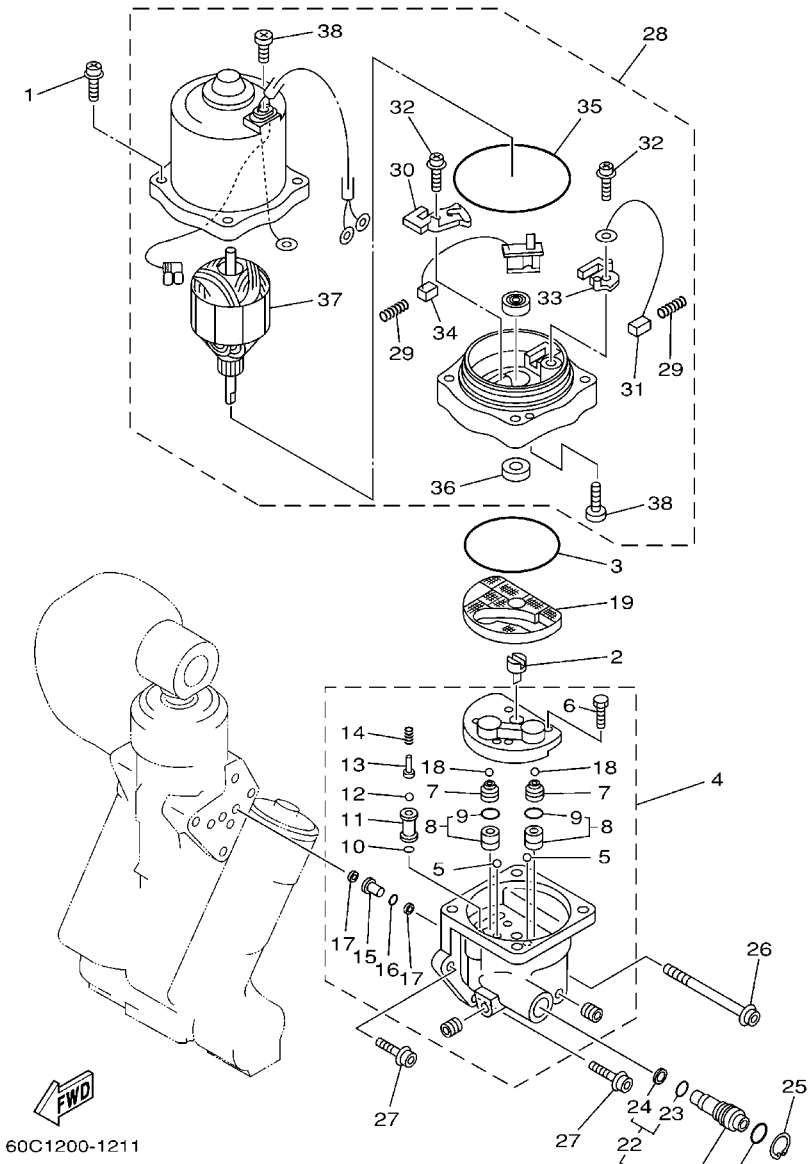

FIG. 22 POWER TRIM & TILT ASSY 2

REF. NO.	PART NO.	DESCRIPTION	68V8	68W8				REMARKS
1	64E–4388E–10	BOLT ,SCREW (L:34.7MM)	4	4				
2	64E–43831–00	CONNECTOR, SHAFT	1	1				
3	64E–43868–00	O-RING	1	1				
4	68V–43830–00	GEAR PUMP ASSY	1	1				
5	72X–43858–00	.BALL	2	2				
6	64E–43843–00	.SCREW, VALVE LOCK	4	4				
7	64E–43841–00	.PISTON, SHUTTLE	2	2				
8	64E–43802–00	.VALVE SUB ASSY	2	2				
9	6E5–43896–00	..O-RING	1	1				
10	6G5–43863–00	.O-RING	1	1				
11	66Y–43851–00	.SEAT, RELIEF VALVE	1	1				
12	64E–43858–00	.BALL	1	1				
13	64E–43859–00	.PIN, VALVE SUPPORT	1	1				
14	68V–43855–00	.SPRING, UP RELIEF	1	1				
15	64E–43850–00	.VALVE SUB ASSY	1	1				
16	64E–43865–00	.O-RING	1	1				
17	64E–43816–00	.FILTER 1	2	2				
18	64E–43858–00	.BALL	2	2				
19	64E–43817–10	FILTER 2	1	1				
20	64E–43860–00	MANUAL VALVE SUB-ASSY	1	1				
21	72X–85075–L0	.O-RING	1	1				
22	64E–43827–00	.RING SET	1	1				
23	64E–4387A–00	..O-RING	1	1				
24	64E–43873–00	..RING, BACK UP	1	1				
25	64E–43875–00	RING, SNAP	1	1				
26	64E–43879–10	SCREW, WITH WASHER	1	1				
27	64E–43879–00	SCREW, WITH WASHER	2	2				

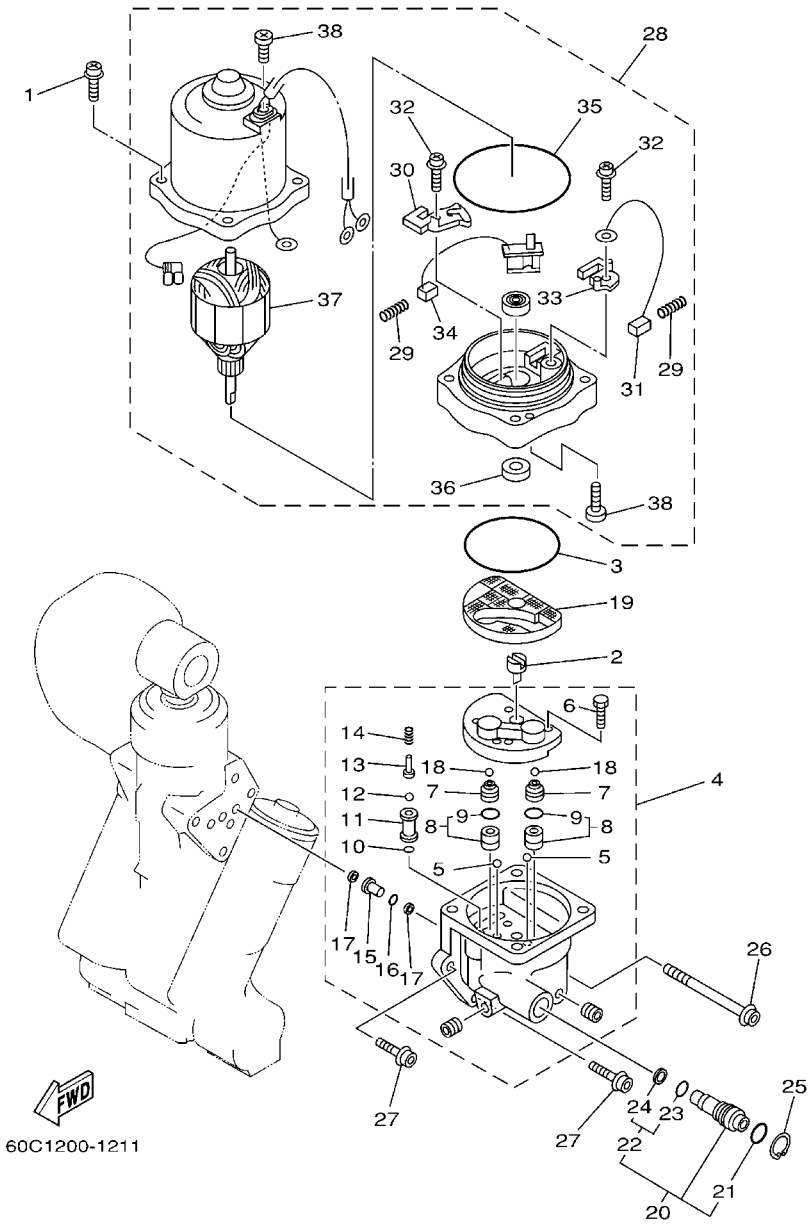

FIG. 22 POWER TRIM & TILT ASSY 2

REF. NO.	PART NO.	DESCRIPTION	68V8	68W8				REMARKS
28	68V–43880–02	MOTOR ASSY	1	1				
29	6H1–4386K–10	.SPRING, BRUSH	2	2				
30	64E–4380J–00	.HOLDER, BRUSH	1	1				
31	64E–43891–00	.BRUSH 1	1	1				
32	97607–04310	.SCREW,WITH WASHER	2	2				
33	64E–4380F–00	.HOLDER, BRUSH 2	1	1				
34	64E–43892–00	.BRUSH 2	1	1				
35	6G5–43865–00	.O-RING	1	1				
36	93102–08M43	.OIL SEAL	1	1				
37	64E–43805–00	.ARMATURE ASSY	1	1				
38	64E–43843–10	.SCREW, VALVE LOCK	1	1				

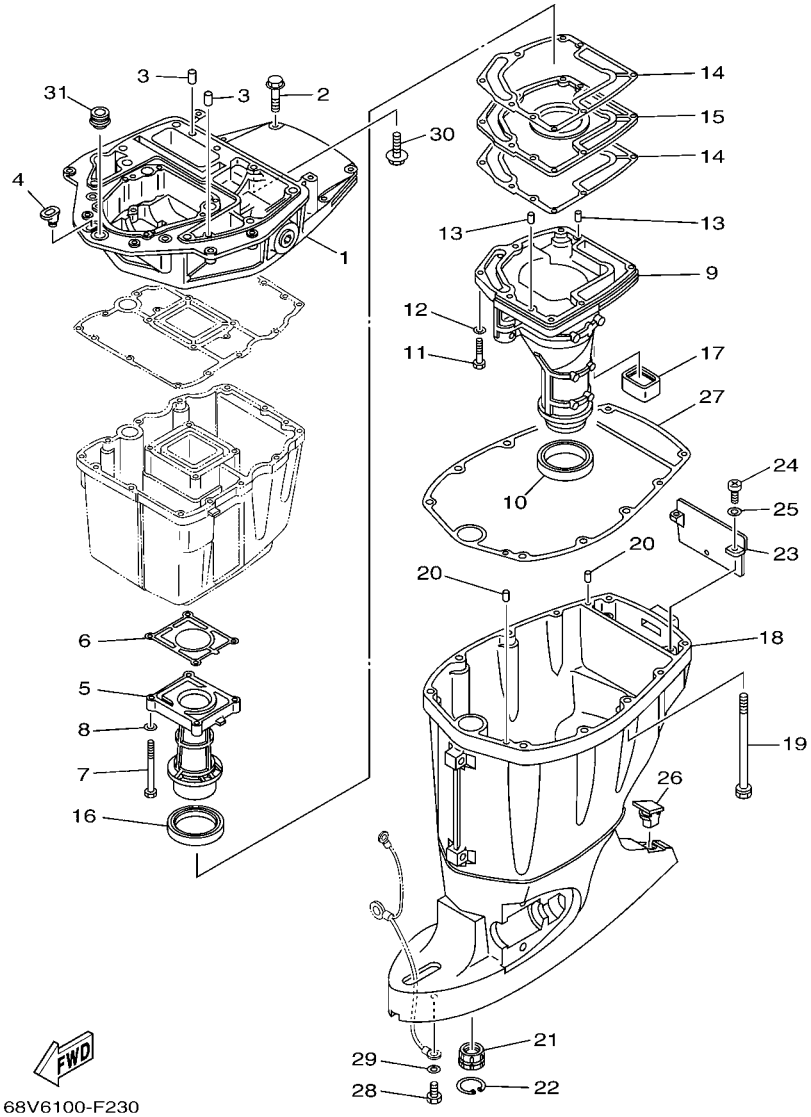

FIG. 23 UPPER CASING

REF. NO.	PART NO.	DESCRIPTION	68V8	68W8				REMARKS
1	67F–41137–02–94	GUIDE, EXHAUST	1	1				
2	97575–08540	BOLT, WITH WASHER	4	4				
3	93608–16M16	PIN, DOWEL	2	2				
4	6G1–42727–00	GROMMET	1	1				
5	67F–41131–01–5B	MANIFOLD, EXT. 1	1	1				
6	67F–41133–A1	GASKET, EXHAUST MANIFOLD 1	1	1				
7	97075–06070	BOLT	4	4				
8	92995–06600	WASHER	4	4				
9	68V–14711–10–5B	MUFFLER 1	1					L(20.3")
	68V–14711–30–5B	MUFFLER 1	1	1				X(25.3")
10	68V–45123–00	GASKET, MUFFLER	1	1				
11	97075–06030	BOLT	7	7				
12	92995–06600	WASHER	7	7				
13	93606–19M23	PIN, DOWEL	2	2				
14	67F–41134–A0	GASKET, EXHAUST MANIFOLD	2	2				
15	67F–45181–00–5B	PLATE	1	1				
16	67F–41138–00	SEAL, EXT. 1	1	1				
17	67F–45127–00	SEAL	1	1				
18	68V–45111–11–8D	CASING, UPPER	1					L(20.3")
	68V–45111–31–8D	CASING, UPPER	1	1				X(25.3")
19	90119–10M08	BOLT, WITH WASHER	6	6				
20	93608–16M16	PIN, DOWEL	2	2				
21	6E5–45318–00	BUSHING, DRIVE SHAFT	1	1				
22	93420–36M01	CIRCLIP	1	1				
23	67F–45151–00	COVER, UPPER CASING	1	1				
24	97880–06016	SCREW, PAN HEAD	2	2				
25	92990–06600	WASHER, PLATE	2	2				

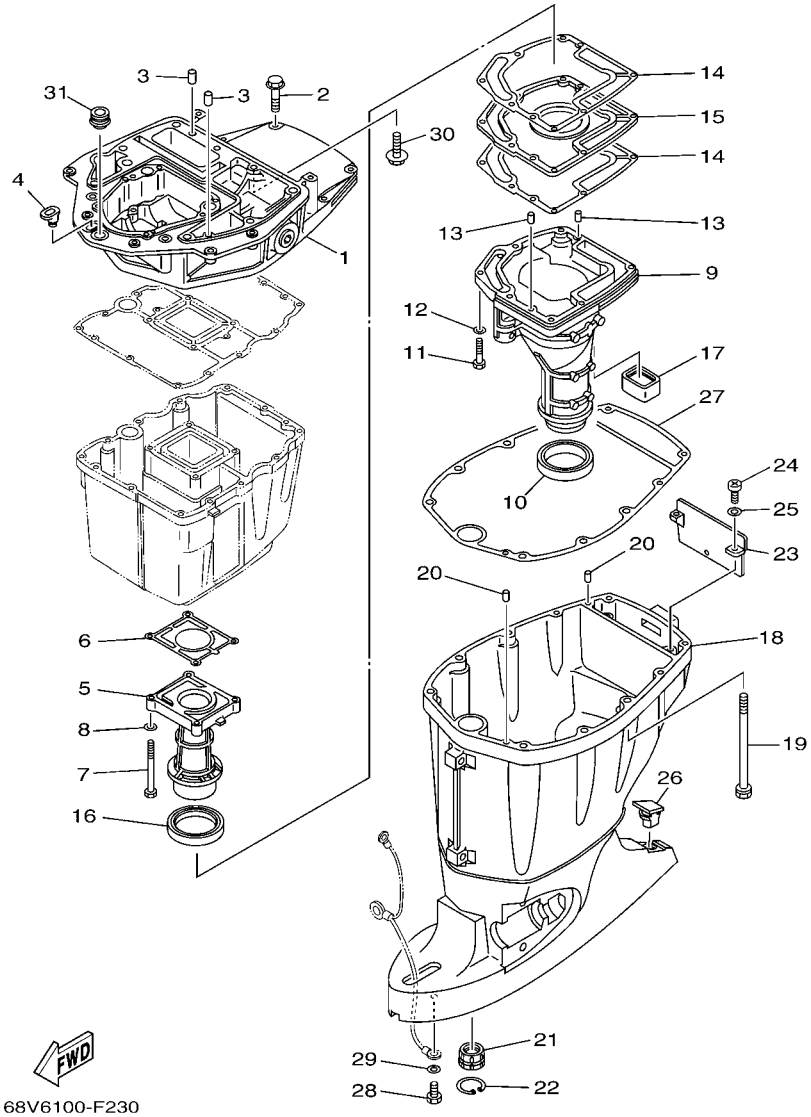

FIG. 23 UPPER CASING

REF. NO.	PART NO.	DESCRIPTION	68V8	68W8				REMARKS
26	6C5–45155–00	CAP	1	1				
27	67F–45113–00	GASKET, UPPER CASING	1	1				
28	97095–06010	BOLT	1	1				
29	92995–06600	WASHER	1	1				
30	90119–08M58	BOLT, WITH WASHER	2	2				
31	67F–42724–00	GROMMET	1	1				

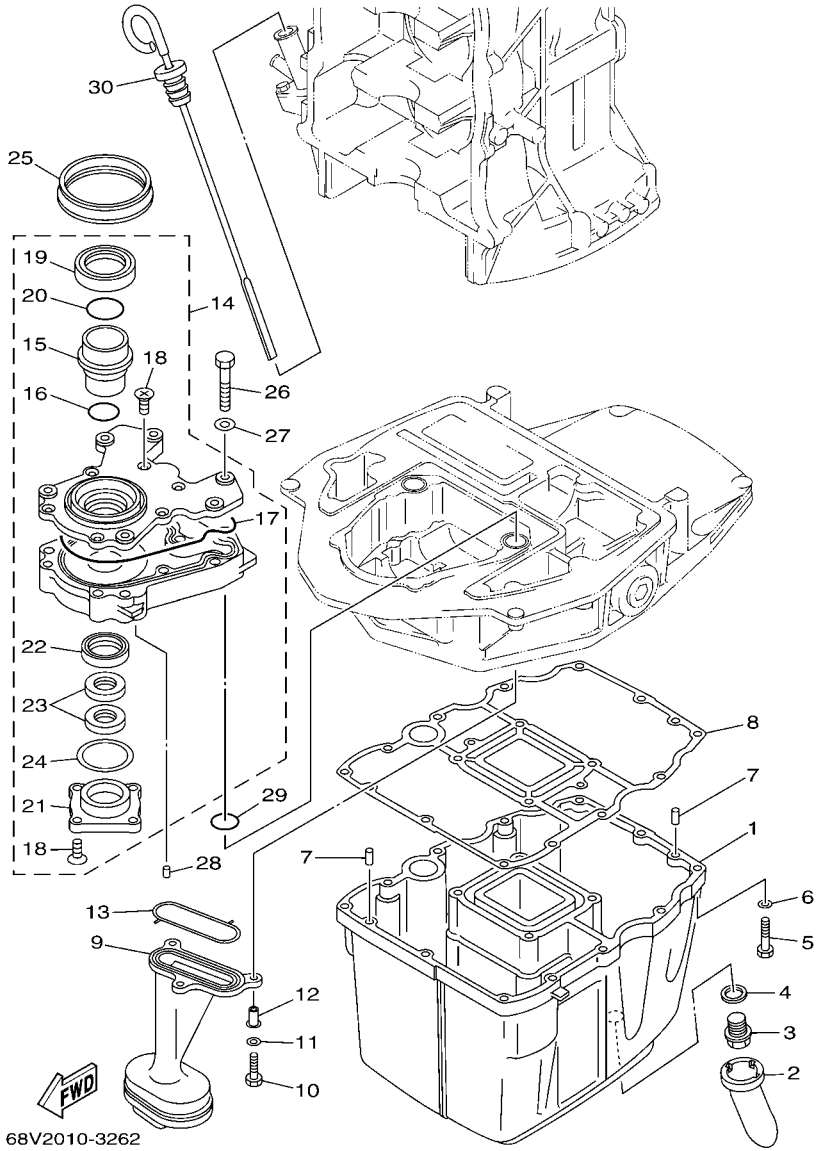

FIG. 24 OIL PAN

REF. NO.	PART NO.	DESCRIPTION	68V8	68W8				REMARKS
1	68V–15311–00–5B	OIL PAN	1	1				
2	63P–15316–00	DAMPER 1	1	1				
3	90340–14M06	PLUG, STRAIGHT SCREW	1	1				
4	90430–14M09	GASKET	1	1				
5	97075–06025	BOLT	12	12				
6	92995–06600	WASHER	12	12				
7	93606–12019	PIN, DOWEL	2	2				
8	68V–15312–00	GASKET, OIL PAN	1	1				
9	67F–13411–00	STRAINER, OIL	1	1				
10	97027–06025	BOLT, HEXAGON	3	3				
11	92907–06600	WASHER, PLATE	3	3				
12	90387–06M64	COLLAR	3	3				
13	67F–13415–00	SEAL, OIL STRAINER	1	1				
14	67F–13300–10	OIL PUMP ASSY	1	1				
15	67F–13314–02	.SHAFT, PUMP	1	1				
16	67F–13473–01	.O-RING	1	1				
17	67F–13329–00	.GASKET, PUMP COVER	1	1				
18	67F–13495–00	.SCREW	10	10				
19	67F–13119–01	.OIL SEAL	1	1				
20	67F–13769–00	.O-RING	1	1				
21	67F–13914–00	.HOUSING, PUMP	1	1				
22	67F–13631–03	.OIL SEAL	1	1				
23	67F–13149–00	.OIL SEAL	2	2				
24	67F–13339–00	.GASKET, PUMP COVER	1	1				
25	67F–13338–00	SEAL	1	1				
26	97095–06045	BOLT	6	6				
27	92995–06600	WASHER	6	6				

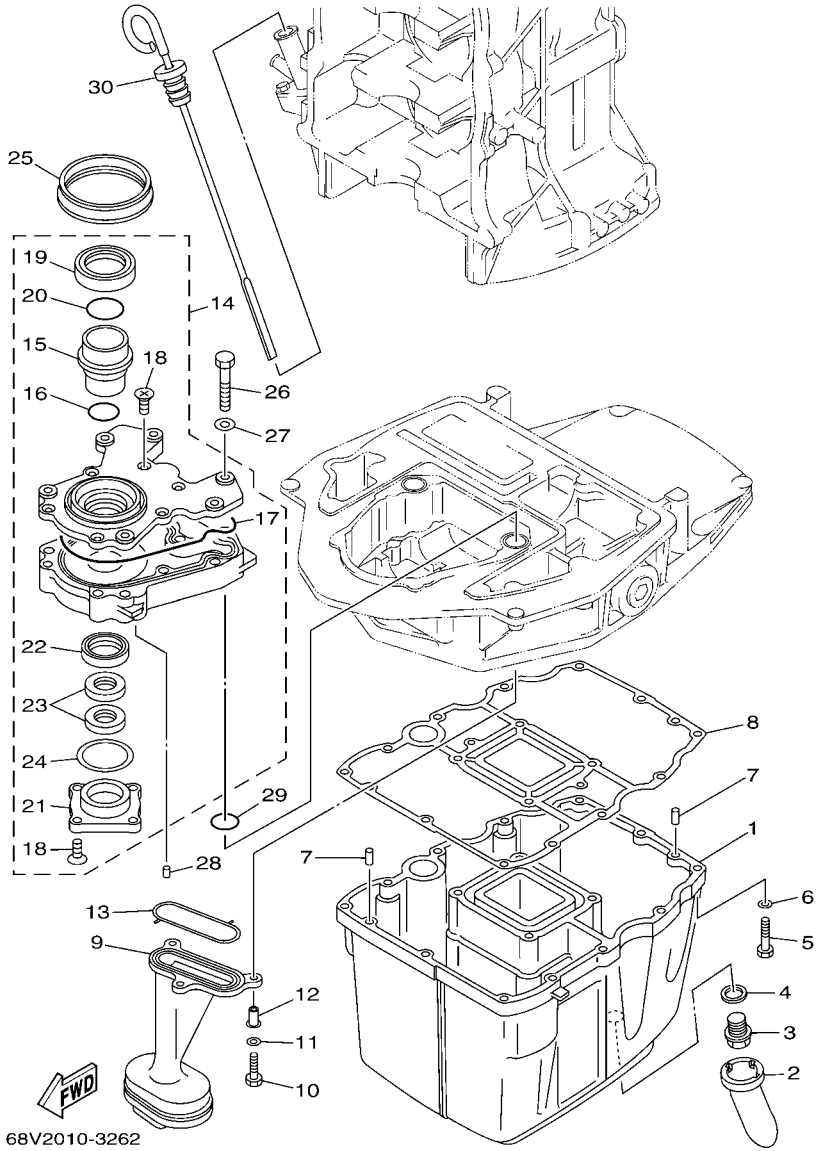

FIG. 24 OIL PAN

REF. NO.	PART NO.	DESCRIPTION	68V8	68W8				REMARKS
28	93604–12M07	PIN, DOWEL	2	2				
29	93210–19MJ1	O-RING	2	2				
30	6D8–15362–00	PLUG, OIL LEVEL	1	1				

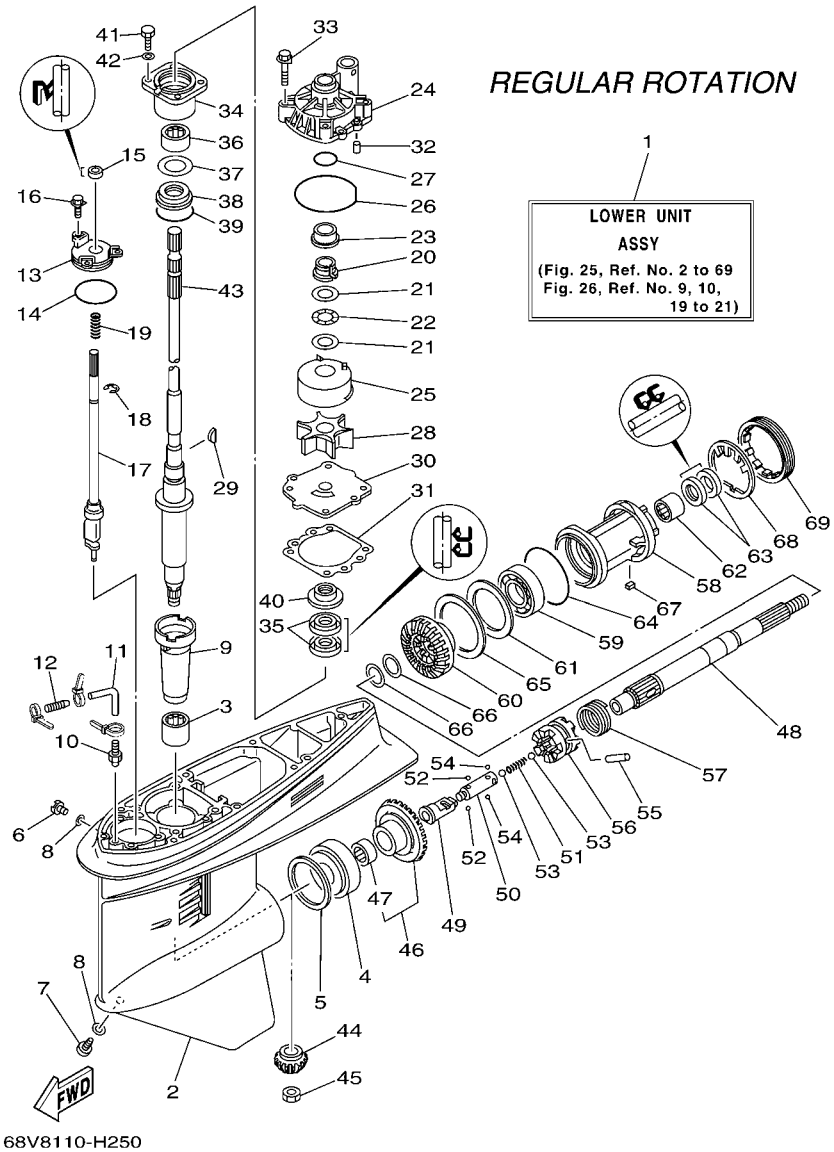

FIG. 25 LOWER CASING & DRIVE 1

REF. NO.	PART NO.	DESCRIPTION	68V8	68W8				REMARKS
1	68V–45300–12–8D	LOWER UNIT ASSY	1					L(20.3"),RH
	68V–45300–32–8D	LOWER UNIT ASSY	1					X(25.3"),RH
2	6E5–45301–05–8D	CASING, LOWER	1					
3	93315–628U9	BEARING	1					
4	93332–000U7	BEARING	1					
5	6E5–45567–01	SHIM (T:0.10MM)	1					UR
	6E5–45567–10	SHIM (T:0.12MM)	1					UR
	6E5–45567–20	SHIM (T:0.15MM)	1					UR
	6E5–45567–30	SHIM (T:0.18MM)	1					UR
	6E5–45567–40	SHIM (T:0.30MM)	1					UR
	6E5–45567–50	SHIM (T:0.40MM)	1					UR
	6E5–45567–60	SHIM (T:0.50MM)	1					UR
6	90340–08002	PLUG, STRAIGHT SCREW	1					
7	688–45341–10	PLUG, DRAIN	1					
8	90430–08020	GASKET	2					
9	6E5–45536–00	SLEEVE, DRIVE SHAFT	1					
10	6E5–45378–00	NIPPLE, HOSE	1					
11	90445–07ME8	HOSE (L80)	1					L(20.3")
	90445–07ME9	HOSE (L120)	1					X(25.3")
12	6E5–83558–10	END, NIPPLE	1					
13	6E5–45321–00	PLATE	1					
14	93210–58144	O-RING	1					
15	93106–09014	OIL SEAL	1					
16	90119–06M10	BOLT, WITH WASHER	3					
17	6L6–44150–01	SHIFT CAM ASSY	1					
18	99001–08600	CIRCLIP	1					
19	90501–11M10	SPRING, COMPRESSION	1					

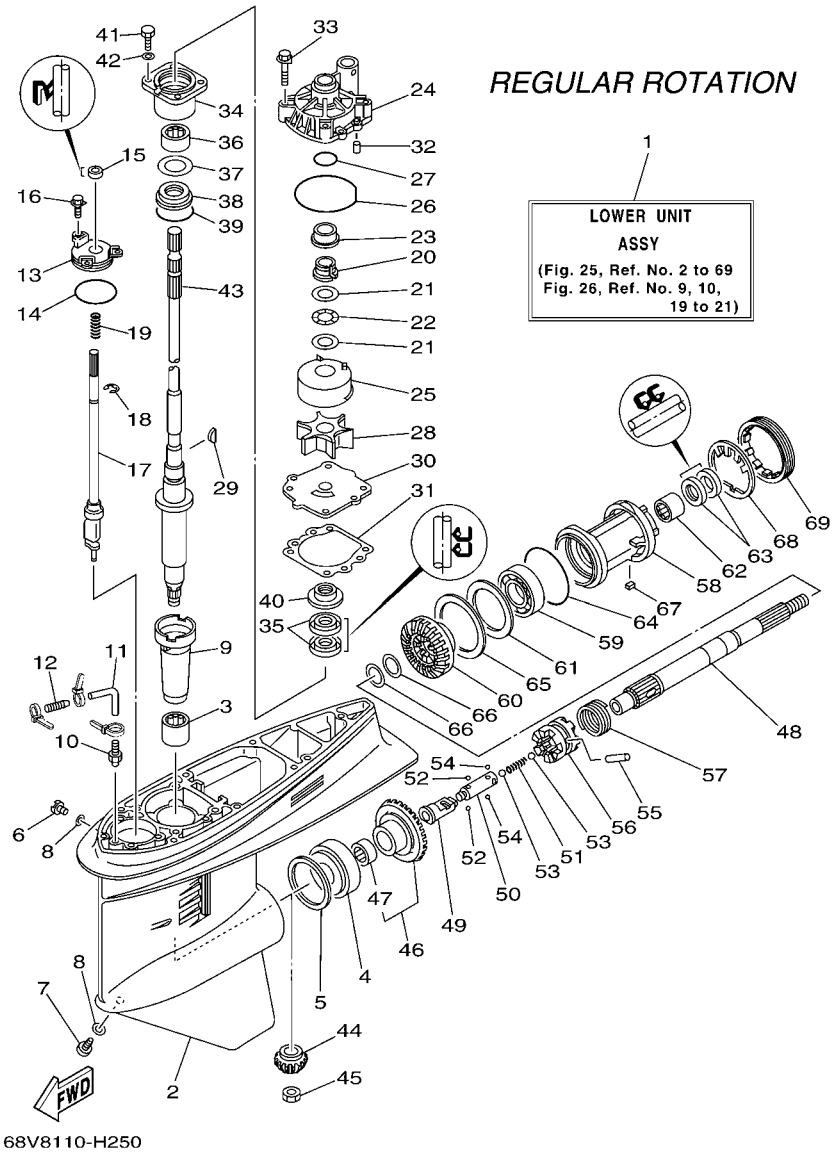

FIG. 25 LOWER CASING & DRIVE 1

REF. NO.	PART NO.	DESCRIPTION	68V8	68W8				REMARKS
20	61A–45538–00	SPACER 1	1					
21	90201–22M01	WASHER, PLATE	2					
22	90206–22M19	WASHER, WAVE	1					
23	61A–45527–00	COLLAR, DRIVE SHAFT	1					
24	61A–44311–01	HOUSING, WATER PUMP	1					
25	61A–44322–02	INSERT, CARTRIDGE	1					
26	93210–86M38	O-RING	1					
27	93210–37160	O-RING	1					
28	6E5–44352–01	IMPELLER	1					
29	90280–04M05	KEY, WOODRUFF	1					
30	68V–44323–00	OUTER PLATE, CARTRIDGE	1					
31	6E5–44315–A0	GASKET, WATER PUMP	1					
32	93606–12019	PIN, DOWEL	2					
33	90119–08M14	BOLT, WITH WASHER	4					
34	6E5–45331–00–94	HOUSING, BEARING	1					
35	93101–28M16	OIL SEAL	2					
36	93317–330U2	BEARING	1					
37	6E5–45587–01	SHIM (T:0.10MM)	1					UR
	6E5–45587–10	SHIM (T:0.12MM)	1					UR
	6E5–45587–20	SHIM (T:0.15MM)	1					UR
	6E5–45587–30	SHIM (T:0.18MM)	1					UR
	6E5–45587–40	SHIM (T:0.30MM)	1					UR
	6E5–45587–50	SHIM (T:0.40MM)	1					UR
	6E5–45587–60	SHIM (T:0.50MM)	1					UR
38	93341–930V2	BEARING	1					
39	93210–55M14	O-RING	1					
40	6E5–45344–00	COVER, OIL SEAL	1					

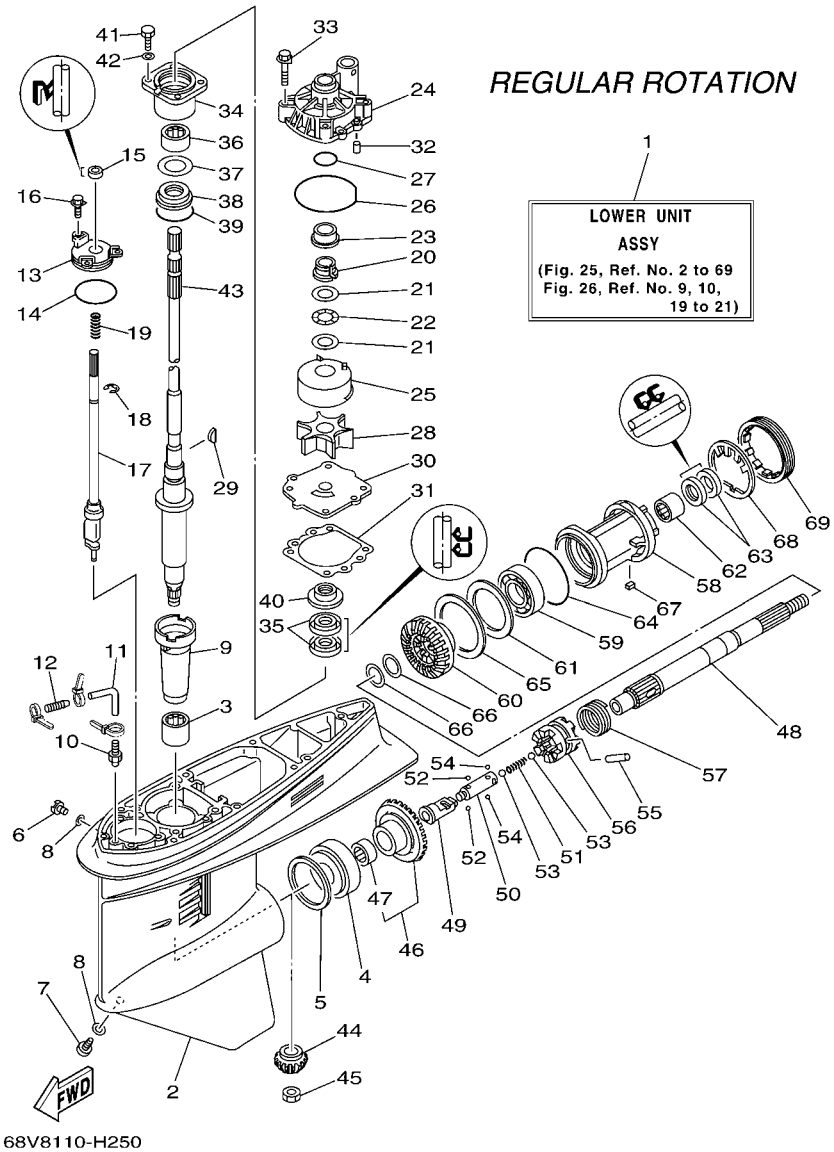

FIG. 25 LOWER CASING & DRIVE 1

REF. NO.	PART NO.	DESCRIPTION	68V8	68W8				REMARKS
41	97095–08025	BOLT	4					
42	92995–08600	WASHER	4					
43	68V–45501–10	DRIVE SHAFT COMP.	1					L(20.3")
	68V–45501–30	DRIVE SHAFT COMP.	1					X(25.3")
44	68V–45551–00	PINION (13T)	1					
45	90170–16M01	NUT	1					
46	68V–45560–00	GEAR 1 (28T)	1					
47	93315–425U7	.BEARING	1					
48	6E5–45611–01	SHAFT, PROPELLER	1					
49	6K1–45641–01	SHIFTER	1					
50	6E5–45634–01	SLIDE, SHIFT	1					
51	90501–16M37	SPRING, COMPRESSION	1					
52	93507–32009	BALL	2					
53	93511–32017	BALL	2					
54	93503–16003	BALL	2					
55	90250–08M07	PIN, STRAIGHT	1					
56	68V–45631–01	CLUTCH, DOG	1					
57	6E5–45633–01	RING, CROSS PIN	1					
58	6E5–45332–00–94	HOUSING, BEARING	1					
59	93306–208U0	BEARING	1					
60	68V–45571–00	GEAR 2 (28T)	1					
61	6E5–45576–00	WASHER, THRUST	1					
62	93315–430U8	BEARING	1					
63	93101–30M17	OIL SEAL	2					
64	93210–86M39	O-RING	1					
65	6L6–45577–00	SHIM (T:0.10MM)	1					UR
	6L6–45577–10	SHIM (T:0.12MM)	1					UR

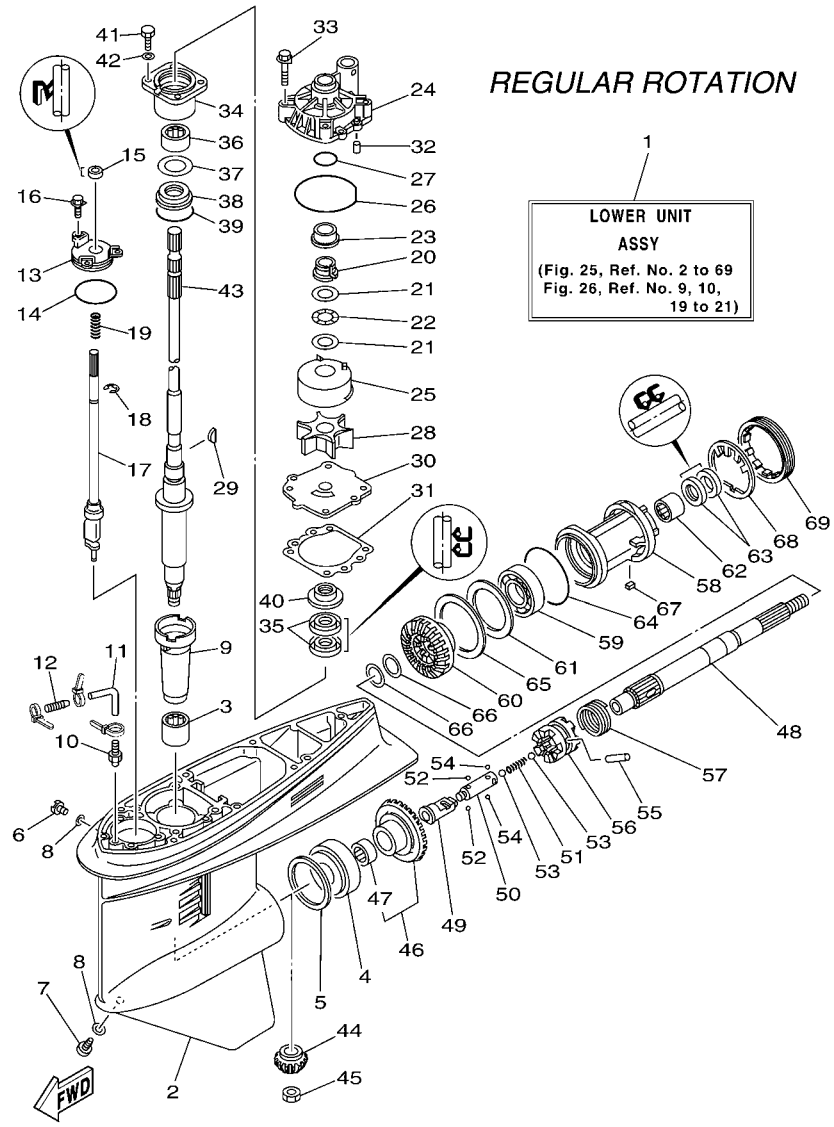

FIG. 25 LOWER CASING & DRIVE 1

REF. NO.	PART NO.	DESCRIPTION	68V8	68W8				REMARKS
65	6L6–45577–20	SHIM (T:0.15MM)	1					UR
	6L6–45577–30	SHIM (T:0.18MM)	1					UR
	6L6–45577–40	SHIM (T:0.30MM)	1					UR
	6L6–45577–50	SHIM (T:0.40MM)	1					UR
	6L6–45577–60	SHIM (T:0.50MM)	1					UR
66	90201–30M92	WASHER, PLATE	2					
67	90282–04010	KEY, STRAIGHT	1					
68	688–45383–02	WASHER, CLAW	1					
69	688–45384–00	NUT	1					

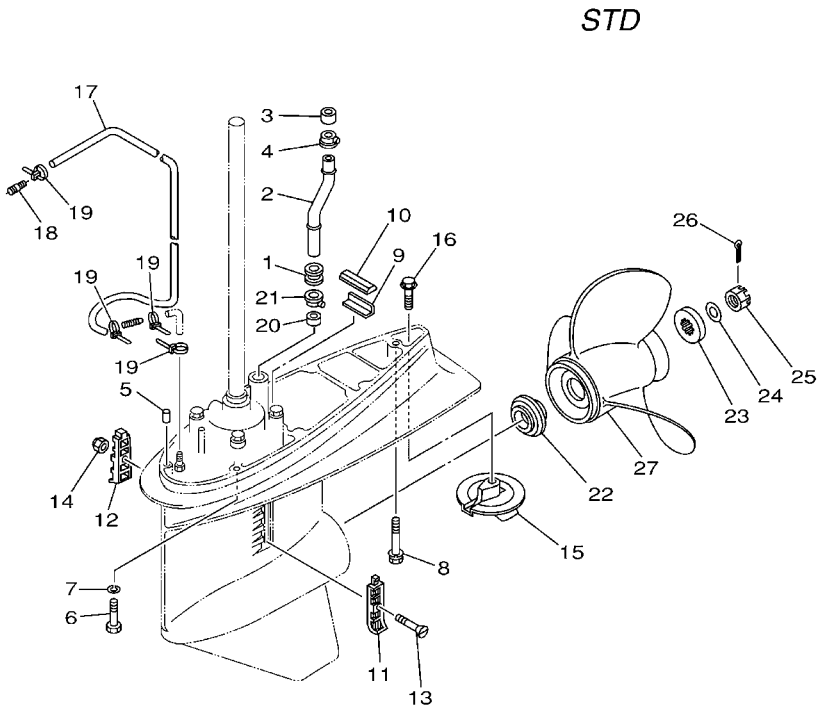

FIG. 26 LOWER CASING & DRIVE 2

REF. NO.	PART NO.	DESCRIPTION	68V8	68W8				REMARKS
1	6E5–44366–00	DAMPER, WATER SEAL	1					
2	68V–44361–11	TUBE, WATER	1					L(20.3")
	68V–44361–30	TUBE, WATER	1					X(25.3")
3	6E5–44365–00	DAMPER, WATER SEAL	1					
4	6E5–44312–00	COVER, WATER PUMP HOUSING	1					
5	93608–12M05	PIN, DOWEL	2					
6	97075–10045	BOLT	6					
7	92995–10100	WASHER	6					
8	90119–10M89	BOLT, WITH WASHER	1					
9	663–45376–00–94	GUIDE, SEAL DAMPER	1					
10	688–45375–00	DAMPER, SEAL	1					
11	688–45214–02	COVER, WATER INLET 1	1					
12	688–45215–02	COVER, WATER INLET 2	1					
13	90152–05M07	SCREW, COUNTERSUNK	1					
14	90185–05002	NUT, SELF-LOCKING	1					
15	6E5–45371–01	TAB-TRIM	1					
16	90105–10M00	BOLT, FLANGE	1					
17	90445–076K2	HOSE (L1550)	1					
18	6E5–83558–00	END, NIPPLE	1					
19	90465–11M10	CLAMP	4					
20	6E5–44365–00	DAMPER, WATER SEAL	1					
21	6E5–44312–00	COVER, WATER PUMP HOUSING	1					
22	63P–45987–00	SPACER	1					
23	688–45997–01	SPACER	1					
24	92990–18200	WASHER	1					
25	90171–18M04	NUT, CASTLE	1					
26	91490–40030	PIN. COTTER	1					

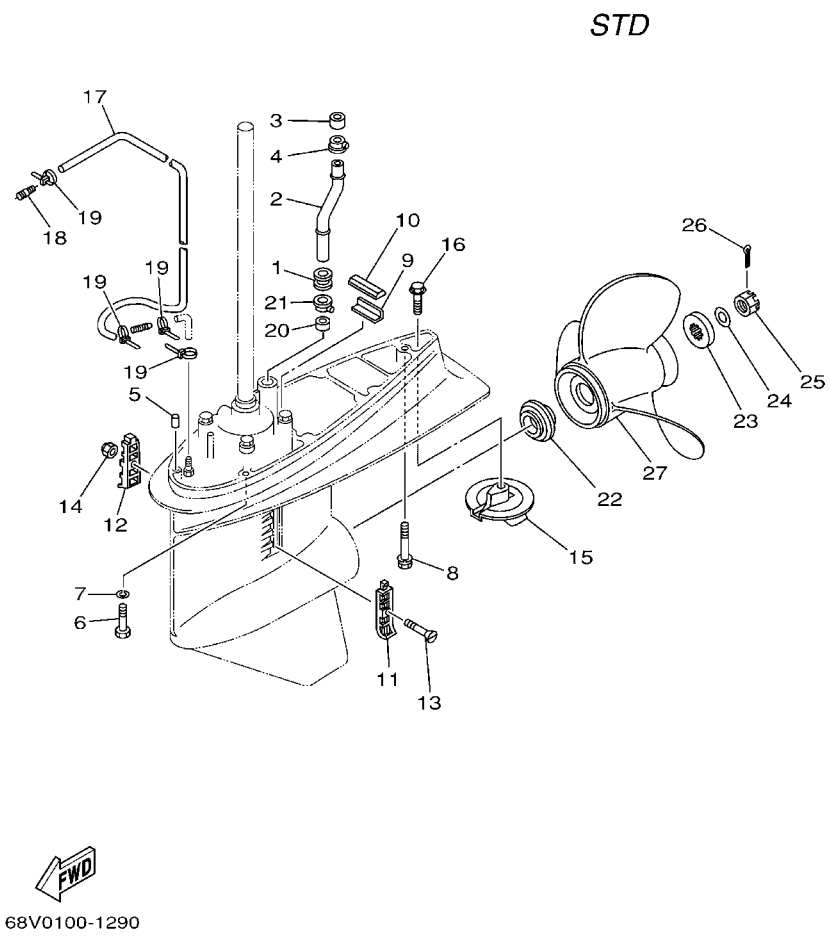

FIG. 26 LOWER CASING & DRIVE 2

REF. NO.	PART NO.	DESCRIPTION	68V8	68W8				REMARKS
27	6E5–45941–00–EL	PROPELLER (3X13"X19"-K)	1					UR
	6E5–45943–00–EL	PROPELLER (3X12-5/8"X21"-K)	1					UR
	6E5–45945–01–EL	PROPELLER (3X13-1/4"X17"-K)	1					UR
	6E5–45947–00–EL	PROPELLER (3X13-1/2"X15"-K)	1					UR
	6E5–45949–00–EL	PROPELLER (3X13-5/8"X13"-K)	1					UR
	6E5–45952–00–EL	PROPELLER (3X13"X23"-K)	1					UR
	6E5–45954–00–EL	PROPELLER (3X14"X11"-K)	1					UR
	6E5–45956–00–EL	PROPELLER (3X13"X25"-K)	1					UR
	688–45930–02–98	PROPELLER (3X13"X17"-K)	1					UR
	688–45932–60–98	PROPELLER (3X13-1/2"X14"-K)	1					UR
	688–45970–03–98	PROPELLER (3X13"X19"-K)	1					UR
	688–45972–02–98	PROPELLER (3X13"X21"-K)	1					UR
	688–45974–02–98	PROPELLER (3X13"X23"-K)	1					UR
	688–45976–01–98	PROPELLER (3X13"X25"-K)	1					UR
	688–45978–60–98	PROPELLER (3X13-1/2"X16"-K)	1					UR
	62A–45970–10	PROPELLER (3X13-1/2"X21"-K)	1					UR
	62A–45972–10	PROPELLER (3X13-1/2"X23"-K)	1					UR
	62A–45974–10	PROPELLER (3X13-1/2"X19"-K)	1					UR

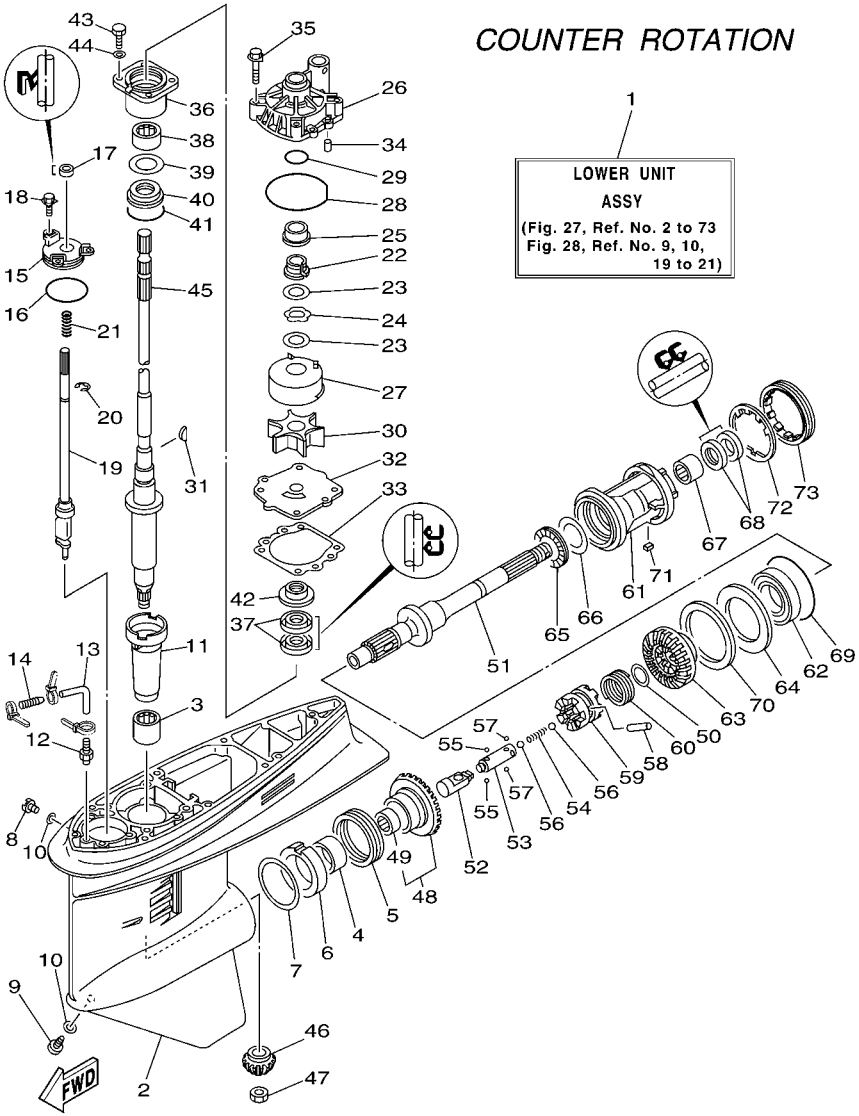

FIG. 27 LOWER CASING & DRIVE 3

REF. NO.	PART NO.	DESCRIPTION	68V8	68W8				REMARKS
1	68W–45300–32–8D	LOWER UNIT ASSY		1				X(25.3"),LH
2	6E5–45301–05–8D	CASING, LOWER		1				
3	93315–628U9	BEARING		1				
4	93315–345W0	BEARING		1				
5	93341–360U8	BEARING		1				
6	6L6–45538–00	SPACER 1		1				
7	6E5–45567–01	SHIM (T:0.10MM)		1				UR
	6E5–45567–10	SHIM (T:0.12MM)		1				UR
	6E5–45567–20	SHIM (T:0.15MM)		1				UR
	6E5–45567–30	SHIM (T:0.18MM)		1				UR
	6E5–45567–40	SHIM (T:0.30MM)		1				UR
	6E5–45567–50	SHIM (T:0.40MM)		1				UR
	6E5–45567–60	SHIM (T:0.50MM)		1				UR
8	90340–08002	PLUG, STRAIGHT SCREW		1				
9	688–45341–10	PLUG, DRAIN		1				
10	90430–08020	GASKET		2				
11	6E5–45536–00	SLEEVE, DRIVE SHAFT		1				
12	6E5–45378–00	NIPPLE, HOSE		1				
13	90445–07ME9	HOSE (L120)		1				X(25.3")
14	6E5–83558–10	END, NIPPLE		1				
15	6E5–45321–00	PLATE		1				
16	93210–58144	O-RING		1				
17	93106–09014	OIL SEAL		1				
18	90119–06M10	BOLT, WITH WASHER		3				
19	6E5–44150–02	SHIFT CAM ASSY		1				
20	99001–08600	CIRCLIP		1				
21	90501–11M10	SPRING, COMPRESSION		1				

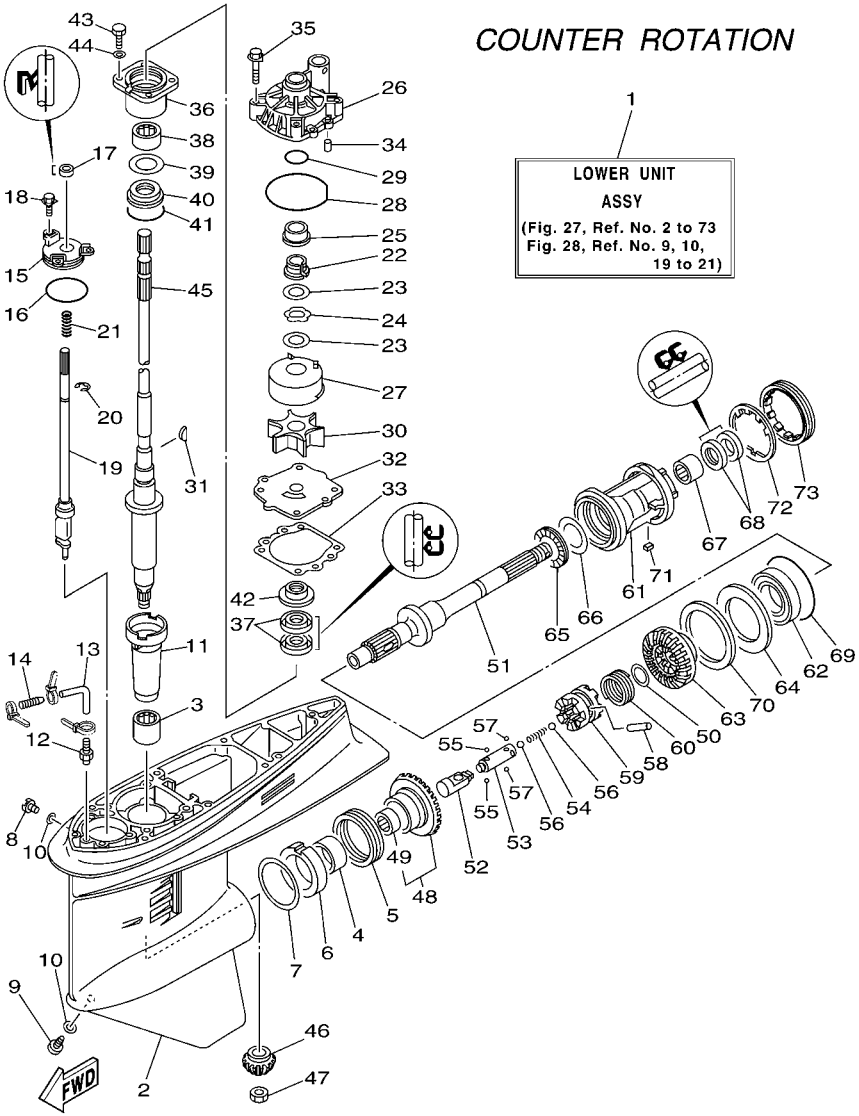

FIG. 27 LOWER CASING & DRIVE 3

REF. NO.	PART NO.	DESCRIPTION	68V8	68W8				REMARKS
22	61A–45538–00	SPACER 1		1				
23	90201–22M01	WASHER, PLATE		2				
24	90206–22M19	WASHER, WAVE		1				
25	61A–45527–00	COLLAR, DRIVE SHAFT		1				
26	61A–44311–01	HOUSING, WATER PUMP		1				
27	61A–44322–02	INSERT, CARTRIDGE		1				
28	93210–86M38	O-RING		1				
29	93210–37160	O-RING		1				
30	6E5–44352–01	IMPELLER		1				
31	90280–04M05	KEY, WOODRUFF		1				
32	68V–44323–00	OUTER PLATE, CARTRIDGE		1				
33	6E5–44315–A0	GASKET, WATER PUMP		1				
34	93606–12019	PIN, DOWEL		2				
35	90119–08M14	BOLT, WITH WASHER		4				
36	6E5–45331–00–94	HOUSING, BEARING		1				
37	93101–28M16	OIL SEAL		2				
38	93317–330U2	BEARING		1				
39	6E5–45587–01	SHIM (T:0.10MM)		1				UR
	6E5–45587–10	SHIM (T:0.12MM)		1				UR
	6E5–45587–20	SHIM (T:0.15MM)		1				UR
	6E5–45587–30	SHIM (T:0.18MM)		1				UR
	6E5–45587–40	SHIM (T:0.30MM)		1				UR
	6E5–45587–50	SHIM (T:0.40MM)		1				UR
	6E5–45587–60	SHIM (T:0.50MM)		1				UR
40	93341–930V2	BEARING		1				
41	93210–55M14	O-RING		1				
42	6E5–45344–00	COVER, OIL SEAL		1				

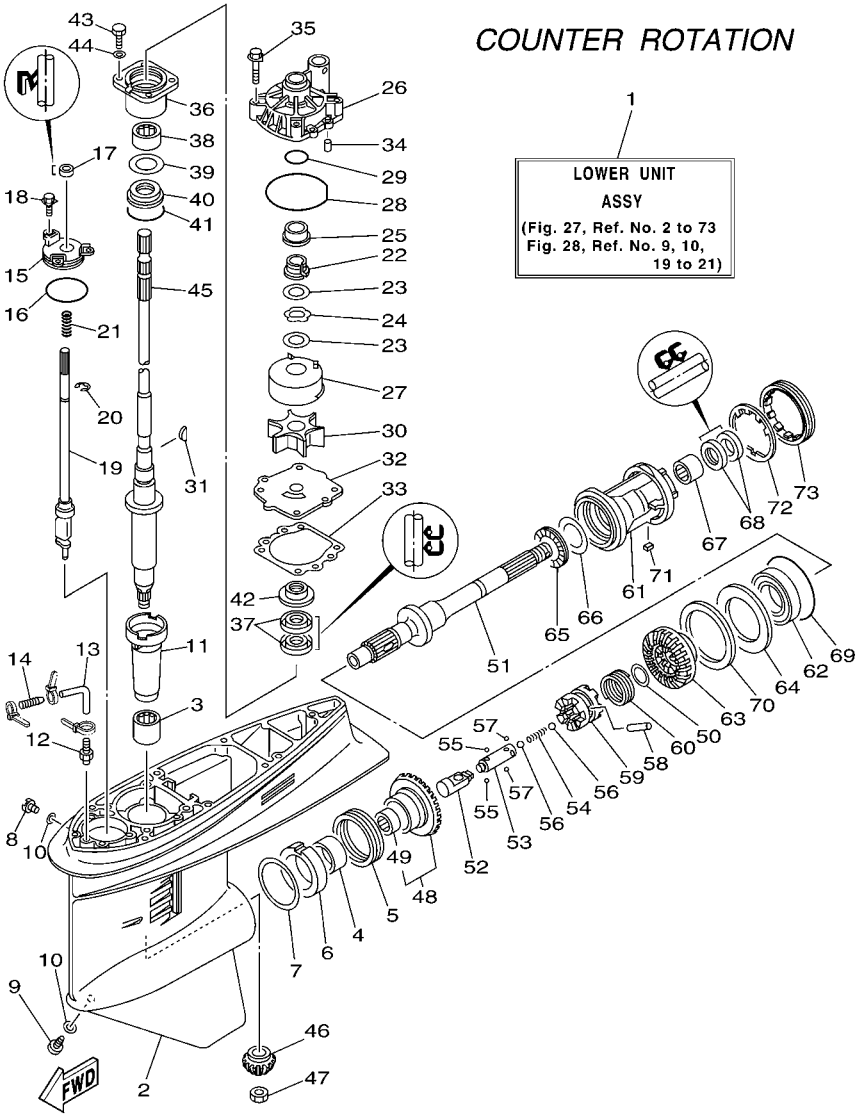

FIG. 27 LOWER CASING & DRIVE 3

REF. NO.	PART NO.	DESCRIPTION	68V8	68W8				REMARKS
43	97095–08025	BOLT		4				
44	92995–08600	WASHER		4				
45	68V–45501–30	DRIVE SHAFT COMP.		1				X(25.3")
46	68V–45551–00	PINION (13T)		1				
47	90170–16M01	NUT		1				
48	68W–45560–00	GEAR 1 (28T)		1				
49	93315–425U7	.BEARING		1				
50	90201–26M00	WASHER, PLATE		1				
51	68W–45611–00	SHAFT, PROPELLER		1				
52	6E5–45641–03	SHIFTER		1				
53	6E5–45634–01	SLIDE, SHIFT		1				
54	90501–16M37	SPRING, COMPRESSION		1				
55	93507–32009	BALL		2				
56	93511–32017	BALL		2				
57	93503–16003	BALL		2				
58	90250–08M07	PIN, STRAIGHT		1				
59	68V–45631–01	CLUTCH, DOG		1				
60	6E5–45633–01	RING, CROSS PIN		1				
61	6L6–45332–00–94	HOUSING, BEARING		1				
62	93332–000V7	BEARING		1				
63	68W–45570–10	GEAR 2 (28T)		1				
64	6L6–45576–00	WASHER, THRUST		1				
65	93341–440U5	BEARING		1				
66	6K1–45578–01	SHIM (T:0.10MM)		1				UR
	6K1–45578–10	SHIM (T:0.12MM)		1				UR
	6K1–45578–20	SHIM (T:0.15MM)		1				UR
	6K1–45578–30	SHIM (T:0.18MM)		1				UR

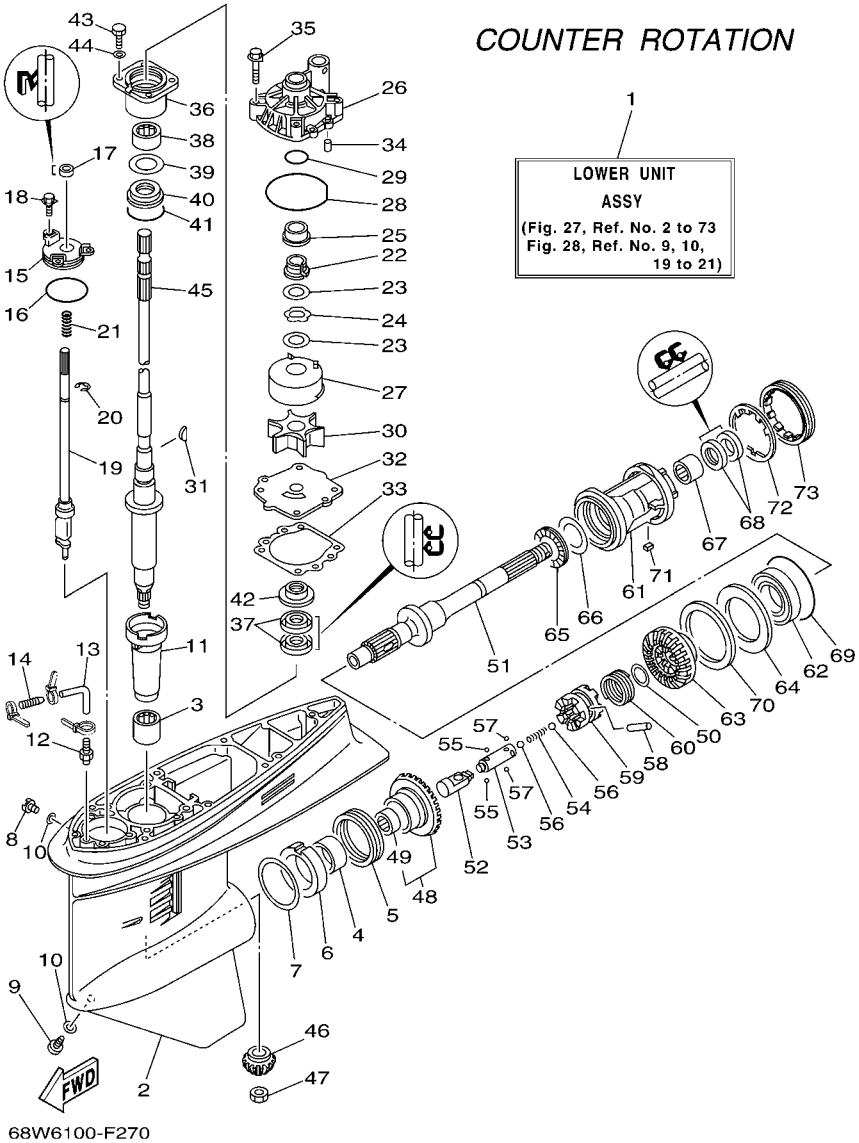

FIG. 27 LOWER CASING & DRIVE 3

REF. NO.	PART NO.	DESCRIPTION	68V8	68W8				REMARKS
66	6K1–45578–40	SHIM (T:0.30MM)		1				UR
	6K1–45578–50	SHIM (T:0.40MM)		1				UR
	6K1–45578–60	SHIM (T:0.50MM)		1				UR
67	93315–43061	BEARING		1				
68	93101–30M17	OIL SEAL		2				
69	93210–86M39	O-RING		1				
70	6L6–45577–00	SHIM (T:0.10MM)		1				UR
	6L6–45577–10	SHIM (T:0.12MM)		1				UR
	6L6–45577–20	SHIM (T:0.15MM)		1				UR
	6L6–45577–30	SHIM (T:0.18MM)		1				UR
	6L6–45577–40	SHIM (T:0.30MM)		1				UR
	6L6–45577–50	SHIM (T:0.40MM)		1				UR
	6L6–45577–60	SHIM (T:0.50MM)		1				UR
71	90282–04010	KEY, STRAIGHT		1				
72	688–45383–02	WASHER, CLAW		1				
73	688–45384–00	NUT		1				

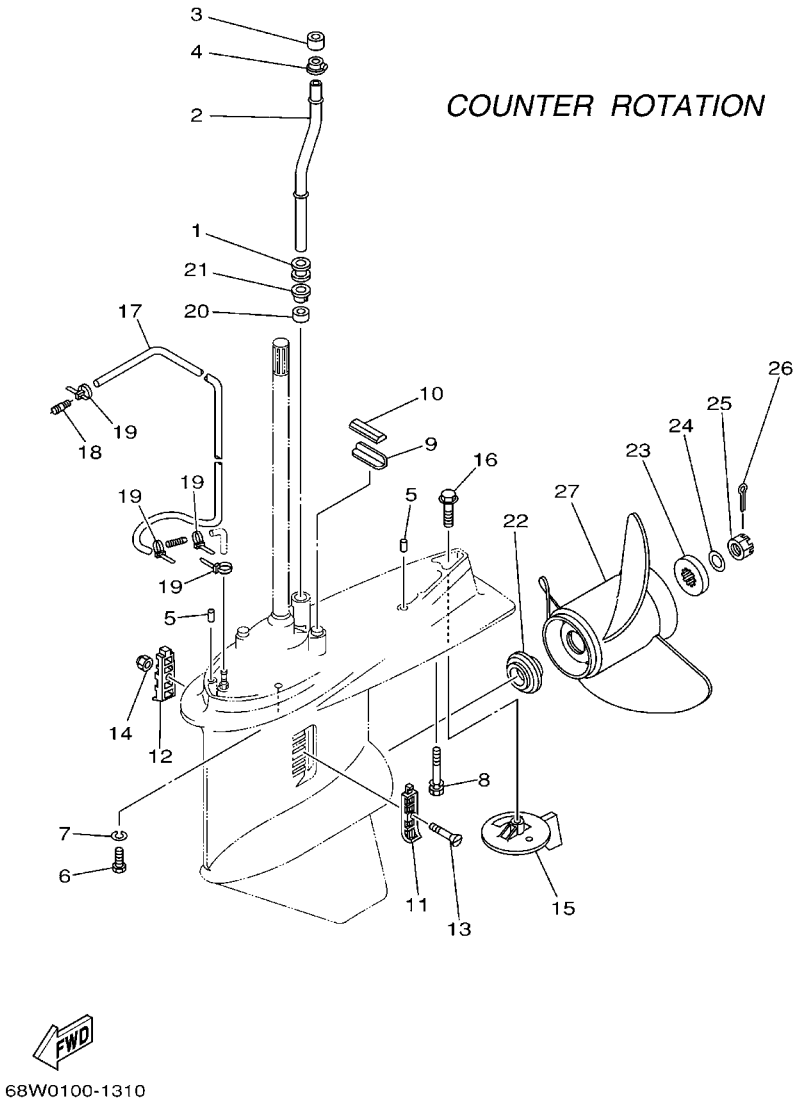

FIG. 28 LOWER CASING & DRIVE 4

REF. NO.	PART NO.	DESCRIPTION	68V8	68W8				REMARKS
1	6E5–44366–00	DAMPER, WATER SEAL		1				
2	68V–44361–30	TUBE, WATER		1				X(25.3")
3	6E5–44365–00	DAMPER, WATER SEAL		1				
4	6E5–44312–00	COVER, WATER PUMP HOUSING		1				
5	93608–12M05	PIN, DOWEL		2				
6	97075–10045	BOLT		6				
7	92995–10100	WASHER		6				
8	90119–10M89	BOLT, WITH WASHER		1				
9	663–45376–00–94	GUIDE, SEAL DAMPER		1				
10	688–45375–00	DAMPER, SEAL		1				
11	688–45214–02	COVER, WATER INLET 1		1				
12	688–45215–02	COVER, WATER INLET 2		1				
13	90152–05M07	SCREW, COUNTERSUNK		1				
14	90185–05002	NUT, SELF-LOCKING		1				
15	6L6–45371–00	TAB-TRIM		1				
16	90105–10M00	BOLT, FLANGE		1				
17	90445–076K2	HOSE (L1550)		1				
18	6E5–83558–00	END, NIPPLE		1				
19	90465–11M10	CLAMP		4				
20	6E5–44365–00	DAMPER, WATER SEAL		1				
21	6E5–44312–00	COVER, WATER PUMP HOUSING		1				
22	63P–45987–00	SPACER		1				
23	688–45997–01	SPACER		1				
24	92990–18200	WASHER		1				
25	90171–18M04	NUT, CASTLE		1				
26	91490–40030	PIN. COTTER		1				
27	6L6–45930–01–98	PROPELLER (3X13"X17"-KL)		1				UR

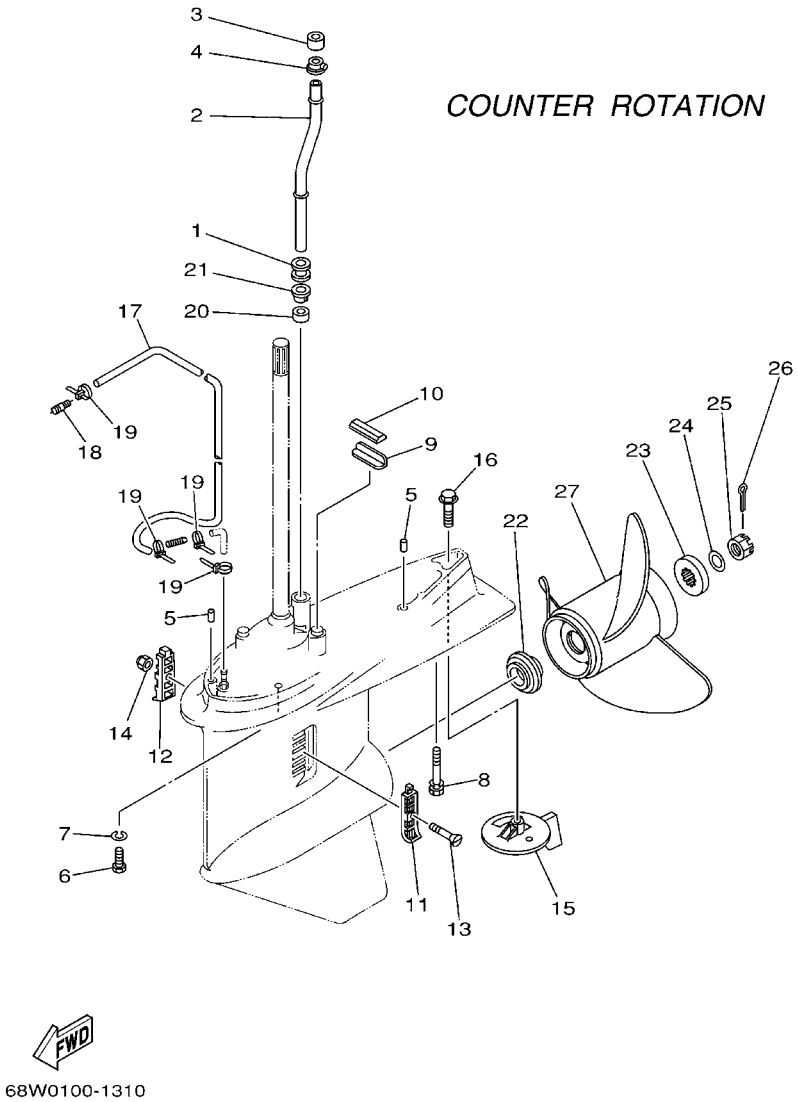

FIG. 28 LOWER CASING & DRIVE 4

REF. NO.	PART NO.	DESCRIPTION	68V8	68W8				REMARKS
27	6L6–45970–00–98	PROPELLER (3X13"X19"-KL)		1				UR
	6L6–45972–00–98	PROPELLER (3X13"X21"-KL)		1				UR

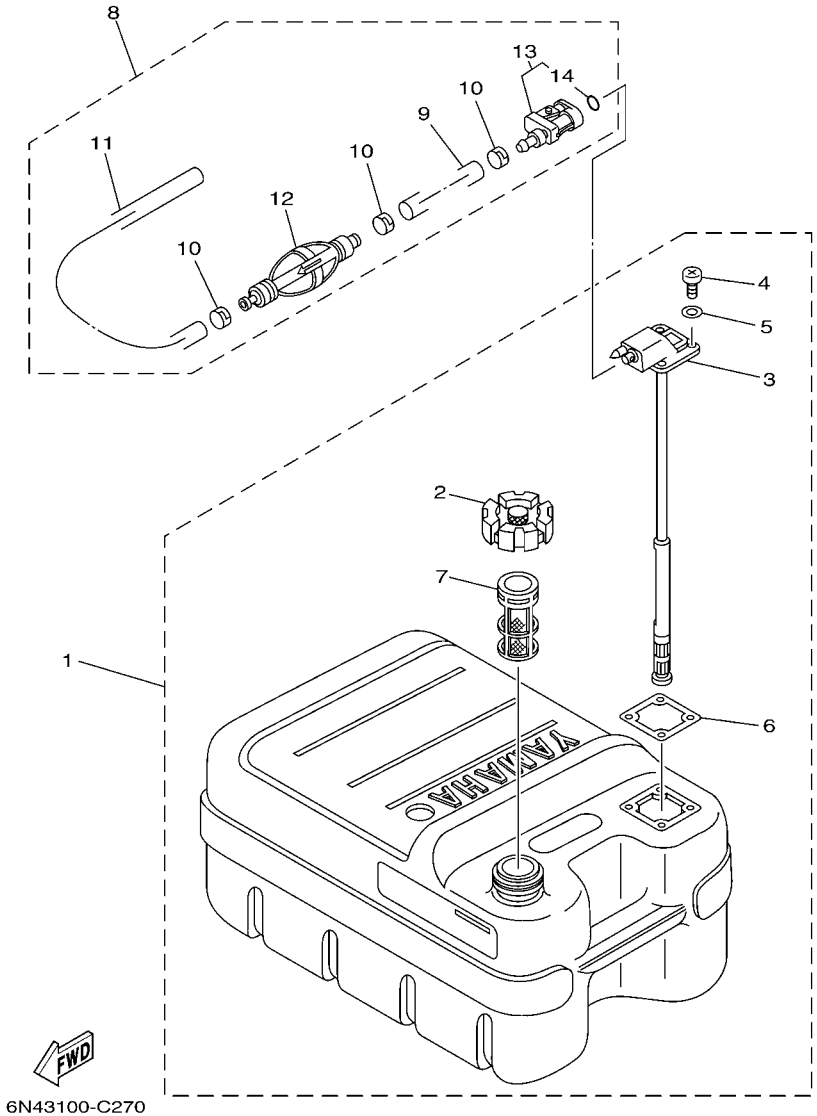

FIG. 29 FUEL TANK 1

REF. NO.	PART NO.	DESCRIPTION	68V8	68W8				REMARKS
1	6YJ–24201–10	FUEL TANK ASSY (24L)	1	1				AP FOR CAR(EPA)
2	6YJ–24610–01	.CAP ASSY	1	1				
3	6Y1–24260–12	.FUEL METER ASSY	1	1				WITH INDICATOR
4	90157–05M19	.SCREW, PAN HEAD	4	4				
5	6Y1–24329–00	.SEAL	4	4				
6	6Y1–24268–00	.GASKET, FUEL METER	1	1				
7	6YJ–24167–00	.STRAINER	1	1				
8	6Y2–24306–45	FUEL PIPE COMP. 1	1	1				AP FOR CAR(EPA)
9	90445–13M01	.HOSE (L2050)	1	1				
10	6E5–24351–51	.BAND 1	3	3				
11	90445–13M35	.HOSE (L250)	1	1				
12	6Y2–24360–60	.PRIMER PUMP ASSY	1	1				
13	6Y2–24305–06	.FUEL PIPE JOINT COMP. 2	1	1				
14	93210–08287	..O-RING	1	1				

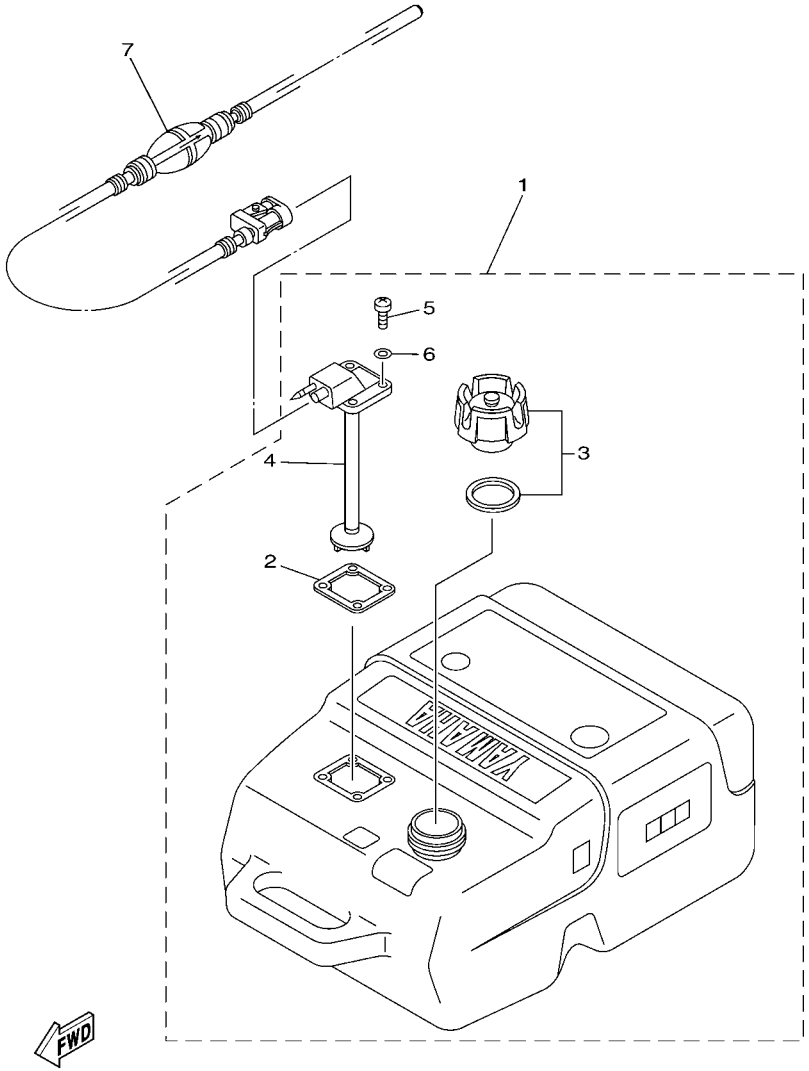

6D71300-D320

FIG. 30 FUEL TANK 2

REF. NO.	PART NO.	DESCRIPTION	68V8	68W8				REMARKS
1	6YK–24201–03	FUEL TANK ASSY (25L)	1	1				AP FOR CAR(CE)
2	6YL–24268–01	.GASKET, FUEL METER	1	1				
3	6YK–24610–01	.CAP ASSY	1	1				
4	6YK–24260–01	.FUEL METER ASSY	1	1				
5	90157–05M16	.SCREW, PAN HEAD	4	4				
6	6YL–24329–00	.SEAL	4	4				
7	6YK–24306–44	FUEL PIPE COMP. 1	1	1				AP FOR CAR(CE)

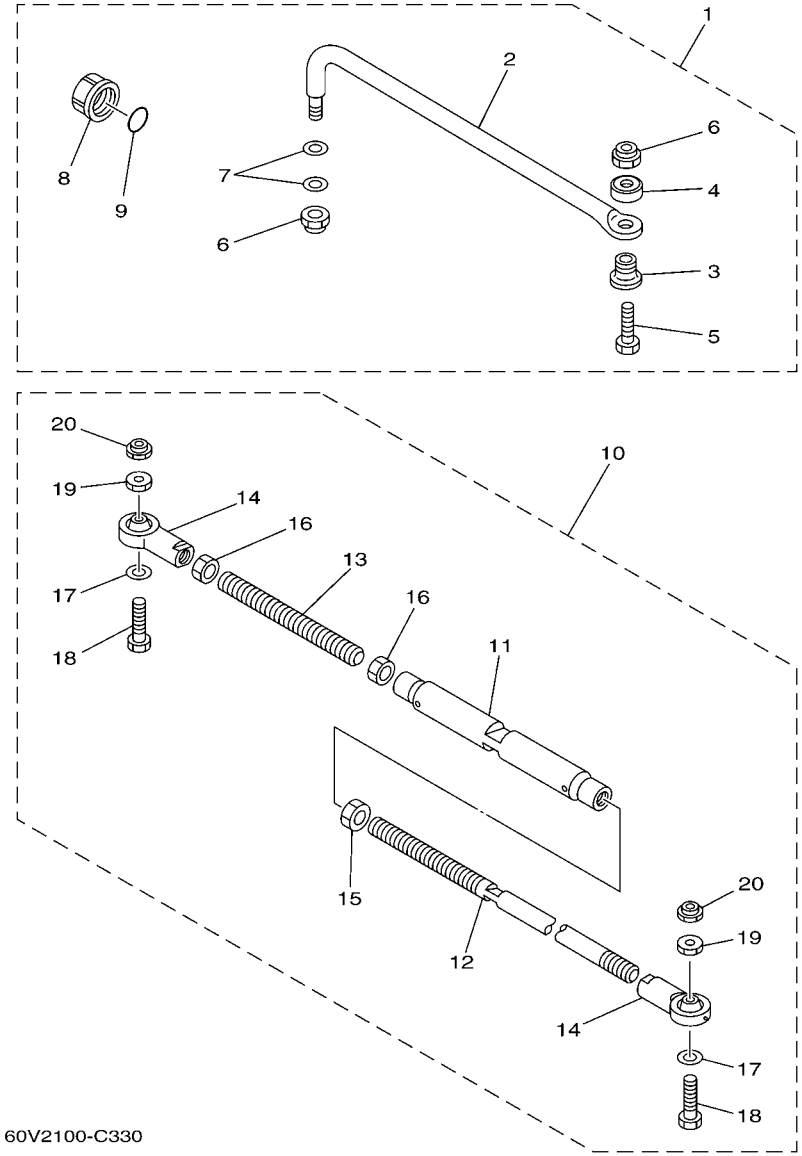

FIG. 31 STEERING GUIDE

REF. NO.	PART NO.	DESCRIPTION	68V8	68W8				REMARKS
1	6E5–61350–02	STEERING GUIDE ATTACHMENT KIT	1	1				AP 68W8-OCE,CAR
2	6E5–61351–01	.ROD, STEERING LINK	1	1				
3	90387–10M61	.COLLAR	1	1				
4	90560–12M01	.SPACER	1	1				
5	6E5–61355–00	.BOLT	1	1				
6	90185–09M01	.NUT, SELF-LOCKING	2	2				
7	90201–10M20	.WASHER, PLATE	2	2				
8	6E5–43145–01	.CAP, CLAMP BRACKET	1	1				
9	93210–16275	.O-RING	1	1				
10	6E5–61301–01	TWIN KIT (L:600-800MM)		1				AP
11	6E5–61313–00	.ADJUSTER		1				
12	6E5–61311–11	.TIE BAR		1				
13	6E5–61315–00	.TIE BAR		1				
14	6E5–61303–00	.STEERING AXLE COMP.		2				
15	90170–14M06	.NUT		1				
16	95380–14700	.NUT		2				
17	90201–10M76	.WASHER, PLATE		2				
18	90101–09M70	.BOLT		2				
19	90170–09M05	.NUT		2				
20	90185–09M01	.NUT, SELF-LOCKING		2				

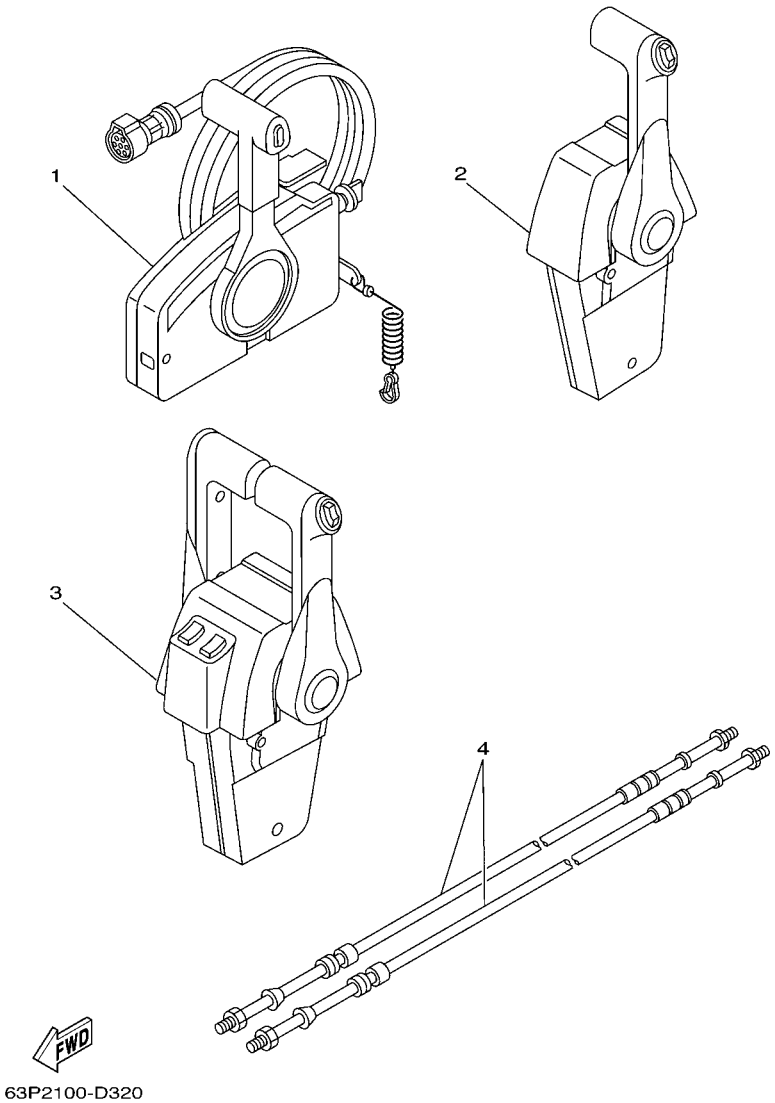

FIG. 32 REMOTE CONTROL BOX

REF. NO.	PART NO.	DESCRIPTION	68V8	68W8				REMARKS
1	703–48205–17	REMOTE CONTROL ASSY (10P)	1					AP WITH PT/T SW.
	703–48207–17	REMOTE CONTROL ASSY (10P)	1					AP BRA WITH PT/T SW.
2	704–48205–P1	REMOTE CONTROL ASSY (RIGHT)	1					AP CAR WITH PT/T SW.
3	704–48207–P1	REMOTE CONTROL ASSY		1				AP WITH PT/T SW.
4	701–48320–50	CABLE, REMOTE CONTROL L=15F	2	2				UR
	701–48320–60	CABLE, REMOTE CONTROL L=16F	2	2				UR
	701–48320–80	CABLE, REMOTE CONTROL L=17F	2	2				UR
	701–48350–00	CABLE, REMOTE CONTROL L=21F	2	2				UR
	701–48350–20	CABLE, REMOTE CONTROL L=23F	2	2				UR

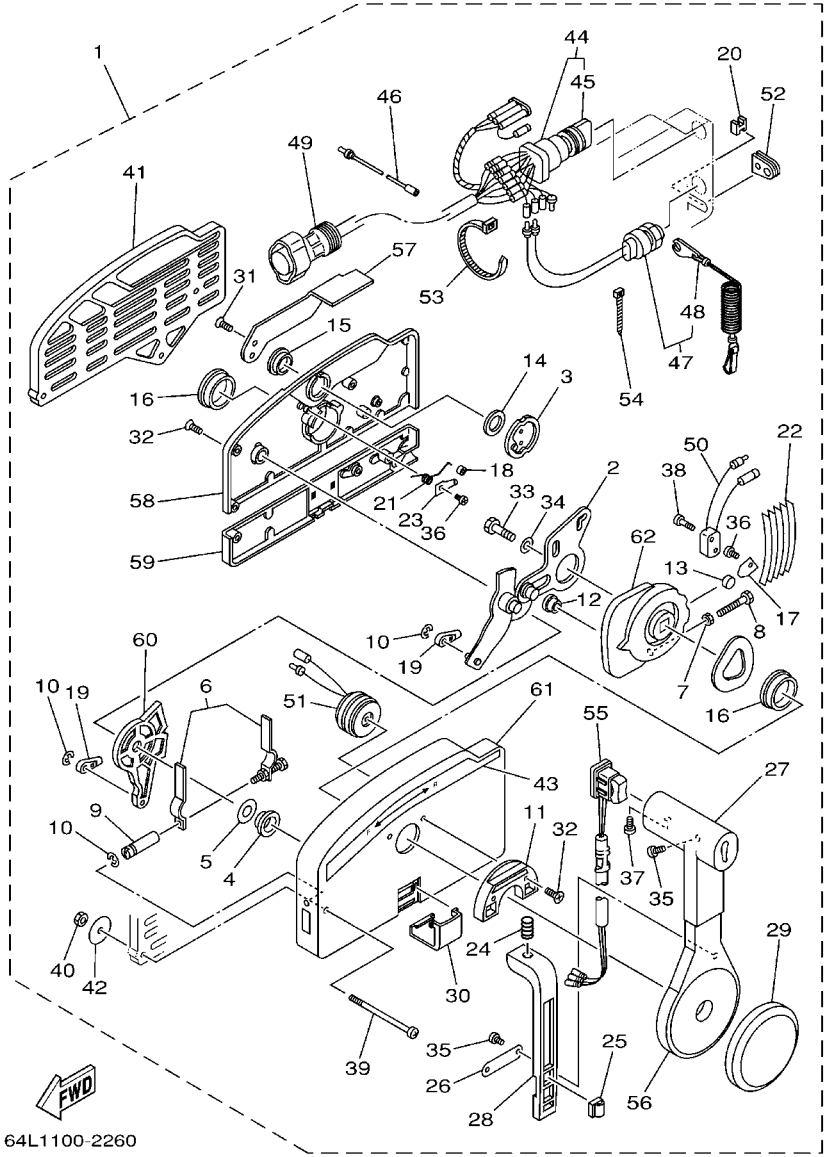

64L1100-2260

FIG. 33 REMOTE CONTROL ASSY 1

REF. NO.	PART NO.	DESCRIPTION	68V8	68W8				REMARKS
1	703–48205–17	REMOTE CONTROL ASSY (10P)	1					AP WITH PT/T SW.
	703–48207–17	REMOTE CONTROL ASSY (10P)	1					AP BRA WITH PT/T SW.
2	703–48261–01	.ARM, THROTTLE	1					
3	703–48153–00	.SHAFT, FREE ACCEL.	1					
4	703–48235–00	.BUSHING	1					
5	703–48268–00	.SPACER	1					
6	703–48264–00	.FRICTION, THROTTLE	1					
7	95380–05600	.NUT	1					
8	97380–05025	.BOLT	1					
9	703–48265–00	.SHAFT, FRICTION	1					
10	93430–06024	.CIRCLIP	3					
11	703–48245–00	.PLATE, LOCK	1					
12	703–48252–00	.ROLLER, CAM	1					
13	701–48248–00	.ROLLER, FREE ACCEL.	1					
14	703–48198–00	.WASHER, WAVE	1					
15	703–48243–00	.BUSHING	1					
16	703–48236–00	.BUSHING 1	2					
17	703–48189–00	.RETAINER	1					
18	703–48234–00	.ROLLER, DETENT	1					
19	703–48345–01	.CABLE END, REMOTE CONTROL 2	2					
20	703–48358–00	.ANCHOR, CABLE	1					
21	703–48244–00	.SPRING, FREE ACCEL.	1					
22	703–48238–00	.SPRING, DETENT	5					
23	703–48246–00	.SPACER	1					
24	703–48227–00	.SPRING, NEUTRAL LOCK	1					
25	703–82594–00	.CLAMP	1					WITH PT/T SW.
26	703–48226–00	.PLATE, STOPPER	1					

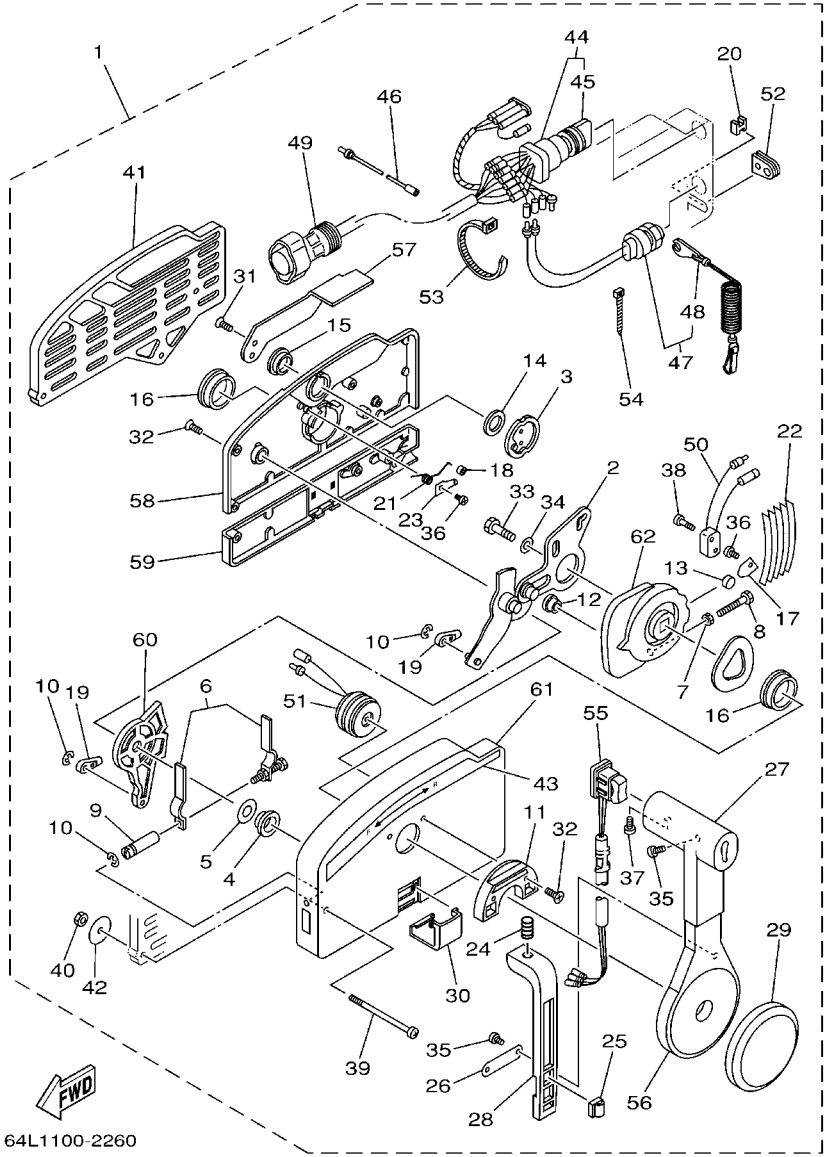

FIG. 33 REMOTE CONTROL ASSY 1

REF. NO.	PART NO.	DESCRIPTION	68V8	68W8				REMARKS
27	703–48222–00	.GRIP, CONTROL LEVER	1					SINGLE
28	703–48223–00	.LOCK, NEUTRAL	1					
29	703–48225–00	.COVER	1					
30	703–48219–00	.COVER, LEAD	1					
31	703–48281–00	.SCREW	2					
32	703–48282–00	.SCREW	7					
33	97380–08030	.BOLT	1					
34	92990–08600	.WASHER, PLATE	1					
35	98580–04010	.SCREW, PAN HEAD	3					
36	98580–04006	.SCREW, PAN HEAD	2					
37	98580–05010	.SCREW, PAN HEAD	1					
38	98580–03015	.SCREW, PAN HEAD	2					
39	703–48291–10	.SCREW (M6)	3					
40	95380–06600	.NUT, HEXAGON	3					
41	703–48293–10	.SPACER, REMOTE CONTROL	1					SINGLE
42	701–48287–00	.WASHER	3					
43	703–48215–00	.GRAPHIC	1					
44	703–82510–43	.MAIN SWITCH ASSY	1					
45	703–82577–00	..CAP, KEY	1					
46	703–82531–00	.WIRE, LEAD (L70)	1					
47	688–82575–01	.ENGINE STOP SWITCH ASSY	1					
48	682–82556–00	..LANYARD, STOP SWITCH	1					
49	688–8258A–20	.EXTENSION, WIRE HARNESS (4.9M)	1					(10P)
50	703–82540–00	.NEUTRAL SWITCH ASSY	1					
51	703–83383–02	.BUZZER	1					
52	703–48284–00	.GROMMET	1					FOR 703-48205-17
	703–48284–10	.GROMMET	1					FOR 703-48207-17

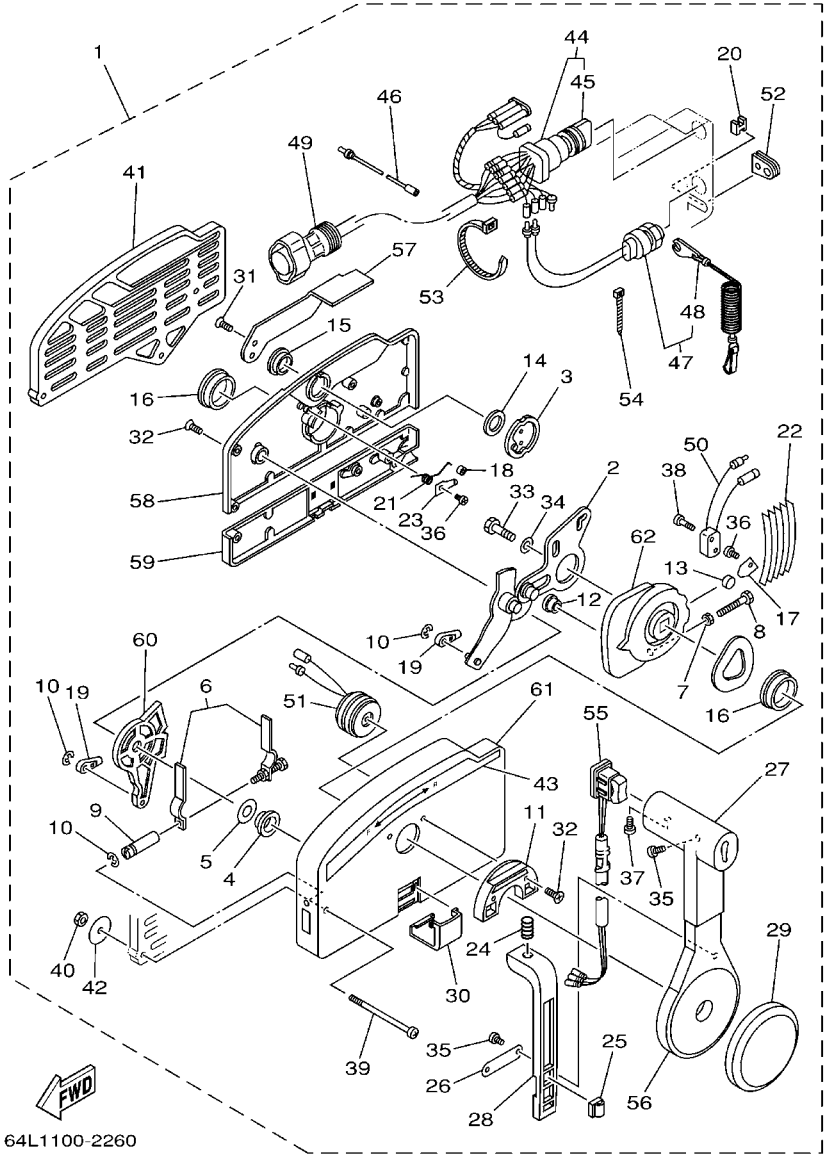

FIG. 33 REMOTE CONTROL ASSY 1

REF. NO.	PART NO.	DESCRIPTION	68V8	68W8				REMARKS
53	703–82591–00	.BAND	1					FOR 703-48205-17
	703–82591–00	.BAND	3					FOR 703-48207-17
54	703–82592–00	.BAND	1					
55	703–82563–02	.TRIM & TILT SWITCH ASSY	1					FOR 703-48205-17
	703–82563–12	.TRIM & TILT SWITCH ASSY	1					FOR 703-48207-17
56	703–48221–00	.LEVER, CONTROL	1					
57	703–48152–00	.KNOB, FREE ACCEL.	1					
58	703–48212–00	.BACK PLATE 1	1					
59	703–48213–00	.BACK PLATE 2	1					
60	703–48271–00	.ARM, SHIFT	1					
61	703–48211–01	.HOUSING,1	1					
62	703–48232–00	.GEAR	1					

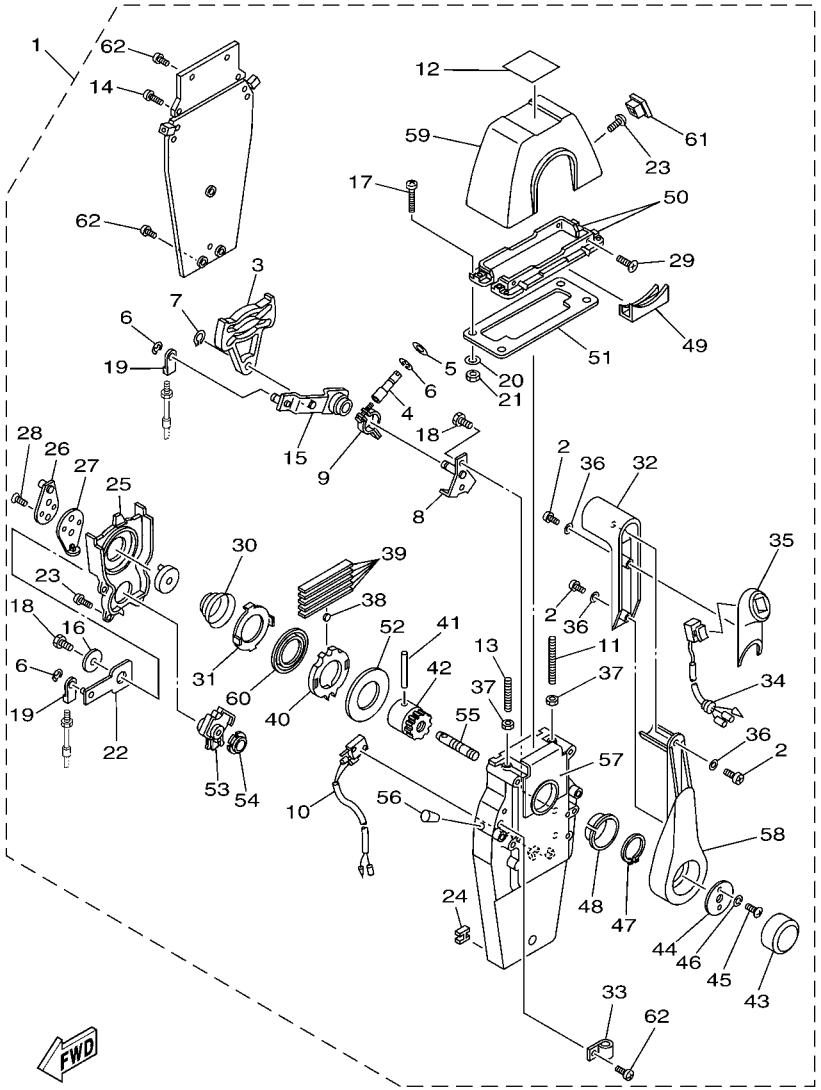

FIG. 34 REMOTE CONTROL ASSY 2

REF. NO.	PART NO.	DESCRIPTION	68V8	68W8				REMARKS
1	704–48205–P1	REMOTE CONTROL ASSY (RIGHT)	1					AP CAR WITH PT/T SW.
2	704–48128–00	.SCREW 2	3					
3	EL8–48251–00	.PLATE, CAM	1					
4	704–48265–00	.SHAFT, FRICTION	1					
5	701–48246–00	.SPACER	1					
6	93430–06024	.CIRCLIP	4					
7	EL8–48259–00	.CIRCLIP 1	1					
8	704–48262–00	.SHAFT, THROTTLE	1					
9	704–48264–00	.THROTTLE, FRICTION	1					
10	704–82540–20	.NEUTRAL SWITCH ASSY	1					
11	EL8–48281–00	.SCREW	1					
12	704–48215–20	.GRAPHIC	1					
13	704–48281–00	.SCREW	1					
14	97890–05025	.SCREW, PAN HEAD	2					
15	704–48261–00	.ARM, THROTTLE	1					
16	EL8–48191–00	.WASHER 1	1					
17	704–48283–00	.SCREW	4					
18	97380–06018	.BOLT	3					
19	703–48345–01	.CABLE END, REMOTE CONTROL 2	2					
20	704–48287–00	.WASHER	4					
21	95380–05600	.NUT	4					
22	704–48271–00	.ARM, SHIFT	1					
23	EL8–48127–00	.SCREW 1	10					
24	703–48358–00	.ANCHOR, CABLE	1					
25	704–48231–00	.HOUSING, GEAR	1					
26	EL8–48241–00	.ARM, DRIVE	1					
27	EL8–48254–00	.STOPPER, THROTTLE ADJUSTING	1					

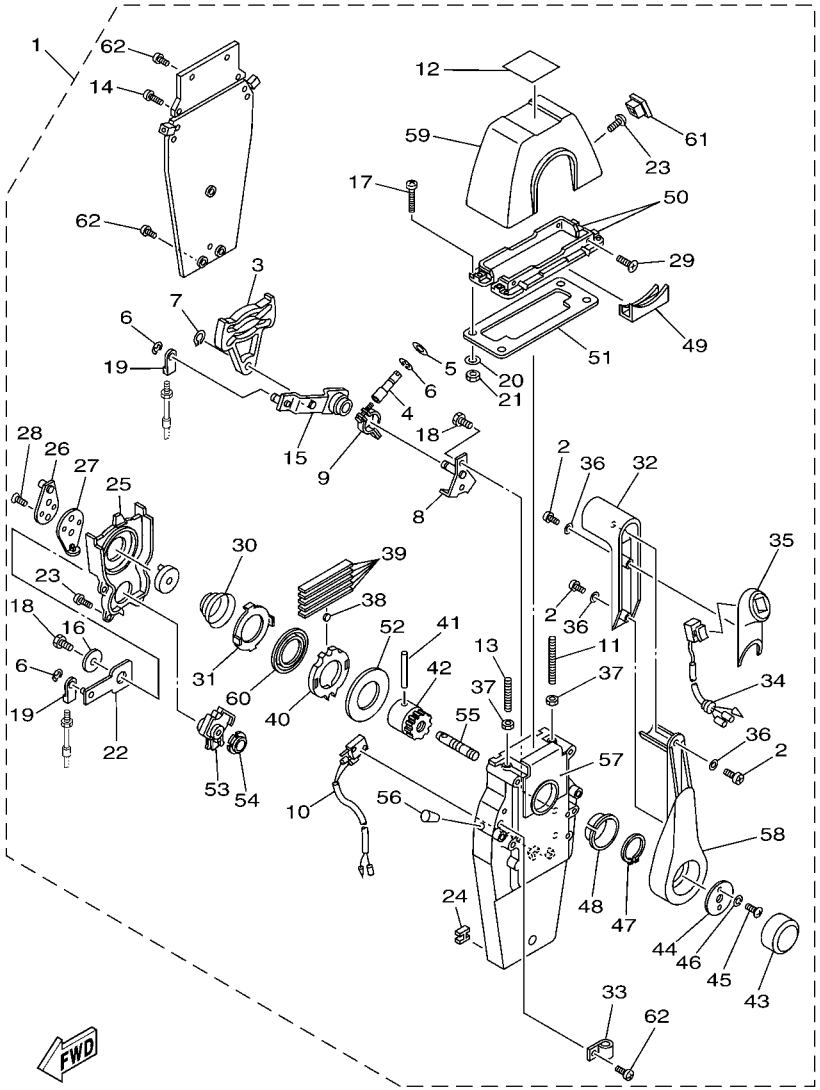

6C23100-F340

FIG. 34 REMOTE CONTROL ASSY 2

REF. NO.	PART NO.	DESCRIPTION	68V8	68W8				REMARKS
28	92780–06020	.SCREW, FLAT HEAD	2					
29	98780–05018	.SCREW, FLAT HEAD	4					
30	EL8–48244–00	.SPRING, FREE ACCEL.	1					
31	EL8–48245–00	.PLATE, LOCK	1					
32	704–48222–P0	.GRIP, CONTROL LEVER	1					
33	704–82594–00	.CLAMP	1					
34	704–82563–41	.TRIM & TILT SWITCH ASSY	1					
35	704–48229–P1	.GRIP, CONTROL LEVER	1					
36	92990–05300	.WASHER, INTERNAL TOOTH	3					
37	95380–06600	.NUT, HEXAGON	2					
38	701–48248–00	.ROLLER, FREE ACCEL.	1					
39	704–48238–00	.SPRING, DETENT	5					
40	704–48232–P1	.GEAR	1					
41	EL8–48164–00	.PIN 2	1					
42	704–48242–10	.SHAFT, DRIVE	1					
43	6X3–48225–20	.COVER	1					
44	704–48192–00	.WASHER 2	1					
45	97890–06018	.SCREW, PAN HEAD	2					
46	92990–06300	.WASHER, INTERNAL TOOTH	2					
47	EL8–48279–00	.CIRCLIP 2	1					
48	704–48234–00	.BUSHING 1	1					
49	704–48219–P0	.COVER, LEAD	1					
50	704–48144–10	.PLATE, STOPPER 2	2					
51	704–48176–00	.GROMMET	1					
52	704–48192–P0	.WASHER 2	1					
53	704–48233–00	.GEAR 2	1					
54	704–48235–00	.BUSHING	1					

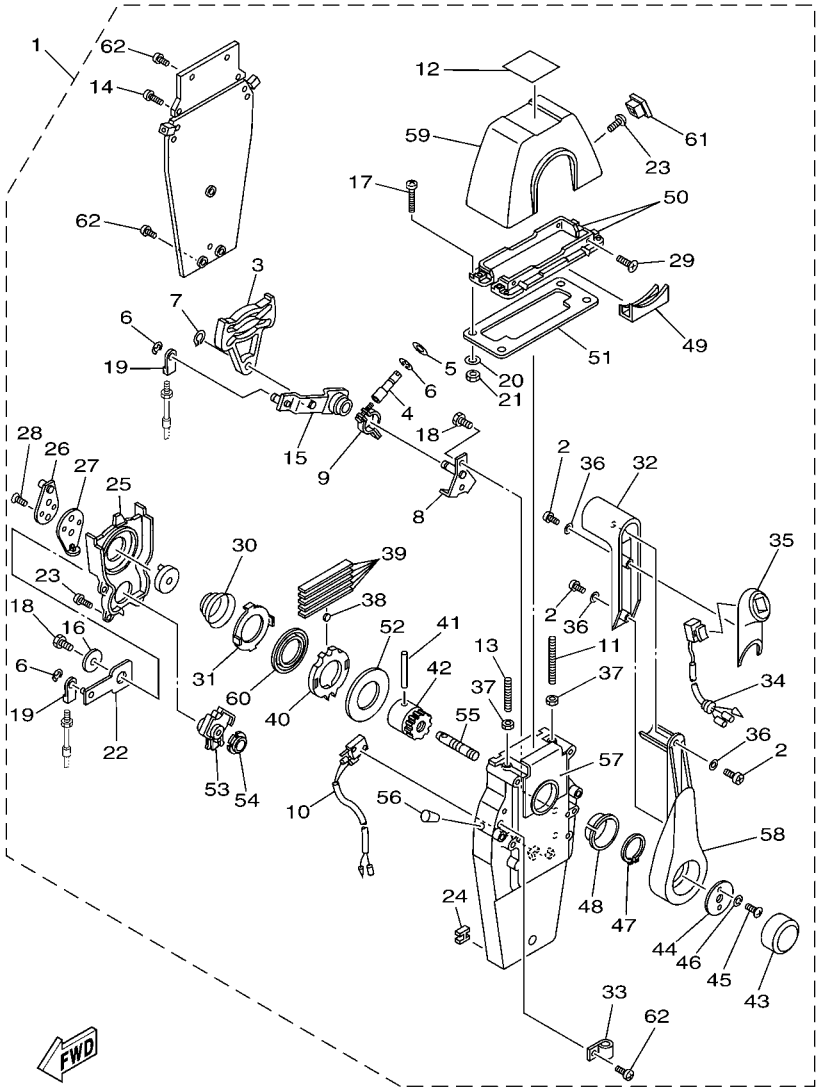

6C23100-F340

FIG. 34 REMOTE CONTROL ASSY 2

REF. NO.	PART NO.	DESCRIPTION	68V8	68W8				REMARKS
55	704–48153–00	.SHAFT, FREE ACCEL.	1					
56	704–48166–00	.PLUG	1					
57	704–48284–P0	.GROMMET	1					
58	704–48221–P0	.LEVER, CONTROL	1					
59	704–48119–31	.COVER	1					
60	704–48178–10	.PLATE, SHIFT	1					
61	704–48167–01	.PLUG	1					
62	97890–05016	.SCREW, PAN HEAD	3					

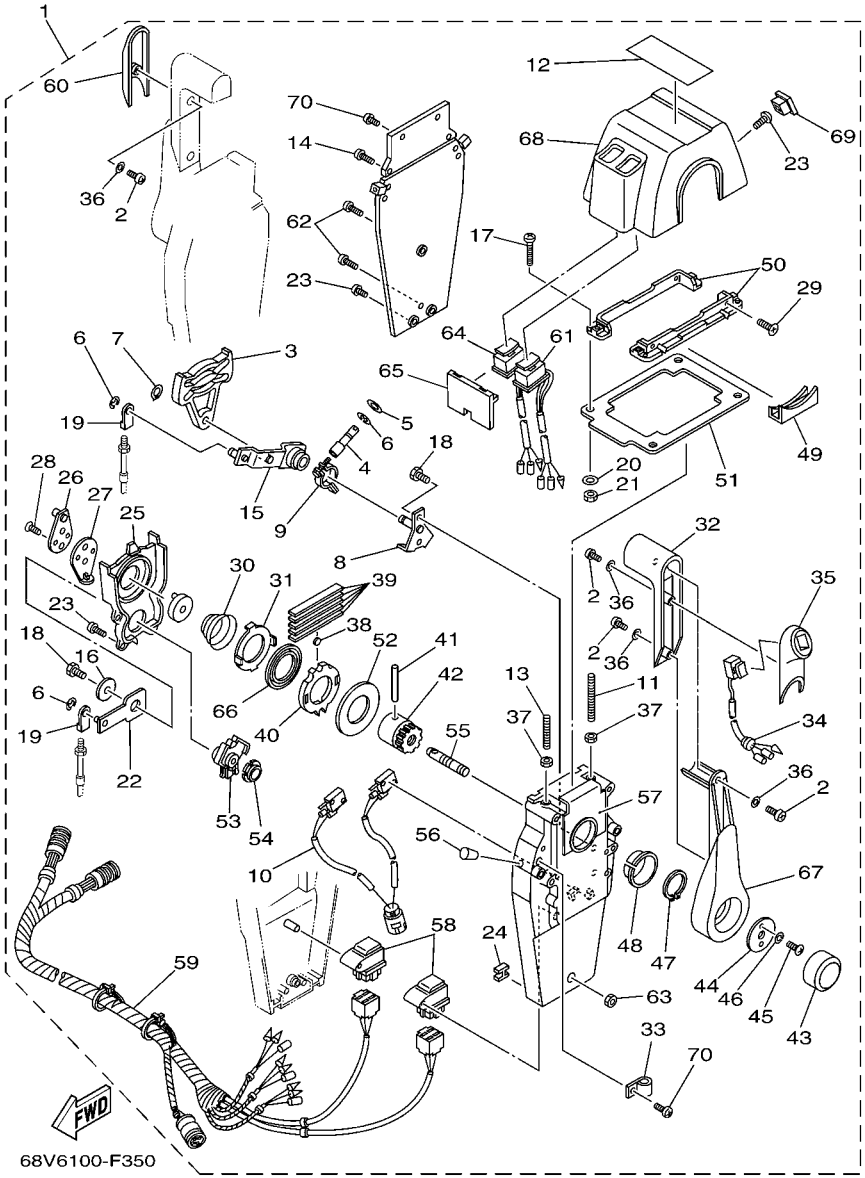

FIG. 35 REMOTE CONTROL ASSY 3

REF. NO.	PART NO.	DESCRIPTION	68V8	68W8				REMARKS
1	704–48207–P1	REMOTE CONTROL ASSY		1				AP WITH PT/T SW.
2	704–48128–00	.SCREW 2		6				
3	EL8–48251–00	.PLATE, CAM		2				
4	704–48265–00	.SHAFT, FRICTION		2				
5	701–48246–00	.SPACER		2				
6	93430–06024	.CIRCLIP		8				
7	EL8–48259–00	.CIRCLIP 1		2				
8	704–48262–00	.SHAFT, THROTTLE		2				
9	704–48264–00	.THROTTLE, FRICTION		2				
10	704–82540–30	.NEUTRAL SWITCH ASSY		1				
11	EL8–48281–00	.SCREW		2				
12	704–48215–30	.GRAPHIC		1				
13	704–48281–00	.SCREW		2				
14	97890–05025	.SCREW, PAN HEAD		4				
15	704–48261–00	.ARM, THROTTLE		2				
16	EL8–48191–00	.WASHER 1		2				
17	704–48283–00	.SCREW		4				
18	97380–06018	.BOLT		6				
19	703–48345–01	.CABLE END, REMOTE CONTROL 2		4				
20	704–48287–00	.WASHER		4				
21	95380–05600	.NUT		4				
22	704–48271–00	.ARM, SHIFT		2				
23	EL8–48127–00	.SCREW 1		18				
24	703–48358–00	.ANCHOR, CABLE		2				
25	704–48231–00	.HOUSING, GEAR		2				
26	EL8–48241–00	.ARM, DRIVE		2				
27	EL8–48254–00	.STOPPER, THROTTLE ADJUSTING		2				

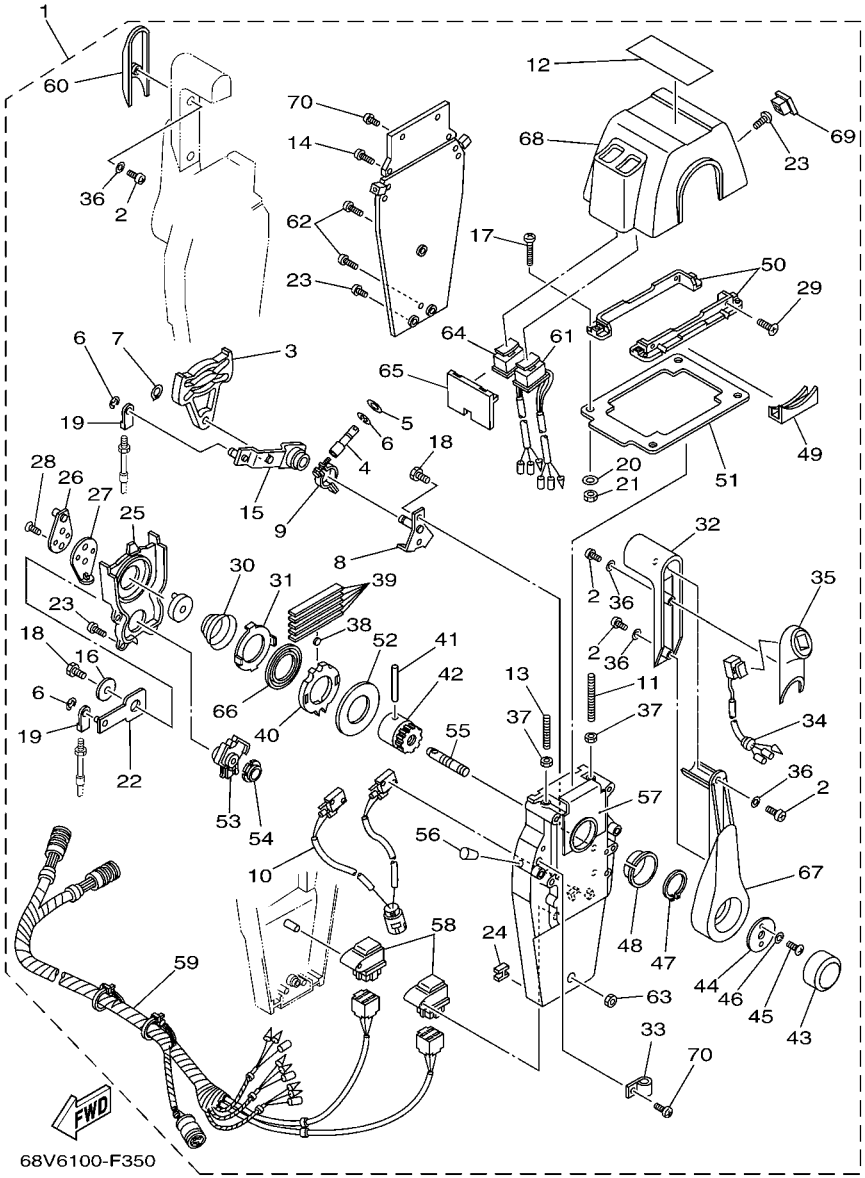

FIG. 35 REMOTE CONTROL ASSY 3

REF. NO.	PART NO.	DESCRIPTION	68V8	68W8				REMARKS
28	92780–06020	.SCREW, FLAT HEAD		4				
29	98780–05018	.SCREW, FLAT HEAD		4				
30	EL8–48244–00	.SPRING, FREE ACCEL.		2				
31	EL8–48245–00	.PLATE, LOCK		2				
32	704–48222–P0	.GRIP, CONTROL LEVER		2				
33	704–82594–00	.CLAMP		1				
34	704–82563–51	.TRIM & TILT SWITCH ASSY		1				
35	704–48229–P1	.GRIP, CONTROL LEVER		1				
36	92990–05300	.WASHER, INTERNAL TOOTH		6				
37	95380–06600	.NUT, HEXAGON		4				
38	701–48248–00	.ROLLER, FREE ACCEL.		2				
39	704–48238–00	.SPRING, DETENT		10				
40	704–48232–P1	.GEAR		2				
41	EL8–48164–00	.PIN 2		2				
42	704–48242–10	.SHAFT, DRIVE		2				
43	6X3–48225–20	.COVER		2				
44	704–48192–00	.WASHER 2		2				
45	97890–06018	.SCREW, PAN HEAD		4				
46	92990–06300	.WASHER, INTERNAL TOOTH		4				
47	EL8–48279–00	.CIRCLIP 2		2				
48	704–48234–00	.BUSHING 1		2				
49	704–48219–P0	.COVER, LEAD		2				
50	704–48144–20	.PLATE, STOPPER 2		2				
51	704–48176–10	.GROMMET		1				
52	704–48192–P0	.WASHER 2		2				
53	704–48233–00	.GEAR 2		2				
54	704–48235–00	.BUSHING		2				

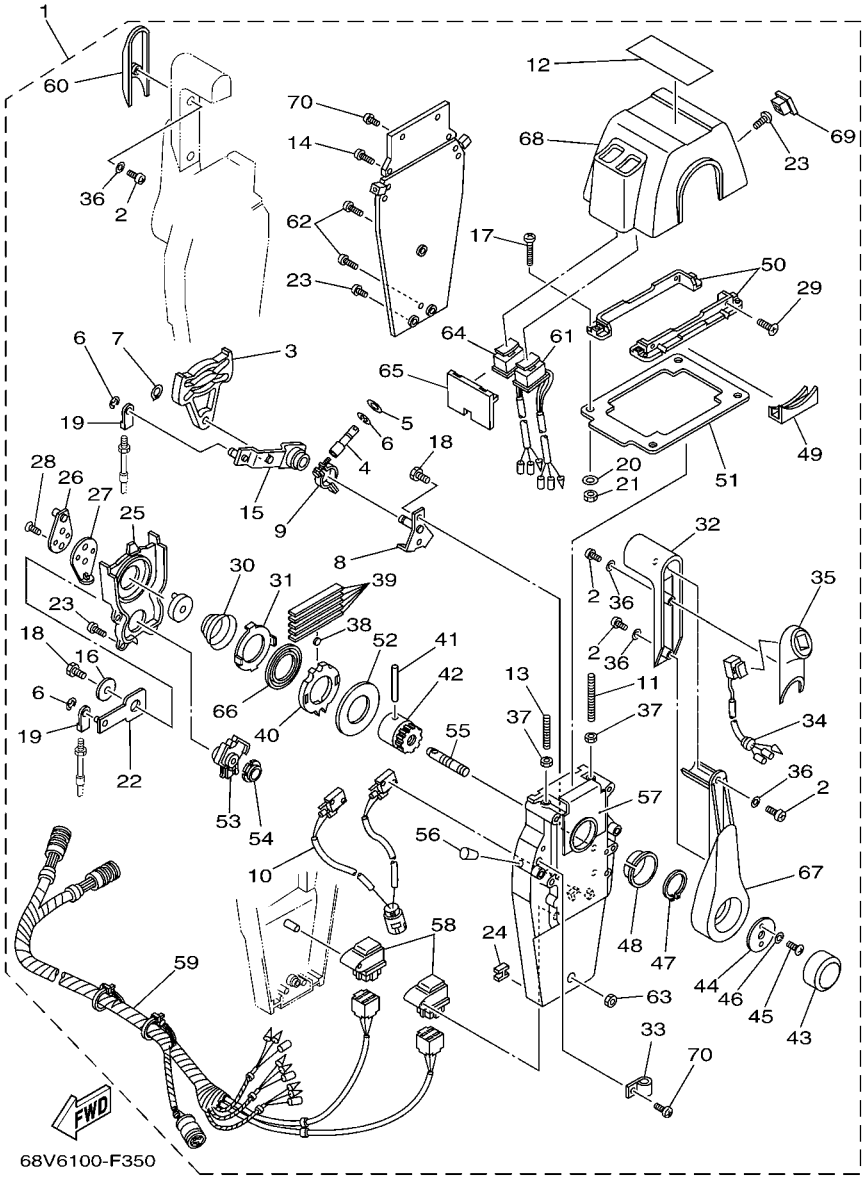

FIG. 35 REMOTE CONTROL ASSY 3

REF. NO.	PART NO.	DESCRIPTION	68V8	68W8				REMARKS
55	704–48153–00	.SHAFT, FREE ACCEL.		2				
56	704–48166–00	.PLUG		2				
57	704–48284–P0	.GROMMET		2				
58	704–81950–10	.RELAY ASSY		2				
59	704–82590–10	.WIRE HARNESS ASSY		1				
60	704–48229–R0	.GRIP, CONTROL LEVER		1				
61	704–82563–H1	.TRIM & TILT SWITCH ASSY		1				
62	704–48128–00	.SCREW 2		3				
63	704–48156–00	.NUT 1		1				
64	704–82563–J1	.TRIM & TILT SWITCH ASSY		1				
65	704–48285–10	.GROMMET 2		1				
66	704–48178–00	.PLATE, SHIFT		2				
67	704–48221–P0	.LEVER, CONTROL		2				
68	704–48119–41	.COVER		1				
69	704–48167–11	.PLUG		1				
70	97890–05016	.SCREW, PAN HEAD		5				

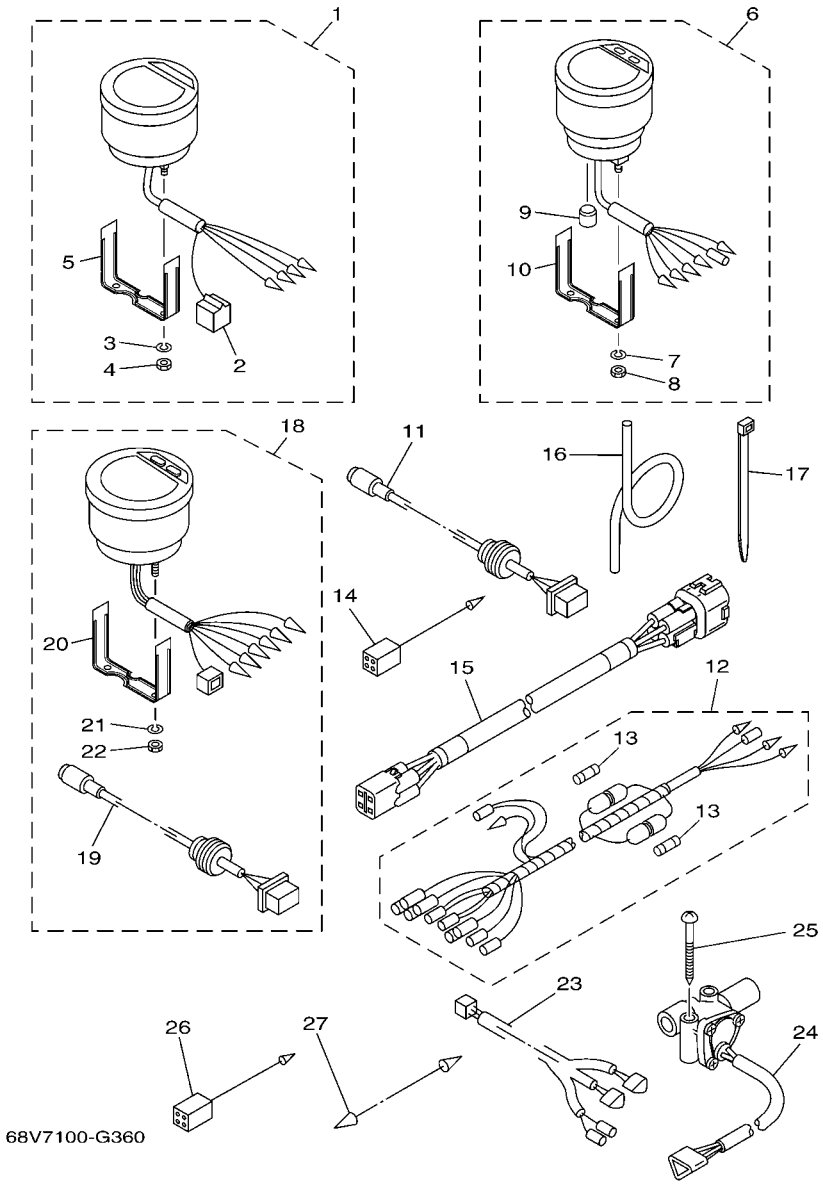

FIG. 36 METER

REF. NO.	PART NO.	DESCRIPTION	68V8	68W8				REMARKS
1	6Y5–8350T–90	DIGITAL TACHOMETER ASSY	1	1				AP FOR BRA
2	9E450–04533	.CONNECTOR	1	1				F-4-W
3	92990–04100	.WASHER, SPRING	2	2				
4	95380–04600	.NUT	2	2				
5	6Y5–8355X–T1	.BRACKET, METER 1	1	1				
6	6Y5–83570–S5	SPEEDOMETER ASSY	1					AP FOR BRA
7	92990–04100	.WASHER, SPRING	2					
8	95380–04600	.NUT	2					
9	6Y5–83533–T2	.GROMMET	1					
10	6Y5–8355X–T1	.BRACKET, METER 1	1					
11	6Y5–87122–S0	CORD ASSY 1	1					AP FOR BRA
12	6Y5–83553–M0	WIRE, LEAD (L=2.5M)	1					AP FOR BRA
	6Y5–83553–00	WIRE, LEAD (L=2.5M)		1				AP FOR BRA
13	1E6–82151–00	.FUSE (10A)	2					FOR 6Y5-83553-M0
	1E6–82151–00	.FUSE (10A)		1				FOR 6Y5-83553-00
14	6Y5–82117–00	WIRE, LEAD (BLACK) (L300)	1					AP FOR BRA
15	6Y5–83653–30	WIRE, LEAD (L=8.0M)	1					AP FOR BRA 4P,8M
	6Y5–83653–40	WIRE, LEAD (L=9.0M)		1				AP FOR BRA 4P,9M
16	6Y5–83557–10	TUBE (8M)	1					AP FOR BRA
17	90465–11M10	CLAMP	2					AP FOR BRA
18	6Y5–8350F–00	FUEL MANAGEMENT METER		1				AP FOR BRA
19	6Y5–87122–S0	.CORD ASSY 1		1				
20	6Y5–8355X–T1	.BRACKET, METER 1		1				
21	92990–04100	.WASHER, SPRING		2				
22	95380–04600	.NUT		2				
23	6Y5–83553–F1	WIRE, LEAD (L=8.0M)		1				AP FOR BRA
24	6Y5–85752–02	SENDER UNIT ASSY, FUEL METER		2				AP FOR BRA

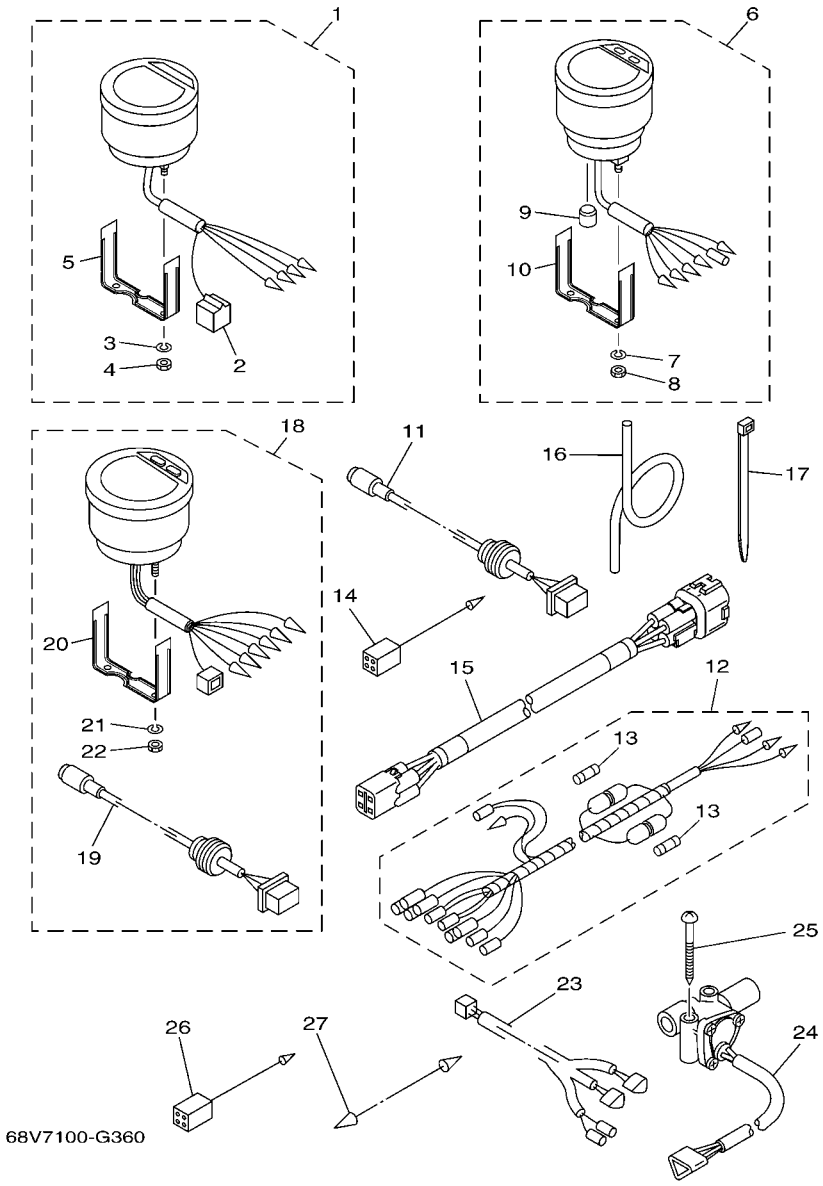

FIG. 36 METER

REF. NO.	PART NO.	DESCRIPTION	68V8	68W8				REMARKS
25	90158–06003	SCREW, WOOD		4				AP FOR BRA
26	6Y5–82117–00	WIRE, LEAD (BLACK) (L300)		1				AP FOR BRA
27	703–82531–00	WIRE, LEAD (L70)		1				AP FOR BRA

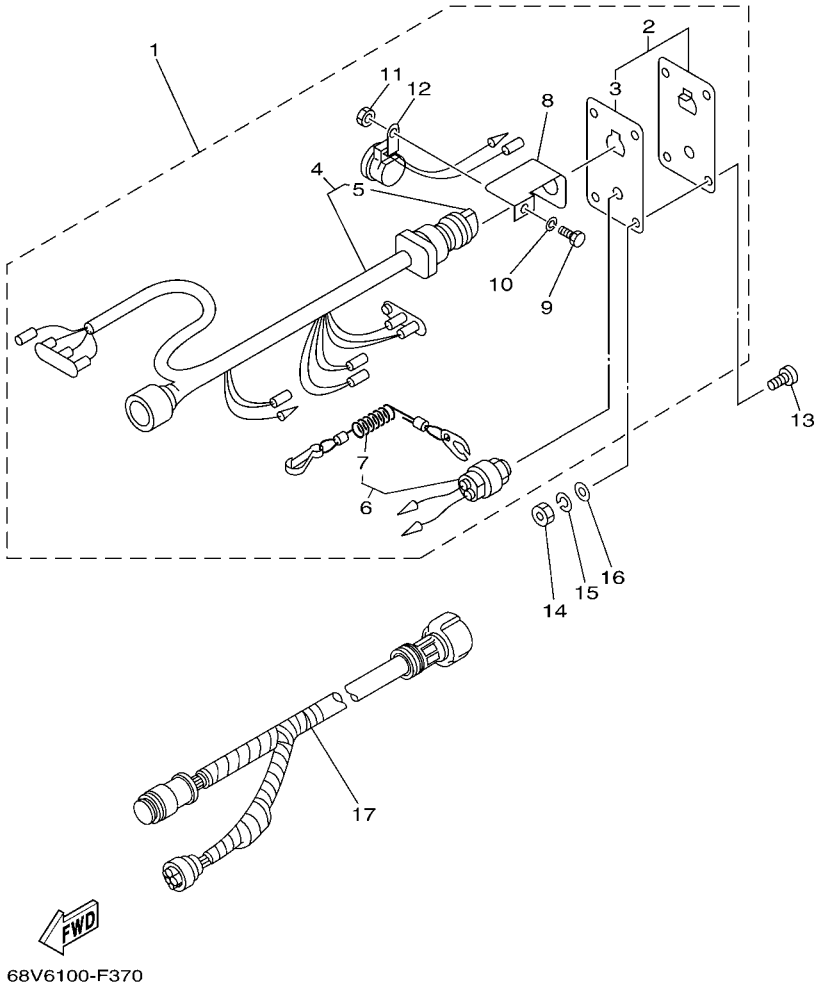

FIG. 37 SWITCH & PANEL 1

REF. NO.	PART NO.	DESCRIPTION	68V8	68W8				REMARKS
1	6R5–82570–05	PANEL SWITCH ASSY	1					AP FOR CAR
2	704–82571–02	.PANEL, SWITCH	1					
3	6R5–82588–01	..PLATE	1					
4	6R5–82510–02	.MAIN SWITCH ASSY	1					
5	676–82577–00	..CAP, KEY	1					
6	688–82575–01	.ENGINE STOP SWITCH ASSY	1					
7	682–82556–00	..LANYARD, STOP SWITCH	1					
8	64D–82581–00	.STAY, CORD CLAMP	1					
9	97303–05012	.BOLT	1					
10	92903–05100	.WASHER, SPRING	1					
11	95303–05700	.NUT	1					
12	6R5–83383–00	.BUZZER	1					
13	90149–05M05	SCREW	4					AP FOR CAR
14	95303–05600	NUT	4					AP FOR CAR
15	92903–05100	WASHER, SPRING	4					AP FOR CAR
16	92903–05600	WASHER, PLATE	4					AP FOR CAR
17	6K1–8258A–40	EXTENSION, WIRE HARNESS (8M)	1					AP FOR CAR (10P)

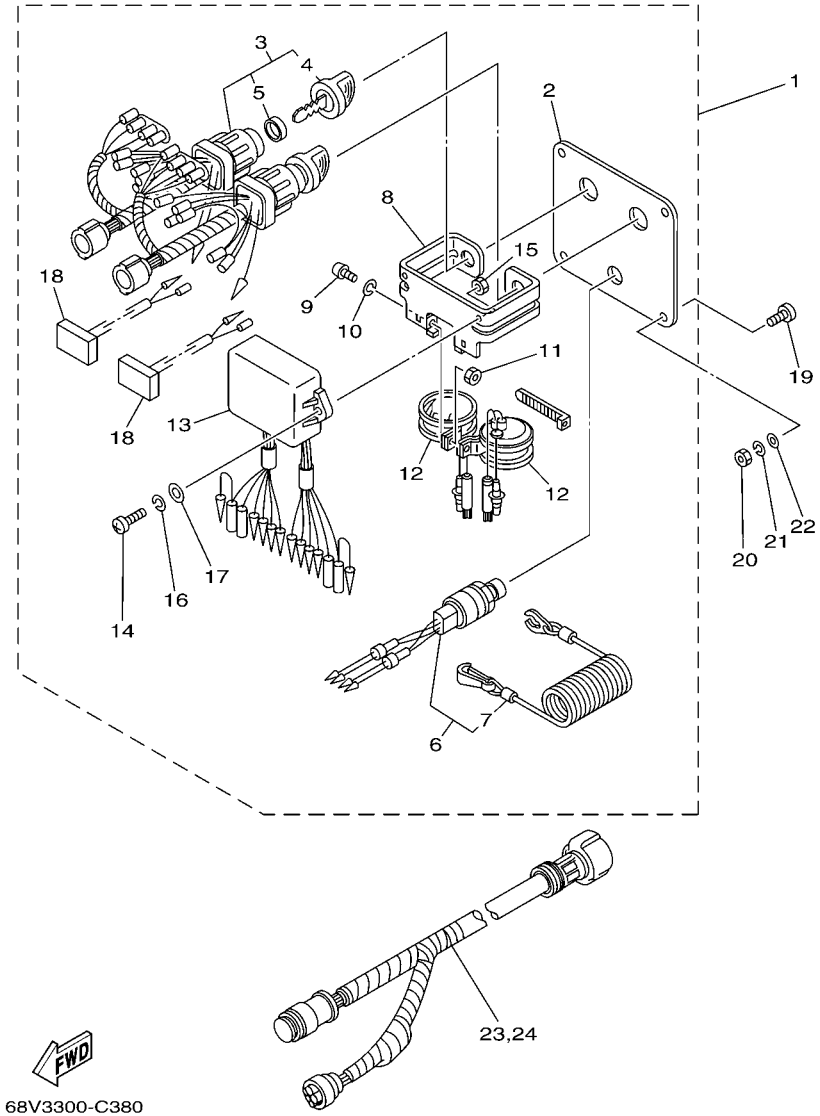

FIG. 38 SWITCH & PANEL 2

REF. NO.	PART NO.	DESCRIPTION	68V8	68W8				REMARKS
1	6K1–82570–08	PANEL SWITCH ASSY		1				AP FOR BRA
2	6K1–82571–02	.PLATE, PANEL SWITCH		1				
3	6K1–82510–06	.MAIN SWITCH ASSY		2				
4	703–82577–00	..CAP, KEY		1				
5	6K1–82532–00	..CAP		1				
6	6K1–82575–00	.ENGINE STOP SWITCH ASSY		1				
7	682–82556–00	..LANYARD, STOP SWITCH		1				
8	6K1–83614–01	.BRACKET		1				
9	98980–05010	.SCREW, BIND		2				
10	92990–05100	.WASHER, SPRING		2				
11	95380–05600	.NUT		2				
12	688–83383–11	.BUZZER		2				
13	6K1–85830–01	.CONTROL UNIT ASSY		1				
14	98980–06020	.SCREW, BIND		2				
15	95380–06600	.NUT, HEXAGON		2				
16	92990–06100	.WASHER, SPRING		2				
17	92990–06600	.WASHER, PLATE		2				
18	6K1–81980–00	.DIODE ASSY		2				
19	90149–05M05	SCREW		4				AP FOR BRA
20	95380–05600	NUT		4				AP FOR BRA
21	92990–05100	WASHER, SPRING		4				AP FOR BRA
22	92990–05600	WASHER, PLATE		4				AP FOR BRA
23	6K1–8258A–40	EXTENSION, WIRE HARNESS (8M)		1				AP FOR BRA (10P)
24	61B–8258A–01	EXTENSION, WIRE HARNESS (9.5M)		1				AP FOR BRA (10P)

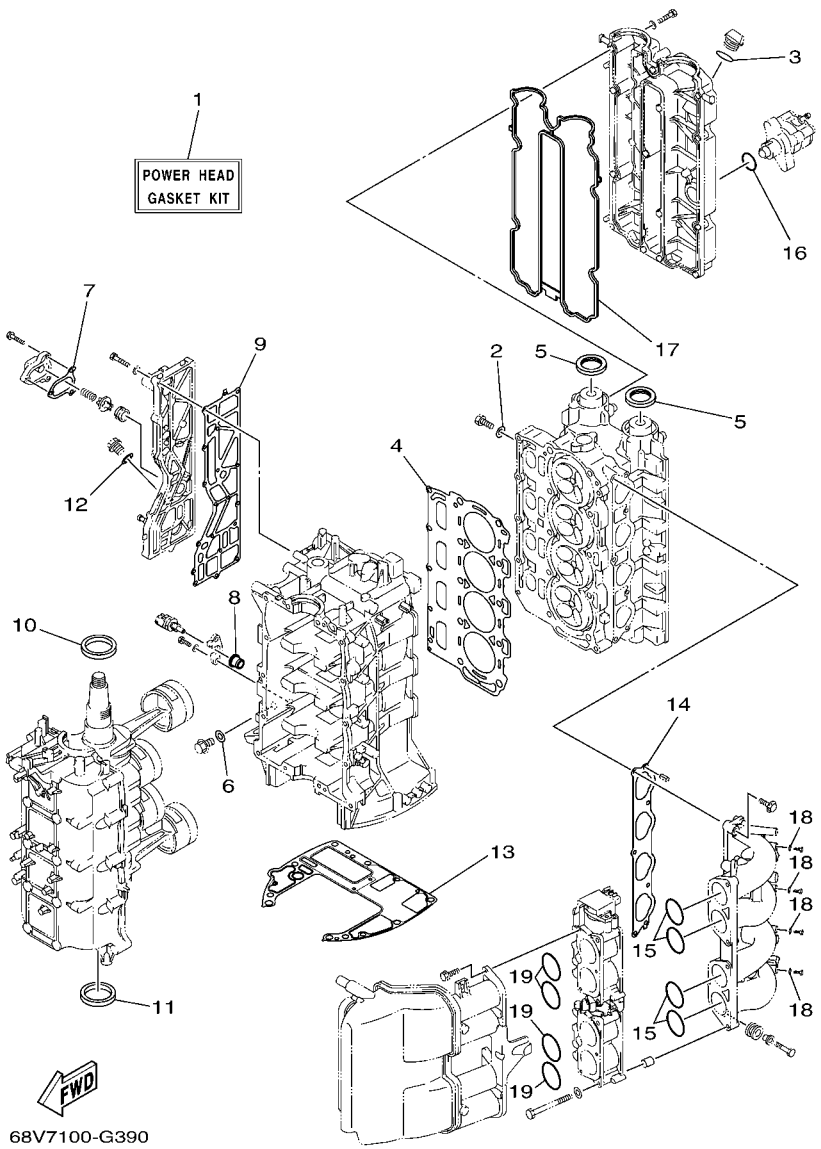

FIG. 39 REPAIR KIT 1

REF. NO.	PART NO.	DESCRIPTION	68V8	68W8				REMARKS
1	68V–W0001–05	POWER HEAD GASKET KIT	1	1				
2	90430–08143	.GASKET	4	4				
3	93210–24M79	.O-RING	1	1				
4	67F–11181–03	.GASKET, CYLINDER HEAD 1	1	1				
5	93102–38M59	.OIL SEAL	2	2				
6	90430–14115	.GASKET	1	1				
7	67F–12435–A0	.GASKET	1	1				
8	68V–85753–00	.GASKET, SENDER UNIT	1	1				
9	67F–41114–A2	.GASKET, EXHAUST OUTER COVER	1	1				
10	93102–48009	.OIL SEAL	1	1				
11	93101–48002	.OIL SEAL	1	1				
12	90430–18130	.GASKET	1	1				
13	68V–11351–00	.GASKET, CYLINDER	1	1				
14	68V–13645–00	.GASKET, MANIFOLD 1	1	1				
15	93210–48MG8	.O-RING	4	4				
16	93210–30682	.O-RING	1	1				
17	6D8–11356–01	.SEAL, CYLINDER 2	1	1				
18	90430–06014	.GASKET	4	4				
19	93210–48MJ9	.O-RING	4	4				

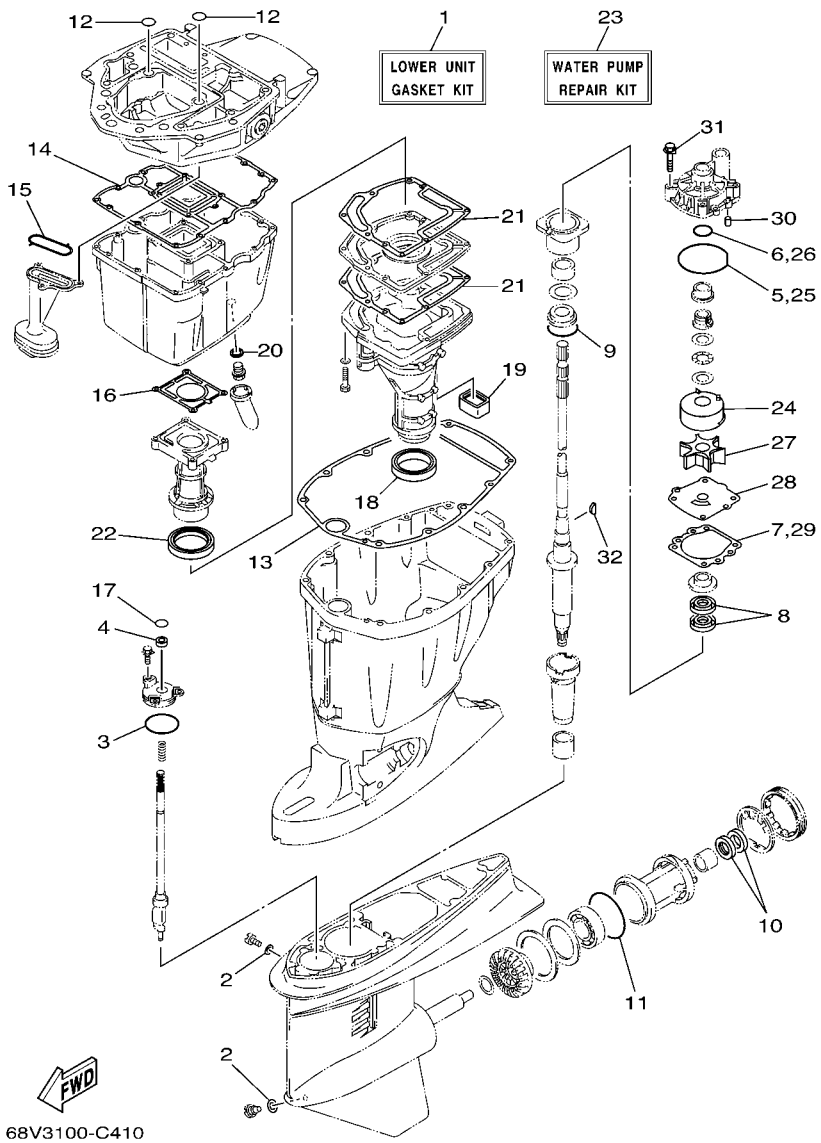

FIG. 40 REPAIR KIT 2

REF. NO.	PART NO.	DESCRIPTION	68V8	68W8				REMARKS
1	68V–W0001–21	LOWER UNIT GASKET KIT	1	1				
2	90430–08020	.GASKET	2	2				
3	93210–58144	.O-RING	1	1				
4	93106–09014	.OIL SEAL	1	1				
5	93210–86M38	.O-RING	1	1				
6	93210–37160	.O-RING	1	1				
7	6E5–44315–A0	.GASKET, WATER PUMP	1	1				
8	93101–28M16	.OIL SEAL	2	2				
9	93210–55M14	.O-RING	1	1				
10	93101–30M17	.OIL SEAL	2	2				
11	93210–86M39	.O-RING	1	1				
12	93210–19MJ1	.O-RING	2	2				
13	67F–45113–00	.GASKET, UPPER CASING	1	1				
14	68V–15312–00	.GASKET, OIL PAN	1	1				
15	67F–13415–00	.SEAL, OIL STRAINER	1	1				
16	67F–41133–A1	.GASKET, EXHAUST MANIFOLD 1	1	1				
17	93210–09165	.O-RING	1	1				
18	68V–45123–00	.GASKET, MUFFLER	1	1				
19	67F–45127–00	.SEAL	1	1				
20	90430–14M09	.GASKET	1	1				
21	67F–41134–A0	.GASKET, EXHAUST MANIFOLD	2	2				
22	67F–41138–00	.SEAL, EXT. 1	1	1				
23	68V–W0078–00	WATER PUMP REPAIR KIT	1	1				
24	61A–44322–02	.INSERT, CARTRIDGE	1	1				
25	93210–86M38	.O-RING	1	1				
26	93210–37160	.O-RING	1	1				
27	6E5–44352–01	.IMPELLER	1	1				

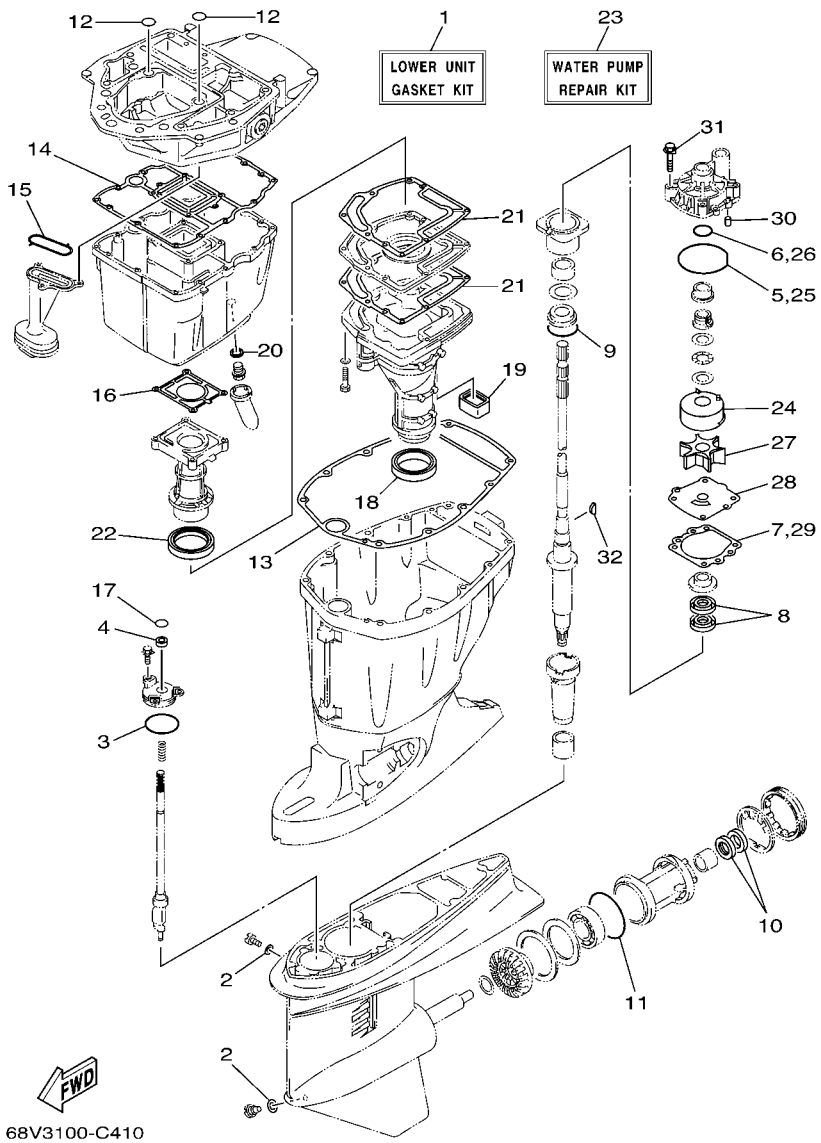

FIG. 40 REPAIR KIT 2

REF. NO.	PART NO.	DESCRIPTION	68V8	68W8				REMARKS
28	68V–44323–00	.OUTER PLATE, CARTRIDGE	1	1				
29	6E5–44315–A0	.GASKET, WATER PUMP	1	1				
30	93606–12019	.PIN, DOWEL	2	2				
31	90119–08M14	.BOLT, WITH WASHER	4	4				
32	90280–04M05	.KEY, WOODRUFF	1	1				

PART NO.	REF. NO.
68V–11110–03–9S	4 – 2
62Y–11119–00	2 – 9
67F–11133–10	4 – 3
67F–11168–00	4 – 22
67F–11181–03	4 – 17
	39 – 4
68V–11191–00–9S	4 – 21
67F–11192–01	4 – 29
67F–11301–10	4 – 8
69J–11301–10	2 – 34
6E5–11325–00	2 – 14
68V–11325–02	2 – 35
	4 – 9
67F–11328–00	2 – 36
	4 – 10
68V–11351–00	2 – 43
	39 – 13
6D8–11356–01	4 – 26
	39 – 17
676–11372–00	2 – 17
68V–11411–00	3 – 1
67F–11416–00	3 – 4
67F–11416–10	3 – 4
67F–11416–20	3 – 4
67F–11417–00	3 – 5
67F–11417–10	3 – 5
67F–11417–20	3 – 5
67F–11417–30	3 – 5
67F–11418–00	3 – 6
67F–11418–10	3 – 6
67F–11418–20	3 – 6
6D8–11536–00	5 – 23
67F–11537–00	5 – 14
67F–11590–00	5 – 18
67F–11595–00	5 – 21
6D8–11603–01	3 – 9
6D8–11604–01	3 – 9
68V–11656–00	3 – 10
68V–11656–10	3 – 10
68V–11656–20	3 – 10
68V–11656–30	3 – 10
68V–12111–00	5 – 1
67F–12114–00	5 – 4
67F–12116–00	5 – 3
67F–12117–00	5 – 5
67F–12118–00	5 – 6
68V–12121–00	5 – 2
67F–12138–40	12 – 23

PART NO.	REF. NO.
67F–12138–50	12 – 23
67F–12138–60	12 – 23
67F–12153–00	5 – 9
68V–12157–00	5 – 15
67F–12168–00	5 – 10
67F–12168–10	5 – 10
67F–12168–20	5 – 10
67F–12168–30	5 – 10
67F–12168–40	5 – 10
67F–12168–50	5 – 10
67F–12168–60	5 – 10
67F–12168–70	5 – 10
67F–12168–80	5 – 10
67F–12168–A0	5 – 10
67F–12168–B0	5 – 10
67F–12168–C0	5 – 10
67F–12168–D0	5 – 10
67F–12168–E0	5 – 10
67F–12168–F0	5 – 10
67F–12168–G0	5 – 10
67F–12168–H0	5 – 10
67F–12168–J0	5 – 10
67F–12168–K0	5 – 10
67F–12168–L0	5 – 10
67F–12168–M0	5 – 10
67F–12168–N0	5 – 10
67F–12168–P0	5 – 10
67F–12168–R0	5 – 10
67F–12168–S0	5 – 10
67F–12168–T0	5 – 10
67F–12168–U0	5 – 10
67F–12168–V0	5 – 10
67F–12168–W0	5 – 10
67F–12168–X0	5 – 10
67F–12168–Y0	5 – 10
67F–12169–00	5 – 10
67F–12169–10	5 – 10
67F–12169–20	5 – 10
67F–12169–30	5 – 10
67F–12169–40	5 – 10
67F–12169–50	5 – 10
67F–12169–60	5 – 10
67F–12169–70	5 – 10
67F–12169–80	5 – 10
67F–12169–A0	5 – 10
67F–12169–B0	5 – 10
67F–12169–C0	5 – 10
67F–12169–D0	5 – 10

PART NO.	REF. NO.
67F–12169–E0	5 – 10
67F–12169–F0	5 – 10
67F–12169–G0	5 – 10
67F–12169–H0	5 – 10
67F–12169–J0	5 – 10
67F–12169–K0	5 – 10
67F–12169–L0	5 – 10
67F–12169–M0	5 – 10
67F–12169–N0	5 – 10
67F–12171–00	5 – 11
67F–12181–00	5 – 12
60V–12411–00	4 – 31
67F–12412–00	4 – 32
68V–12413–00–9S	4 – 33
6G5–12416–00	2 – 28
67F–12435–A0	2 – 32
	39 – 7
67F–1243A–00	2 – 40
67F–1246A–01–9S	2 – 31
67F–12535–01	17 – 31
68T–12572–00	17 – 30
6R3–12581–00	17 – 38
6R3–12582–00	17 – 39
6R3–12583–00	17 – 40
68V–13105–00	7 – 8
67F–13119–01	24 – 19
68V–1312A–00	7 – 10
68V–13131–00	10 – 18
67F–13149–00	24 – 23
68V–13160–00	8 – 1
68V–13160–10	8 – 1
67F–13300–10	24 – 14
67F–13314–02	24 – 15
67F–13329–00	24 – 17
67F–13338–00	24 – 25
67F–13339–00	24 – 24
67F–13411–00	24 – 9
67F–13415–00	24 – 13
	40 – 15
67F–13434–10	1 – 37
68V–13435–00	8 – 6
68V–13437–41	12 – 24
68V–13437–51	12 – 24
68V–13437–61	12 – 24
5GH–13440–00	2 – 48
68V–13473–00	7 – 11
67F–13473–01	24 – 16
67F–13495–00	24 – 18

PART NO.	REF. NO.
68V–13532–01	9 – 26
68V–13533–00	9 – 24
68V–13534–00	9 – 32
68V–13535–00	9 – 36
68V–13542–00	9 – 23
68V–13543–01	9 – 38
68V–13544–00	9 – 25
68V–13545–00	9 – 27
68V–13546–00	9 – 28
68V–13547–01	9 – 33
68V–13573–00	7 – 21
68V–13574–00	7 – 20
68V–13577–00	9 – 19
	9 – 31
68V–13593–00	9 – 21
67F–13631–03	24 – 22
68V–13641–00–94	7 – 25
68V–13645–00	6 – 5
	39 – 14
68V–13716–00	9 – 22
68V–13751–01	7 – 2
68V–13751–11	7 – 2
68V–13752–01	7 – 6
68V–13752–11	7 – 6
68V–13766–00	8 – 4
68V–13766–10	8 – 4
67F–13769–00	24 – 20
68V–13769–00	9 – 4
68V–13769–10	9 – 4
68V–13781–10	9 – 7
68V–13784–00	9 – 9
68V–13906–01	8 – 9
68V–13907–03	9 – 17
68V–13907–11	9 – 17
67F–13914–00	24 – 21
68V–13915–00	9 – 8
68V–13915–10	9 – 8
68V–13971–00	8 – 14
68V–13971–10	8 – 14
68V–13972–00	8 – 15
68V–13972–10	8 – 15
68V–13973–10	9 – 20
68V–1410B–00	8 – 3
68V–14126–00	9 – 15
68V–14180–03	9 – 1
68V–14180–11	9 – 1
68V–14181–00	9 – 3
68V–14181–10	9 – 3

PART NO.	REF. NO.
68V–14182–01	9 – 2
68V–14182–10	9 – 2
68V–14191–00	9 – 14
68V–14200–21	7 – 1
68V–14200–31	7 – 1
68V–14225–00	8 – 5
69J–14225–01	9 – 39
68V–14255–00	9 – 12
68V–14255–10	9 – 12
68V–14264–00	8 – 12
68V–14265–00	8 – 23
68V–14291–00–94	6 – 14
68V–14292–00	6 – 21
68V–14321–00	7 – 4
68V–14323–00	7 – 3
68V–14331–00	7 – 5
	7 – 7
68V–14356–00	8 – 11
68V–14357–00	8 – 21
68V–14386–00	9 – 6
68V–14397–00	8 – 7
68V–14397–10	8 – 7
68V–14419–10	7 – 24
68V–1441J–00	7 – 35
68V–1441L–00	7 – 31
68V–14428–00	8 – 19
68V–14440–00	6 – 16
68V–14446–00	8 – 22
68V–14453–00	7 – 34
68V–14475–00	7 – 23
	8 – 20
68V–14496–00	7 – 19
68V–14511–00	7 – 13
68V–14546–00	9 – 16
68V–14546–10	9 – 16
68V–14565–00	8 – 10
68V–14567–00	9 – 11
68V–14592–00	9 – 13
68V–14592–10	9 – 13
68V–14711–10–5B	23 – 9
68V–14711–30–5B	23 – 9
68V–14777–00	7 – 22
	8 – 18
68V–14807–11	9 – 18
68V–14960–00	7 – 9
68V–14984–00	9 – 10
68V–14984–10	9 – 10
68V–14985–00	9 – 5

PART NO.	REF. NO.
68V–15100–02–9S	2 – 2
67F–15142–00	2 – 13
68V–15311–00–5B	24 – 1
68V–15312–00	24 – 8
	40 – 14
63P–15316–00	24 – 2
6D8–15362–00	24 – 30
6G8–15363–00	4 – 36
67F–15373–00	6 – 6
69J–21841–02	8 – 13
68V–2247A–10	8 – 26
68V–2247B–00	8 – 27
68V–2411M–00	8 – 17
68V–24149–00	10 – 25
6YJ–24167–00	29 – 7
68V–2417H–00	7 – 36
6YK–24201–03	30 – 1
6YJ–24201–10	29 – 1
6YK–24260–01	30 – 4
6Y1–24260–12	29 – 3
6Y1–24268–00	29 – 6
6YL–24268–01	30 – 2
6Y2–24305–06	29 – 13
6YK–24306–44	30 – 7
6Y2–24306–45	29 – 8
6Y2–24307–50	11 – 1
68V–24311–00	10 – 14
68V–24312–00	17 – 41
61A–24316–00	2 – 27
6Y1–24329–00	29 – 5
6YL–24329–00	30 – 6
6E5–24351–51	11 – 3
	29 – 10
6Y2–24360–60	11 – 5
	29 – 12
68V–24374–00	10 – 21
68V–24377–00	9 – 29
6R3–24377–10	10 – 36
688–24378–00	2 – 26
68V–24379–00	9 – 30
68V–24410–00	10 – 15
68V–24411–00	10 – 20
68V–24412–00	10 – 16
68V–24413–00	10 – 22
68V–24414–00	10 – 23
68V–24423–00	10 – 19
68V–24444–00	10 – 24
68V–24454–00	10 – 17

PART NO.	REF. NO.
68V–24460–01	9 – 37
68V–24460–10	9 – 37
6D8–24469–00	10 – 7
67F–24491–00	10 – 33
68V–24495–00	10 – 30
68V–24502–02	9 – 34
68V–24502–12	9 – 34
68V–24519–00	8 – 16
6D8–24519–00	10 – 8
6D8–24560–00	10 – 3
6D8–24562–00	10 – 6
6D8–24563–00	10 – 4
6D8–24564–00	10 – 5
68V–24566–00	10 – 10
67F–24575–00	10 – 29
6YJ–24610–01	29 – 2
6YK–24610–01	30 – 3
68V–2481H–00	8 – 28
	9 – 35
67F–28100–01	10 – 38
67F–2812A–00	14 – 32
6D8–41113–30–9S	2 – 16
67F–41114–A2	2 – 20
	39 – 9
67F–41131–01–5B	23 – 5
67F–41133–A1	23 – 6
	40 – 16
67F–41134–A0	23 – 14
	40 – 21
67F–41137–02–94	23 – 1
67F–41138–00	23 – 16
	40 – 22
68V–41237–00	7 – 28
6H4–41237–00	7 – 29
68V–42154–00	18 – 36
68V–42157–00	18 – 30
68V–42171–00	18 – 31
68V–42510–10–8D	20 – 9
68V–42510–30–8D	20 – 9
68V–42541–00	2 – 22
68V–42610–12–8D	1 – 1
68V–42610–B2–8D	1 – 1
68V–42612–00–8D	1 – 17
68V–42613–00	1 – 15
68V–42615–00	1 – 21
68V–42617–00	1 – 30
68V–42619–00	1 – 31
68V–42628–00	1 – 19

PART NO.	REF. NO.
68V–42632–00	1 – 22
68V–42647–00	1 – 2
67F–42649–00	1 – 11
68V–42651–00	1 – 5
68V–42652–00	1 – 8
67F–42662–00	1 – 14
68V–42677–10	1 – 25
68V–42677–A0	1 – 25
68V–42678–10	1 – 26
68V–42678–B0	1 – 26
68V–42681–10	1 – 28
68V–42682–10	1 – 29
68V–42710–01–8D	17 – 1
648–42715–00	18 – 27
61A–42716–00	17 – 43
67F–42717–00	17 – 25
68V–42718–00	1 – 20
67F–42724–00	23 – 31
68V–42725–00	17 – 19
68V–42725–10	17 – 19
6H1–42726–21	17 – 22
6G1–42727–00	23 – 4
68V–42738–00–5B	17 – 17
67F–42741–01–8D	17 – 44
6H4–42748–00	17 – 24
68F–42753–00	17 – 50
67F–42756–00	17 – 20
67F–42761–01–94	2 – 44
6AH–42794–40	17 – 54
6AH–42794–50	17 – 55
67F–42815–00–8D	17 – 5
67F–42816–00–8D	17 – 6
68V–42818–01	17 – 9
67F–42828–00–5B	17 – 7
68V–43111–01–8D	19 – 1
68V–43112–01–8D	19 – 9
64E–43126–00	19 – 37
64E–43131–01	19 – 15
64E–43139–10	20 – 1
64D–43144–00	17 – 14
66T–43144–00	19 – 27
6E5–43145–01	31 – 8
6G5–43148–00	19 – 32
6G5–43181–02	19 – 29
6G5–43185–02	19 – 30
64E–43311–10–8D	19 – 22
64E–43311–20–8D	19 – 22
63P–43376–00	20 – 6

PART NO.	REF. NO.
68V–43800–03–4D	21 – 1
64E–43802–00	22 – 8
64E–43805–00	22 – 37
64E–4380F–00	22 – 33
64E–4380J–00	22 – 30
64E–43810–01	21 – 6
64E–43811–01	21 – 7
6E5–43814–02	21 – 14
64E–43816–00	22 – 17
64E–43817–00	21 – 5
64E–43817–10	22 – 19
6BC–43818–00	21 – 34
64E–4381G–00	21 – 28
64E–43820–01	21 – 16
64E–43821–01	21 – 17
64E–43822–00	21 – 18
64E–43825–02	21 – 2
64E–43827–00	22 – 22
64E–43828–00	21 – 23
64E–43829–00	21 – 24
64E–4382G–00	21 – 30
68V–43830–00	22 – 4
64E–43831–00	22 – 2
64E–43841–00	22 – 7
64E–43843–00	22 – 6
64E–43843–10	22 – 38
64E–4384J–00	21 – 19
64E–43850–00	22 – 15
66Y–43851–00	22 – 11
68V–43855–00	22 – 14
64E–43858–00	22 – 12
	22 – 18
6E5–43858–00	21 – 29
72X–43858–00	22 – 5
64E–43859–00	22 – 13
64E–43860–00	22 – 20
6E5–43862–00	21 – 11
	21 – 15
6G5–43863–00	22 – 10
6E5–43864–00	21 – 21
6G5–43864–00	21 – 20
64E–43865–00	22 – 16
6G5–43865–00	22 – 35
64E–43866–00	21 – 10
64E–43867–00	21 – 9
64E–43868–00	22 – 3
64E–43869–00	21 – 27
6H1–4386K–10	22 – 29

PART NO.	REF. NO.
6E5–43872–00	21 – 13
64E–43873–00	22 – 24
6E5–43874–01	21 – 22
64E–43875–00	22 – 25
64E–43879–00	22 – 27
64E–43879–10	22 – 26
64E–4387A–00	22 – 23
68V–43880–02	22 – 28
64E–43883–00	21 – 12
64E–4388E–00	21 – 26
64E–4388E–10	22 – 1
64E–4388J–00	21 – 3
64E–43891–00	22 – 31
64E–43892–00	22 – 34
6E5–43896–00	22 – 9
64E–43897–00	21 – 25
64E–43898–00	21 – 8
68V–44117–01	18 – 5
68V–44118–00	18 – 22
68V–44120–10	18 – 17
68V–44120–30	18 – 17
68V–44121–00	18 – 15
68V–44122–01	18 – 12
67F–44135–00	18 – 37
6L6–44150–01	25 – 17
6E5–44150–02	27 – 19
61A–44311–01	25 – 24
	27 – 26
6E5–44312–00	26 – 4
	26 – 21
	28 – 4
	28 – 21
6E5–44315–A0	25 – 31
	27 – 33
	40 – 7
	40 – 29
61A–44322–02	25 – 25
	27 – 27
	40 – 24
68V–44323–00	25 – 30
	27 – 32
	40 – 28
6E5–44352–01	25 – 28
	27 – 30
	40 – 27
68V–44361–11	26 – 2
68V–44361–30	26 – 2
	28 – 2

PART NO.	REF. NO.
6E5–44365–00	26 – 3
	26 – 20
	28 – 3
	28 – 20
6E5–44366–00	26 – 1
	28 – 1
6H3–44391–01	1 – 32
	17 – 23
67F–44514–00–94	20 – 27
67F–44526–00	20 – 30
6G5–44526–00	19 – 3
67F–44533–00	20 – 32
68F–44533–01	2 – 47
68V–44551–00–8D	20 – 14
68V–44553–00–8D	20 – 24
61A–44555–01–94	20 – 17
61A–44575–00	20 – 16
68V–44581–01	2 – 4
68V–45111–11–8D	23 – 18
68V–45111–31–8D	23 – 18
67F–45113–00	23 – 27
	40 – 13
663–45119–00	19 – 14
	19 – 25
68V–45123–00	23 – 10
	40 – 18
67F–45127–00	23 – 17
	40 – 19
67F–45151–00	23 – 23
6C5–45155–00	23 – 26
67F–45181–00–5B	23 – 15
688–45214–02	26 – 11
	28 – 11
688–45215–02	26 – 12
	28 – 12
6G5–45251–02	19 – 2
68V–45300–12–8D	25 – 1
68V–45300–32–8D	25 – 1
68W–45300–32–8D	27 – 1
6E5–45301–05–8D	25 – 2
	27 – 2
6E5–45318–00	23 – 21
6E5–45321–00	25 – 13
	27 – 15
6E5–45331–00–94	25 – 34
	27 – 36
6E5–45332–00–94	25 – 58
6L6–45332–00–94	27 – 61

PART NO.	REF. NO.
688–45341–10	25 – 7
	27 – 9
6E5–45344–00	25 – 40
	27 – 42
6L6–45371–00	28 – 15
6E5–45371–01	26 – 15
688–45375–00	26 – 10
	28 – 10
663–45376–00–94	26 – 9
	28 – 9
6E5–45378–00	25 – 10
	27 – 12
688–45383–02	25 – 68
	27 – 72
688–45384–00	25 – 69
	27 – 73
68V–45501–10	25 – 43
68V–45501–30	25 – 43
	27 – 45
61A–45527–00	25 – 23
	27 – 25
6E5–45536–00	25 – 9
	27 – 11
61A–45538–00	25 – 20
	27 – 22
6L6–45538–00	27 – 6
68V–45551–00	25 – 44
	27 – 46
68V–45560–00	25 – 46
68W–45560–00	27 – 48
6E5–45567–01	25 – 5
	27 – 7
6E5–45567–10	25 – 5
	27 – 7
6E5–45567–20	25 – 5
	27 – 7
6E5–45567–30	25 – 5
	27 – 7
6E5–45567–40	25 – 5
	27 – 7
6E5–45567–50	25 – 5
	27 – 7
6E5–45567–60	25 – 5
	27 – 7
68W–45570–10	27 – 63
68V–45571–00	25 – 60
6E5–45576–00	25 – 61
6L6–45576–00	27 – 64

PART NO.	REF. NO.
6L6–45577–00	25 – 65
	27 – 70
6L6–45577–10	25 – 65
	27 – 70
6L6–45577–20	25 – 65
	27 – 70
6L6–45577–30	25 – 65
	27 – 70
6L6–45577–40	25 – 65
	27 – 70
6L6–45577–50	25 – 65
	27 – 70
6L6–45577–60	25 – 65
	27 – 70
6K1–45578–01	27 – 66
6K1–45578–10	27 – 66
6K1–45578–20	27 – 66
6K1–45578–30	27 – 66
6K1–45578–40	27 – 66
6K1–45578–50	27 – 66
6K1–45578–60	27 – 66
6E5–45587–01	25 – 37
	27 – 39
6E5–45587–10	25 – 37
	27 – 39
6E5–45587–20	25 – 37
	27 – 39
6E5–45587–30	25 – 37
	27 – 39
6E5–45587–40	25 – 37
	27 – 39
6E5–45587–50	25 – 37
	27 – 39
6E5–45587–60	25 – 37
	27 – 39
68W–45611–00	27 – 51
6E5–45611–01	25 – 48
68V–45631–01	25 – 56
	27 – 59
6E5–45633–01	25 – 57
	27 – 60
6E5–45634–01	25 – 50
	27 – 53
6K1–45641–01	25 – 49
6E5–45641–03	27 – 52
6L6–45930–01–98	28 – 27
688–45930–02–98	26 – 27
688–45932–60–98	26 – 27
6E5–45941–00–EL	26 – 27
6E5–45943–00–EL	26 – 27
6E5–45945–01–EL	26 – 27
6E5–45947–00–EL	26 – 27
6E5–45949–00–EL	26 – 27
6E5–45952–00–EL	26 – 27
6E5–45954–00–EL	26 – 27
6E5–45956–00–EL	26 – 27
6L6–45970–00–98	28 – 27
688–45970–03–98	26 – 27
62A–45970–10	26 – 27
6L6–45972–00–98	28 – 27
688–45972–02–98	26 – 27
62A–45972–10	26 – 27
688–45974–02–98	26 – 27
62A–45974–10	26 – 27
688–45976–01–98	26 – 27
688–45978–60–98	26 – 27
63P–45987–00	26 – 22
	28 – 22
688–45997–01	26 – 23
	28 – 23
67F–46241–00	5 – 17
704–48119–31	34 – 59
704–48119–41	35 – 68
EL8–48127–00	34 – 23
	35 – 23
704–48128–00	34 – 2
	35 – 2
	35 – 62
704–48144–10	34 – 50
704–48144–20	35 – 50
703–48152–00	33 – 57
703–48153–00	33 – 3
704–48153–00	34 – 55
	35 – 55
704–48156–00	35 – 63
EL8–48164–00	34 – 41
	35 – 41
704–48166–00	34 – 56
	35 – 56
704–48167–01	34 – 61
704–48167–11	35 – 69
704–48176–00	34 – 51
704–48176–10	35 – 51
704–48178–00	35 – 66
704–48178–10	34 – 60
703–48189–00	33 – 17
EL8–48191–00	34 – 16
	35 – 16
704–48192–00	34 – 44
	35 – 44
704–48192–P0	34 – 52
	35 – 52
703–48198–00	33 – 14
703–48205–17	32 – 1
	33 – 1
704–48205–P1	32 – 2
	34 – 1
703–48207–17	32 – 1
	33 – 1
704–48207–P1	32 – 3
	35 – 1
703–48211–01	33 – 61
703–48212–00	33 – 58
703–48213–00	33 – 59
703–48215–00	33 – 43
704–48215–20	34 – 12
704–48215–30	35 – 12
703–48219–00	33 – 30
704–48219–P0	34 – 49
	35 – 49
703–48221–00	33 – 56
704–48221–P0	34 – 58
	35 – 67
703–48222–00	33 – 27
704–48222–P0	34 – 32
	35 – 32
703–48223–00	33 – 28
703–48225–00	33 – 29
6X3–48225–20	34 – 43
	35 – 43
703–48226–00	33 – 26
703–48227–00	33 – 24
704–48229–P1	34 – 35
	35 – 35
704–48229–R0	35 – 60
704–48231–00	34 – 25
	35 – 25
703–48232–00	33 – 62
704–48232–P1	34 – 40
	35 – 40
704–48233–00	34 – 53
	35 – 53
703–48234–00	33 – 18
704–48234–00	34 – 48
704–48234–00	35 – 48
703–48235–00	33 – 4
704–48235–00	34 – 54
	35 – 54
703–48236–00	33 – 16
703–48238–00	33 – 22
704–48238–00	34 – 39
	35 – 39
EL8–48241–00	34 – 26
	35 – 26
704–48242–10	34 – 42
	35 – 42
703–48243–00	33 – 15
703–48244–00	33 – 21
EL8–48244–00	34 – 30
	35 – 30
703–48245–00	33 – 11
EL8–48245–00	34 – 31
	35 – 31
701–48246–00	34 – 5
	35 – 5
703–48246–00	33 – 23
701–48248–00	33 – 13
	34 – 38
	35 – 38
EL8–48251–00	34 – 3
	35 – 3
703–48252–00	33 – 12
EL8–48254–00	34 – 27
	35 – 27
EL8–48259–00	34 – 7
	35 – 7
704–48261–00	34 – 15
	35 – 15
703–48261–01	33 – 2
704–48262–00	34 – 8
	35 – 8
703–48264–00	33 – 6
704–48264–00	34 – 9
	35 – 9
703–48265–00	33 – 9
704–48265–00	34 – 4
	35 – 4
703–48268–00	33 – 5
703–48271–00	33 – 60
704–48271–00	34 – 22
	35 – 22
EL8–48279–00	34 – 47
EL8–48279–00	35 – 47
703–48281–00	33 – 31
704–48281–00	34 – 13
	35 – 13
EL8–48281–00	34 – 11
	35 – 11
703–48282–00	33 – 32
704–48283–00	34 – 17
	35 – 17
703–48284–00	33 – 52
703–48284–10	33 – 52
704–48284–P0	34 – 57
	35 – 57
704–48285–10	35 – 65
701–48287–00	33 – 42
704–48287–00	34 – 20
	35 – 20
703–48291–10	33 – 39
703–48293–10	33 – 41
701–48320–50	32 – 4
701–48320–60	32 – 4
701–48320–80	32 – 4
663–48344–00	18 – 3
	18 – 28
703–48345–01	33 – 19
	34 – 19
	35 – 19
701–48350–00	32 – 4
701–48350–20	32 – 4
703–48358–00	33 – 20
	34 – 24
	35 – 24
68V–48511–00–8D	20 – 34
67F–48538–00	18 – 1
6E5–61301–01	31 – 10
6E5–61303–00	31 – 14
6E5–61311–11	31 – 12
6E5–61313–00	31 – 11
6E5–61315–00	31 – 13
6E5–61350–02	31 – 1
6E5–61351–01	31 – 2
6E5–61355–00	31 – 5
68V–81145–01	7 – 14
	7 – 32
68V–81146–01	7 – 12
68V–81147–00	7 – 18
	8 – 8
68V–81315–00	15 – 23
445–81328–20	12 – 7
67F–8132G–01	15 – 1
6D8–81332–00	12 – 16
67F–81337–01	12 – 19
63D–81345–20	12 – 5
68V–81410–00	12 – 4
68V–81450–00	12 – 1
68V–81460–00	12 – 2
6D8–81518–00	14 – 33
6D8–81528–00	15 – 4
68V–81673–00	12 – 8
68V–81800–01	16 – 1
67F–81801–00	16 – 5
67F–81807–00	16 – 10
67F–81808–00	16 – 8
67F–81809–00	16 – 19
67F–81810–00	16 – 3
67F–81813–00	16 – 6
68F–81820–00	16 – 7
67F–81821–00	16 – 13
6K7–81826–11	16 – 24
67F–81828–00	16 – 25
68V–8182L–00	7 – 16
67F–81830–00	16 – 17
67F–81832–00	16 – 11
67F–81836–00	16 – 12
67F–81839–00	16 – 21
67F–8183R–00	16 – 16
60V–8183T–00	16 – 18
68F–81840–00	16 – 4
67F–81841–00	16 – 14
67F–81842–00	16 – 20
67F–81846–00	16 – 26
67F–81850–00	16 – 2
67F–81857–00	16 – 9
67F–81869–00	16 – 23
67F–81891–00	16 – 15
68V–81919–00	14 – 53
68V–81919–10	14 – 54
60V–81925–00	16 – 28
68V–81941–01	16 – 22
68V–81942–03	14 – 31
68V–81948–02	14 – 23
68V–81949–00	14 – 15
68V–8194A–00	14 – 7
68V–81950–00	14 – 5
704–81950–10	35 – 58
68V–81953–00	14 – 8

PART NO.	REF. NO.
68V–8195B–01	14 – 14
6D3–81960–00	13 – 14
6K1–81980–00	38 – 18
6AH–81994–40	12 – 27
6AH–81994–50	12 – 28
6AH–81995–40	12 – 25
6AH–81995–50	12 – 26
6AG–81996–00	12 – 29
68V–82105–00	14 – 1
	14 – 56
6Y5–82117–00	36 – 14
	36 – 26
6G5–82119–00	14 – 13
682–82119–01	14 – 17
6E5–82148–00	19 – 6
	19 – 10
66K–82149–00	19 – 26
68V–82149–30	19 – 26
1E6–82151–00	36 – 13
	36 – 13
67F–82151–00	14 – 35
67F–82151–10	14 – 36
67F–8215B–10	14 – 39
67F–8215B–20	14 – 40
68V–82310–00	13 – 5
68V–82310–10	13 – 6
68V–82317–00	13 – 2
6A0–82317–00	14 – 24
67F–82361–00	13 – 12
67F–82362–00	13 – 13
68V–82377–00	17 – 53
63V–82377–50	19 – 40
68V–82380–00	7 – 17
68V–82388–00	13 – 10
68V–82504–00	15 – 22
6R5–82510–02	37 – 4
6K1–82510–06	38 – 3
703–82510–43	33 – 44
6D8–8252H–00	15 – 28
703–82531–00	33 – 46
	36 – 27
68V–82532–00	14 – 16
6K1–82532–00	38 – 5
703–82540–00	33 – 50
704–82540–20	34 – 10
704–82540–30	35 – 10
6D8–82544–00	6 – 9
682–82556–00	33 – 48

PART NO.	REF. NO.
682–82556–00	37 – 7
	38 – 7
703–82563–02	33 – 55
63D–82563–10	15 – 24
703–82563–12	33 – 55
704–82563–41	34 – 34
704–82563–51	35 – 34
704–82563–H1	35 – 61
704–82563–J1	35 – 64
6R5–82570–05	37 – 1
6K1–82570–08	38 – 1
6K1–82571–02	38 – 2
704–82571–02	37 – 2
6K1–82575–00	38 – 6
688–82575–01	33 – 47
	37 – 6
676–82577–00	37 – 5
703–82577–00	33 – 45
	38 – 4
64D–82581–00	37 – 8
6D8–82581–00	14 – 47
68F–82582–00	16 – 29
6P2–82582–00	14 – 41
68V–82582–10	14 – 55
6P2–82582–10	14 – 42
6E5–82587–00	15 – 25
6E5–82588–00	17 – 26
61A–82588–01	18 – 7
6R5–82588–01	37 – 3
68V–82588–10	15 – 8
61B–8258A–01	38 – 24
688–8258A–20	33 – 49
6K1–8258A–40	37 – 17
	38 – 23
704–82590–10	35 – 59
68V–82590–50	14 – 34
703–82591–00	33 – 53
	33 – 53
703–82592–00	33 – 54
68V–82594–00	14 – 27
703–82594–00	33 – 25
704–82594–00	34 – 33
	35 – 33
60V–8259F–00	18 – 6
68V–8259N–00	7 – 33
6R5–83383–00	37 – 12
703–83383–02	33 – 51
688–83383–11	38 – 12

PART NO.	REF. NO.
6Y5–8350F–00	36 – 18
6Y5–8350T–90	36 – 1
6Y5–83533–T2	36 – 9
6Y5–83553–00	36 – 12
6Y5–83553–F1	36 – 23
6Y5–83553–M0	36 – 12
6Y5–83557–10	36 – 16
6E5–83558–00	26 – 18
	28 – 18
6E5–83558–10	25 – 12
	27 – 14
6Y5–8355X–T1	36 – 5
	36 – 10
	36 – 20
6Y5–83570–S5	36 – 6
67F–83614–00	15 – 26
6K1–83614–01	38 – 8
68V–83626–00	4 – 38
67F–83627–01	16 – 34
6Y5–83653–30	36 – 15
6Y5–83653–40	36 – 15
67H–83672–00	20 – 3
72X–85075–L0	22 – 21
689–85547–00	10 – 1
68V–85548–00	14 – 29
68V–85580–00	12 – 3
6Y5–85752–02	36 – 24
68V–85753–00	15 – 16
	39 – 8
67F–85757–00	15 – 15
67F–85790–00	15 – 14
6K1–85830–01	38 – 13
68V–85885–00	7 – 15
65L–85886–00	6 – 20
68V–8591A–42	13 – 1
68V–8591A–51	13 – 1
68V–8591A–61	13 – 1
6Y5–87122–S0	36 – 11
	36 – 19
68V–8A360–00	8 – 2
68V–8A360–10	8 – 2
K1C–A3275–00	3 – 8
K0A–A3721–00	5 – 7
K0A–A3722–00	5 – 8
68V–W0001–05	39 – 1
68V–W0001–21	40 – 1
68V–W0070–10	1 – 27
68V–W0078–00	40 – 23

PART NO.	REF. NO.
68V–W009A–05–9S	4 – 1
68V–W009B–08–9S	2 – 1
68V–W1164–01	3 – 7
68V–W1164–11	3 – 7
90101–09M70	31 – 18
90101–12M03	19 – 41
90101–12M05	19 – 41
90101–12M77	19 – 41
90105–06M07	2 – 37
	4 – 11
90105–10M00	26 – 16
	28 – 16
90105–10M89	4 – 19
90109–06M80	17 – 15
	17 – 29
	17 – 47
90109–06M81	17 – 27
90109–06M82	17 – 8
	17 – 18
90109–06M86	15 – 27
	17 – 21
	17 – 37
	18 – 2
90109–12007	20 – 29
90109–14007	20 – 21
90116–10175	20 – 35
90119–06M10	25 – 16
	27 – 18
90119–06M49	6 – 15
90119–06M59	13 – 4
	14 – 26
90119–06M82	6 – 18
90119–06M83	10 – 28
90119–06M92	12 – 22
90119–06MA2	2 – 33
90119–06MA4	2 – 21
90119–06ME1	6 – 19
90119–07234	4 – 7
90119–07235	4 – 5
	10 – 34
90119–08091	20 – 28
90119–08M14	25 – 33
	27 – 35
	40 – 31
90119–08M22	17 – 2
90119–08M58	23 – 30
90119–08M66	2 – 6
90119–08M68	6 – 2

PART NO.	REF. NO.
90119–08M91	4 – 20
90119–10M08	23 – 19
90119–10M72	5 – 22
90119–10M88	2 – 5
90119–10M89	26 – 8
	28 – 8
90149–05M05	37 – 13
	38 – 19
90152–05M07	26 – 13
	28 – 13
90157–05M16	30 – 5
90157–05M19	29 – 4
90158–06003	36 – 25
90159–05059	20 – 2
90159–06M28	17 – 46
90159–06M29	4 – 30
90167–06002	17 – 32
90170–09M05	31 – 19
90170–14M06	31 – 15
90170–16M01	25 – 45
	27 – 47
90170–40008	5 – 24
90171–18M04	26 – 25
	28 – 25
90179–06M28	1 – 18
	18 – 35
90179–08003	16 – 27
90179–24002	12 – 15
90185–05002	26 – 14
	28 – 14
90185–09M01	31 – 6
	31 – 20
90185–10051	20 – 36
90185–12M12	20 – 33
90185–22M11	19 – 20
90201–06068	17 – 12
90201–06M31	18 – 44
90201–08M12	10 – 32
90201–09M02	18 – 20
90201–10060	21 – 31
90201–10M02	18 – 32
	18 – 42
90201–10M20	31 – 7
90201–10M76	31 – 17
90201–12M05	19 – 43
90201–12M09	20 – 31
90201–13M01	19 – 42
90201–15M58	20 – 20

PART NO.	REF. NO.
90201–16M55	20 – 19
90201–22M01	25 – 21
	27 – 23
90201–24014	12 – 14
90201–26M00	27 – 50
90201–26M59	19 – 19
90201–30M92	25 – 66
90201–38M60	20 – 10
90202–07M07	18 – 13
90202–32M19	20 – 18
90202–40M47	20 – 13
90206–10M04	18 – 33
	18 – 43
90206–15M18	17 – 11
90206–22M19	25 – 22
	27 – 24
90249–06M19	19 – 33
90250–08M07	25 – 55
	27 – 58
90280–04008	5 – 25
90280–04M05	25 – 29
	27 – 31
	40 – 32
90280–04M08	12 – 13
90282–04010	25 – 67
	27 – 71
90340–08002	25 – 6
	27 – 8
90340–14M06	2 – 7
	24 – 3
90340–18M09	2 – 18
90344–51019	4 – 4
90386–06M12	18 – 16
90386–10M16	19 – 31
90386–15M73	17 – 10
90386–22M98	19 – 38
	21 – 35
90386–25M31	19 – 18
90386–38M32	20 – 12
90386–90M90	18 – 19
90387–06119	13 – 3
	14 – 25
90387–06M21	18 – 34
	18 – 38
90387–06M43	17 – 49
90387–06M64	24 – 12
90387–06M71	12 – 20
90387–08M32	6 – 3

PART NO.	REF. NO.
90387–08M37	17 – 4
90387–10M05	19 – 34
90387–10M08	4 – 18
90387–10M61	31 – 3
90401–20007	2 – 49
90430–06014	8 – 25
	39 – 18
90430–06M03	2 – 38
	4 – 12
90430–08020	25 – 8
	27 – 10
	40 – 2
90430–08143	4 – 16
	39 – 2
90430–14115	2 – 8
	39 – 6
90430–14M09	24 – 4
	40 – 20
90430–18130	2 – 19
	39 – 12
90445–076K2	26 – 17
	28 – 17
90445–07ME8	25 – 11
90445–07ME9	25 – 11
	27 – 13
90445–10M18	1 – 33
90445–13M01	11 – 2
	29 – 9
90445–13M35	29 – 11
90445–13M37	10 – 2
90445–15M03	5 – 20
90447–07007	14 – 38
90447–10003	14 – 37
90462–06018	17 – 33
90464–06001	13 – 11
90464–10010	2 – 25
90464–12M58	14 – 28
90464–16001	2 – 50
90464–18004	2 – 24
	17 – 52
90464–20258	17 – 51
90465–06M86	15 – 19
90465–08M23	17 – 28
90465–08M63	1 – 34
	19 – 23
90465–11M10	2 – 23
	2 – 41
	6 – 7

PART NO.	REF. NO.
90465–11M10	8 – 29
	10 – 9
	10 – 26
	10 – 37
	17 – 42
	19 – 21
	20 – 5
	26 – 19
	28 – 19
	36 – 17
90465–11M52	14 – 50
90465–12M03	6 – 11
90465–13M18	6 – 24
	14 – 46
	14 – 51
	14 – 52
90467–20M15	2 – 42
	6 – 8
90468–18008	18 – 4
	18 – 14
	18 – 29
90480–06M19	11 – 4
90480–12072	2 – 12
	4 – 25
90480–13M24	15 – 5
	17 – 48
90480–15M31	12 – 21
90480–20M05	2 – 30
90480–22M15	17 – 3
90501–11M10	25 – 19
	27 – 21
90501–12082	18 – 26
90501–16M11	2 – 29
90501–16M37	25 – 51
	27 – 54
90506–14M24	19 – 36
90506–16M34	17 – 16
90506–16M39	5 – 19
90560–12M01	31 – 4
91490–20015	18 – 21
91490–40030	26 – 26
	28 – 26
91609–25014	10 – 31
91690–30020	19 – 35
91690–50014	6 – 4
91809–08006	4 – 6
	10 – 35
92780–06020	34 – 28

PART NO.	REF. NO.
92780–06020	35 – 28
92903–05100	37 – 10
	37 – 15
92903–05600	37 – 16
92903–06100	14 – 3
	14 – 58
92903–06600	14 – 4
	14 – 22
	14 – 59
92903–08100	16 – 33
	16 – 36
92903–08600	16 – 31
92907–04600	4 – 24
92907–06600	24 – 11
92990–04100	36 – 3
	36 – 7
	36 – 21
92990–05100	38 – 10
	38 – 21
92990–05200	1 – 23
	1 – 36
92990–05300	34 – 36
	35 – 36
92990–05600	38 – 22
92990–06100	1 – 3
	1 – 12
	38 – 16
92990–06300	34 – 46
	35 – 46
92990–06600	23 – 25
	38 – 17
92990–08600	33 – 34
92990–18200	26 – 24
	28 – 24
92995–04100	18 – 9
92995–06100	12 – 11
	13 – 8
	13 – 16
	13 – 19
	14 – 11
	14 – 19
	14 – 44
	15 – 12
	17 – 35
	18 – 40
	19 – 5
92995–06200	17 – 36
92995–06600	1 – 7

PART NO.	REF. NO.
92995–06600	1 – 10
	2 – 11
	2 – 46
	4 – 28
	4 – 35
	6 – 13
	10 – 13
	12 – 12
	12 – 18
	13 – 9
	13 – 17
	13 – 20
	14 – 12
	14 – 20
	14 – 45
	14 – 49
	15 – 3
	15 – 7
	15 – 10
	15 – 13
	15 – 18
	15 – 21
	15 – 30
	18 – 11
	18 – 24
	18 – 41
	19 – 8
	19 – 12
	23 – 8
	23 – 12
	23 – 29
	24 – 6
	24 – 27
92995–08100	19 – 17
92995–08600	4 – 14
	6 – 23
	25 – 42
	27 – 44
92995–10100	20 – 26
	26 – 7
	28 – 7
92995–10600	20 – 8
	21 – 33
92995–14600	20 – 23
93101–28M16	25 – 35
	27 – 37
	40 – 8
93101–30M17	25 – 63

PART NO.	REF. NO.
93101–30M17	27 – 68
	40 – 10
93101–48002	3 – 3
	39 – 11
93102–08M43	22 – 36
93102–38M59	5 – 16
	39 – 5
93102–48009	3 – 2
	39 – 10
93106–09014	25 – 15
	27 – 17
	40 – 4
93210–08287	29 – 14
93210–09165	18 – 18
	40 – 17
93210–10M74	21 – 4
93210–16275	31 – 9
93210–19MJ1	24 – 29
	40 – 12
93210–24M79	4 – 37
	39 – 3
93210–30682	10 – 27
	39 – 16
93210–37160	25 – 27
	27 – 29
	40 – 6
	40 – 26
93210–37MH7	20 – 11
93210–48MG8	7 – 27
	39 – 15
93210–48MJ9	6 – 17
	39 – 19
93210–55M14	25 – 39
	27 – 41
	40 – 9
93210–58144	25 – 14
	27 – 16
	40 – 3
93210–86M38	25 – 26
	27 – 28
	40 – 5
	40 – 25
93210–86M39	25 – 64
	27 – 69
	40 – 11
93306–208U0	25 – 59
93315–345W0	27 – 4
93315–425U7	25 – 47

PART NO.	REF. NO.
93315–425U7	27 – 49
93315–43061	27 – 67
93315–430U8	25 – 62
93315–628U9	25 – 3
	27 – 3
93317–330U2	25 – 36
	27 – 38
93332–000U7	25 – 4
93332–000V7	27 – 62
93341–360U8	27 – 5
93341–440U5	27 – 65
93341–930V2	25 – 38
	27 – 40
93410–22M11	19 – 39
93410–37M04	20 – 15
93420–36M01	23 – 22
93430–06024	33 – 10
	34 – 6
	35 – 6
93501–04M02	18 – 25
93503–16003	25 – 54
	27 – 57
93507–32009	25 – 52
	27 – 55
93511–32017	25 – 53
	27 – 56
93604–12M07	24 – 28
93605–10108	5 – 13
93606–12019	2 – 3
	24 – 7
	25 – 32
	27 – 34
	40 – 30
93606–19M23	23 – 13
93608–12M05	26 – 5
	28 – 5
93608–16M16	23 – 3
	23 – 20
93700–06M03	19 – 13
	19 – 24
94702–00400	4 – 39
95303–05600	37 – 14
95303–05700	37 – 11
95333–08600	16 – 32
	16 – 35
95380–04600	36 – 4
	36 – 8
	36 – 22

PART NO.	REF. NO.
95380–05600	33 – 7
	34 – 21
	35 – 21
	38 – 11
	38 – 20
95380–05700	7 – 30
95380–06600	1 – 4
	1 – 13
	1 – 16
	17 – 45
	33 – 40
	34 – 37
	35 – 37
	38 – 15
95380–08600	10 – 11
95380–12600	19 – 44
95380–14600	20 – 22
95380–14700	31 – 16
95780–10300	20 – 7
95895–06025	6 – 10
97013–06020	14 – 2
	14 – 21
	14 – 57
97013–08045	16 – 30
97027–06025	24 – 10
97075–06025	18 – 23
	24 – 5
97075–06030	23 – 11
97075–06070	23 – 7
97075–08025	4 – 13
97075–10030	21 – 32
97075–10040	20 – 25
97075–10045	26 – 6
	28 – 6
97095–06008	17 – 34
97095–06010	8 – 24
	14 – 10
	14 – 18
	19 – 7
	19 – 28
	23 – 28
97095–06012	1 – 6
	1 – 9
	6 – 12
	15 – 9
	15 – 20
	15 – 29
97095–06014	14 – 48

PART NO.	REF. NO.
97095–06014	15 – 6
97095–06016	10 – 12
	13 – 18
	14 – 43
	15 – 2
	15 – 11
	15 – 17
	17 – 13
97095–06020	2 – 10
97095–06025	2 – 45
	4 – 34
	13 – 7
	13 – 15
97095–06030	4 – 27
	12 – 10
	19 – 4
97095–06035	18 – 39
97095–06040	18 – 10
97095–06045	24 – 26
97095–08014	4 – 15
97095–08020	6 – 22
	19 – 16
97095–08025	25 – 41
	27 – 43
97303–05012	37 – 9
97380–05025	33 – 8
97380–06018	34 – 18
	35 – 18
97380–08030	33 – 33
97575–08540	2 – 39
	6 – 1
	23 – 2
97607–04110	12 – 6
97607–04310	22 – 32
97780–50620	1 – 35
97780–50625	1 – 24
97780–60620	14 – 9
	14 – 30
97780–60625	14 – 6
97880–06016	23 – 24
97885–04016	18 – 8
97885–06010	12 – 17
97885–06012	19 – 11
97885–06016	20 – 4
97890–05016	34 – 62
	35 – 70
97890–05025	34 – 14
	35 – 14

PART NO.	REF. NO.
97890–06018	34 – 45
	35 – 45
98507–04008	4 – 23
98580–03015	33 – 38
98580–04006	33 – 36
98580–04010	33 – 35
98580–05010	33 – 37
98780–04016	2 – 15
98780–05018	34 – 29
	35 – 29
98980–05010	38 – 9
98980–06020	38 – 14
99001–08600	25 – 18
	27 – 20
99530–08012	12 – 9
99530–10114	7 – 26
9E450–04533	36 – 2