YAMAHA

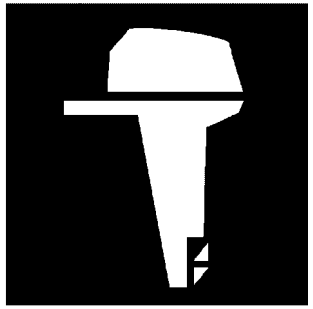

PARTS CATALOGUE
CATALOGO DE REPUESTOS

75A'16 (6GJ1)
85A'16 (688G)

YAMAHA
GENUINE
Parts & Accessories

1Q688-200SA

( )

75A/85A
PARTS CATALOGUE
©2016 by Yamaha Motor Co., Ltd.
1st edition, August 2016
All rights reserved.
Any reprinting or unauthorized use
without the written permission of
Yamaha Motor Co., Ltd.
is expressly prohibited.
Printed in Japan.

75A/85A
CATALOGO DE REPUESTOS
©2016 por Yamaha Motor Co., Ltd.
1ª edición, agosto 2016
Todos los derechos reservados.
Toda reproducción o uso no autorizado
sin el consentimiento escrito de
Yamaha Motor Co., Ltd.
quedan expresamente prohibidos
Impreso en Japón.

FOREWORD

This Parts Catalogue is related to the parts for the model(s) on the cover page. When you are ordering replacement parts, please refer to this Parts Catalogue and quote both part numbers and part names correctly.

1. Modifications or additions which have been made after the issue of the Parts Catalogue will be announced in the Parts News.
   It is advisable that you make the necessary corrections to the Parts Catalogue according to the Parts News.

2. Abbreviations
   The following abbreviations are used in this Parts Catalogue.
   "UR" Use specified parts number.
   "UN" Use as many as needed.
   "AP" Alternate Parts
   "LM" Locally Made (Parts need to be ordered locally)
   "F#" Frame No. (Applicable machine No.)
   "O/S" Over Size

3. The number of components for assembly
   - Parts, which are to be supplied in an assembly, are listed with a dot (.) in front of the part name as shown below.
   - The numeral appearing to the right of each component part indicates the quantity of parts for each assembly unit.

PART NO.	DESCRIPTION	Q'TY	REMARKS
2F5–83310–60	FRONT FLASHER LIGHT ASSY	2	
115–83311–60	.BULB (6V–18W)	1	

4. Applicable colours of graphics are represented in the "REMARKS" as shown below.

PART NO.	DESCRIPTION	Q'TY	REMARKS
2N4–24110–00–X5	FUEL TANK COMP.	2	MXR
3J1–24240–10	.GRAPHIC, FUEL TANK	1	FOR MXR

5. Note that the illustrations for reference in finding parts numbers are not to be used for assembling. When assembling, please use the applicable service manual.

6. The asterisk (*) before a reference number indicates modified items after the first edition.

7. Applicable Serial No.
   Engine Serial No.

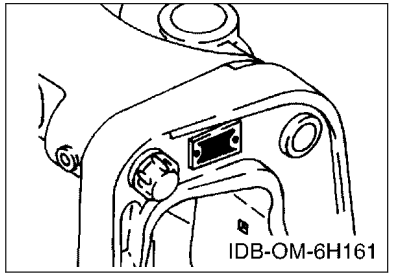

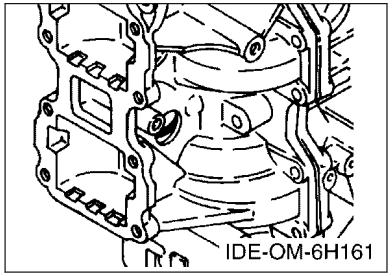

8. Applicable Engine Starting Serial No.

Model	Serial No.	Model	Serial No.
75A	692-1087059	85A	688-1049939

9. Applicable Colour Code

Abbreviation	Colour Name	Colour Code
DBN1	DARK BLUISH GRAY 1	008D

10. Quantity Column Information

Column No.	Name Of Q'ty Column	Applicable Model
1	ET	75AET,85AET
2	ED	75AED,85AED
3	EHD	75AEHD,85AEHD

PROLOGO

Este catálogo de repuestos corresponde a las piezas para el o los modelos que figuran en la página de portada. Al formular el pedido de repuestos, se ruega citar este catálogo y especificar correctamente el número y el nombre de las piezas.

1. Las modificaciones y agregados que se hayan realizado después de la edición de este Catálogo de Repuestos, serán anunciados en las Informaciones de Recambios.
   Es recomendable que se hagan las correcciones necesarias en el Catálogo de Repuestos de acuerdo con las Informaciones de Recambios.

2. Abreviaciones
   En este. Catálogo de Repuestos se emplean las siguientes abreviaciones.
   "UR" Usar el número de partes especificado
   "UN" Usar la cantidad necesaria
   "AP" Piezas sustitutivas
   "LM" Fabricación local (Hay que pedir los repuestos en las cercanías)
   "F#" Nº de bastidor (Nº aplicable a la máquina)
   "O/S" Sobredimensionado

3. La cantidad de componentes para el montaje
   - Los componentes, suministrados como conjunto, se describen con un punto (.) que precede al nombre del parte como se indica a continuación.
   - La numeración que aparece a la derecha de cada descripción indica la cantidad de partes por cada unidad de conjunto.

CODIGO Nº	DESCRIPCION	CANT.	OBSERVACIONES
2F5–83310–60	ENSAMBLAJE DE LA LUZ	2	
115–83311–60	.BOMBILLA (6V–18W)	1	

4. Los colores de los componentes se indican como sigue en la columna de "OBSERVACIONES".

CODIGO Nº	DESCRIPCION	CANT.	OBSERVACIONES
2N4–24110–00–X5	COMP. DEL TANQUE	2	MXR
3J1–24240–10	.GRAFICO, DEL TANQUE	1	PARA MXR

5. Debe tenerse en cuenta que las ilustraciones sirven como guia para la búsqueda de los números de partes y no deben usarse para el montaje. Durante el montaje, se recomienda usar el manual de taller correspondiente.

6. EL asterisco (*) antes del número de referencia indica los elementos modificados después de la primera edición.

7. Números de serie
   Nº de Serie del motor

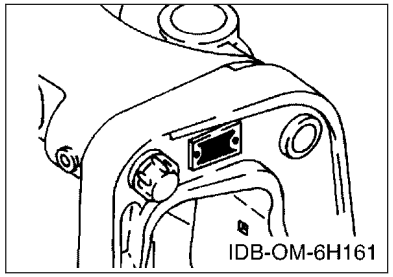

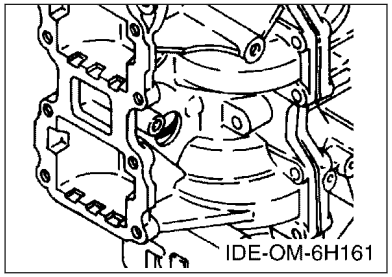

8. Números de serie del motor

Modelo	Nº de serie	Modelo	Nº de serie
75A	692-1087059	85A	688-1049939

9. Códigos de color aplicables

Abreviatura	Nombre de color	Código de color
DBN1	DARK BLUISH GRAY 1	008D

10. Informacion para la columna de cantidades

Columna Nº	Nombre de la columna de cantidades	Modelo aplicable
1	ET	75AET,85AET
2	ED	75AED,85AED
3	EHD	75AEHD,85AEHD

CONTENTS

SCHEDULED SERVICE PARTS.....1
TOP COWLING.....2
CYLINDER & CRANKCASE.....3
CRANKSHAFT & PISTON.....5
INTAKE.....7
CARBURETOR.....9
FUEL.....11
GENERATOR.....13
ELECTRICAL 1.....14
ELECTRICAL 2.....16
STARTING MOTOR.....17
BOTTOM COWLING.....18
STEERING.....20
CONTROL.....22
BRACKET 1.....25
BRACKET 2.....27
BRACKET 3.....29
BRACKET 4.....30
POWER TRIM & TILT ASSY.....32
UPPER CASING.....35
LOWER CASING & DRIVE 1.....37
LOWER CASING & DRIVE 2.....41
LOWER CASING & DRIVE 3.....45
FUEL TANK.....47
STEERING GUIDE.....48
REMOTE CONTROL BOX.....49
REMOTE CONTROL ASSY 1.....50
REMOTE CONTROL ASSY 2.....53
METER.....56
OPTIONAL PARTS.....57
REPAIR KIT 1.....58
REPAIR KIT 2.....60

INDEX

NUMERICAL INDEX.....62

CONTENIDO

PARTES DE REPUESTO TEMPORALES..... 1
SOPORTE SUPERIOR..... 2
CYLINDRO & CARTER..... 3
CIGUENAL & PISTON.....5
ADMISION.....7
CARBURADOR..... 9
COMBUSTIBLE..... 11
GENERADOR.....13
EQUIPO ELECTRICO 1..... 14
EQUIPO ELECTRICO 2..... 16
MOTOR DE ARRANQUE..... 17
CUBIERTA INFERIOR..... 18
DIRECCION.....20
CONTROL..... 22
SOPORTE 1..... 25
SOPORTE 2..... 27
SOPORTE 3..... 29
SOPORTE 4..... 30
COMPONER Y PODER VARILLA.....32
FUNDA SUPERIOR.....35
IMPULSOR E INFERIOR 1..... 37
IMPULSOR E INFERIOR 2..... 41
IMPULSOR E INFERIOR 3..... 45
DEPOSITO DE COMBUSTIBLE..... 47
DIRECCIONGUIAR..... 48
CONTROL REMOTO COMPLETO..... 49
CONTROL REMOTO COMPL 1.....50
CONTROL REMOTO COMPL 2.....53
MEDIDOR.....56
PARTES OPCIONALES..... 57
ESTUCHE REPARATION 1..... 58
ESTUCHE REPARATION 2..... 60

INDICE

INDICE NUMERICO..... 62

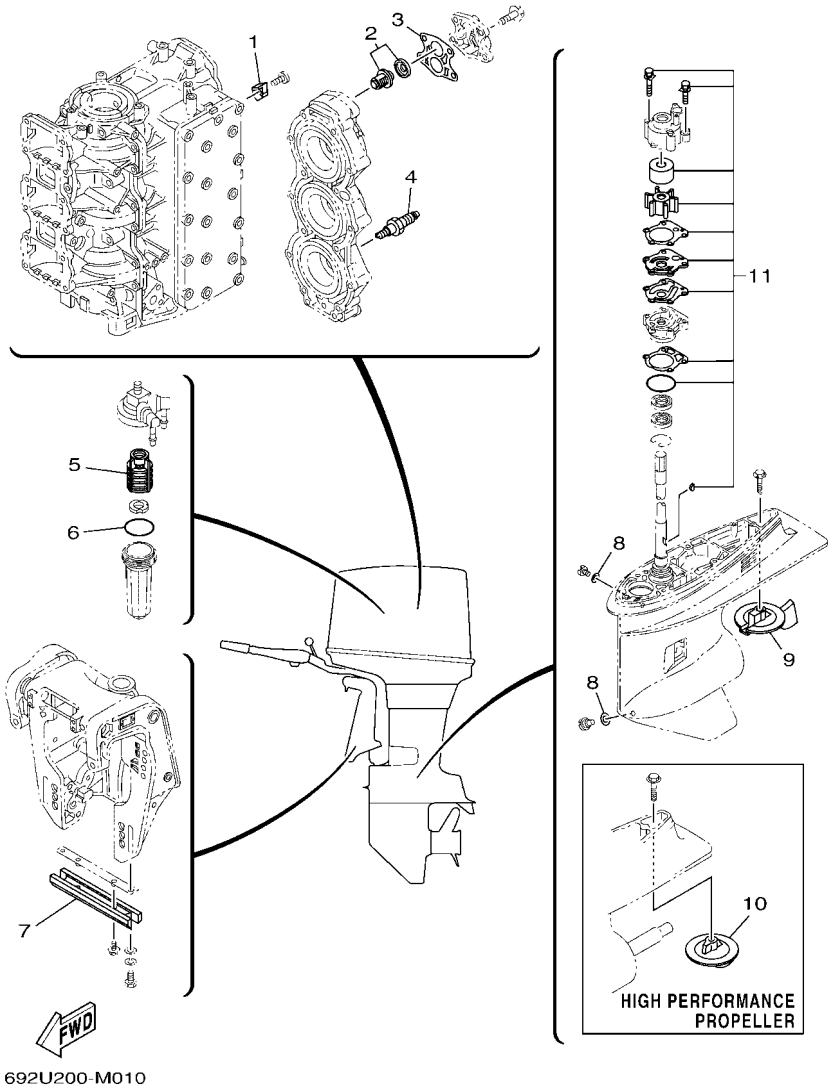

FIG. 1 SCHEDULED SERVICE PARTS — PARTES DE REPUESTO TEMPORALES

REF. NO.	PART NO. CODIGO Nº	DESCRIPTION DESCRIPCION	ET	ED	EHD			REMARKS OBSERVACIONES
1	688–11325–00	ANODE ANODO	2	2	2			
2	688–12411–11	THERMOSTAT TERMOSTAT	1	1	1			
3	688–12414–A1	GASKET, COVER EMPAQUE	1	1	1			
4	94702–00160	PLUG, SPARK (NGK B8HS-10) BUJIA (NGK B8HS-10)	3	3	3			UR UR
	94702–00247	PLUG, SPARK (NGK BR8HS-10) BUJIA (NGK BR8HS-10)	3		3			UR 85A-CHN,CAR(CE) UR 85A-CHN,CAR(CE)
5	61N–24563–00	ELEMENT, FILTER ELEMENTO DEL FILTRO	1	1	1			
6	93210–32738	O-RING ANILLO O	1	1	1			
7	6H1–45251–03	ANODE CATODE	1	1	1			
8	90430–08003	GASKET JUNTA	2	2	2			
9	67F–45371–00	TAB-TRIM QUILLA ESTABILIZADOR	1	1	1			
10	6E5–45371–10	TAB-TRIM QUILLA ESTABILIZADOR	1	1	1			
11	692–W0078–02	WATER PUMP REPAIR KIT ESTUCHE REPARACION BOMBA AGUA	1	1	1			

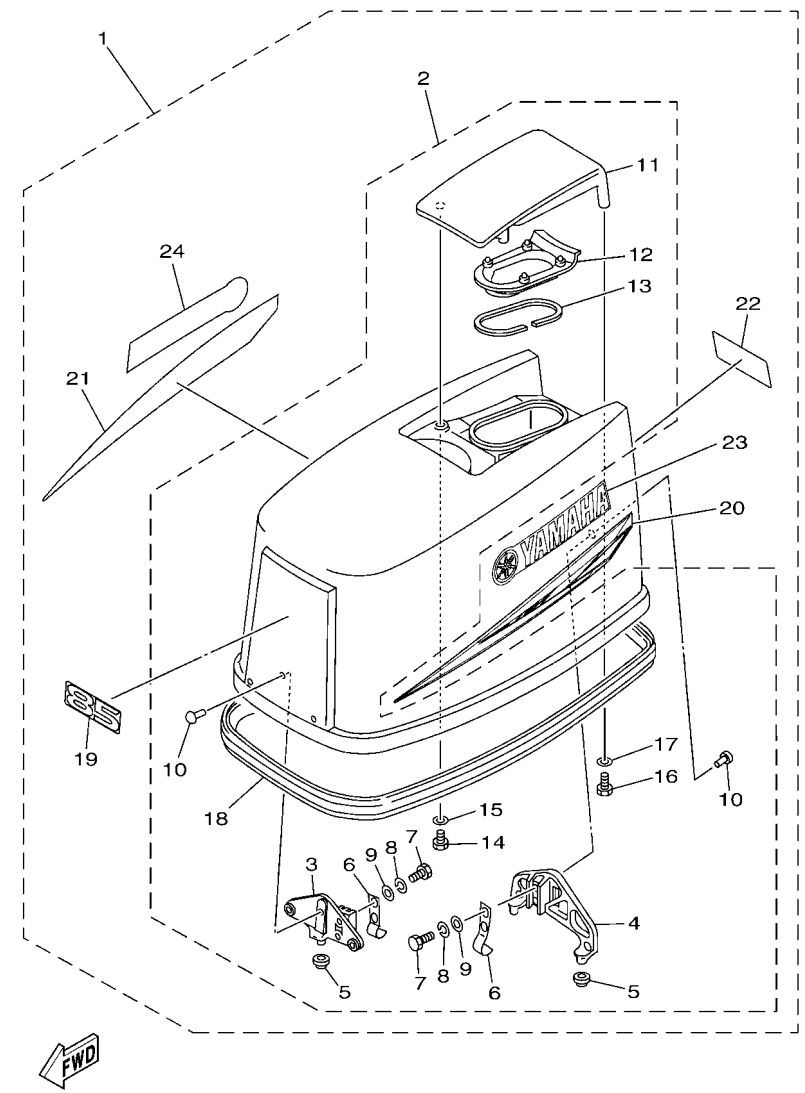

688G200-Q020

FIG. 2 TOP COWLING — SOPORTE SUPERIOR

REF. NO.	PART NO. CODIGO Nº	DESCRIPTION DESCRIPCION	ET	ED	EHD			REMARKS OBSERVACIONES
1	688–42610–11	TOP COWLING ASSY SOPORTE SUPERIOR COMPL.	1	1	1			85A 85A
	692–42610–71	TOP COWLING ASSY SOPORTE SUPERIOR COMPL.	1	1	1			75A 75A
2	688–4261A–10	.TOP COWLING W/O GRAPHICS .SOPORTE SUPERIOR SIN GRAFICOS	1	1	1			
3	688–42647–00	..HOLDER, CLAMP BAND ..MORDAZA DE ABRAZADERA	1	1	1			
4	688–42649–00	..HOLDER, CLAMP BAND ..MORDAZA DE ABRAZADERA	1	1	1			
5	663–42662–00	..DAMPER ..AMORTIGUADOR	3	3	3			
6	688–42652–10	..HOOK ..GANCHO	2	2	2			
7	97095–06018	..BOLT ..PERNO	2	2	2			
8	92995–06100	..WASHER, SPRING ..ARANDELA	2	2	2			
9	92995–06600	..WASHER ..ARANDELA	2	2	2			
10	90266–06009	..RIVET ..REMACHE	6	6	6			
11	688–42613–01–8D	..MOLDING, AIR DUCT ..MOLDURA CONDUCTO AIRE	1	1	1			
12	688–42618–00	..AIR SHROUD, TOP COWLING ..CUBIERTA AIRE PARTE SUPERIOR	1	1	1			
13	688–42628–00	..SEAL ..SELLO DE GOMA	1	1	1			
14	97095–06016	..BOLT ..PERNO	2	2	2			
15	92995–06600	..WASHER ..ARANDELA	2	2	2			
16	97095–06025	..BOLT ..PERNO	2	2	2			
17	92995–06600	..WASHER ..ARANDELA	2	2	2			
18	688–42615–00	..SEAL ..SELLO	1	1	1			
19	688–42678–40	.GRAPHIC, REAR .CALCAMONIA TRASERA	1	1	1			85A 85A
	692–42678–40	.GRAPHIC, REAR .CALCAMONIA TRASERA	1	1	1			75A 75A
20	688–42675–40	.GRAPHIC, SIDE 1 .CALCAMONIA LATERAL 1	1	1	1			
21	688–42676–40	.GRAPHIC, SIDE 2 .CALCAMONIA LATERAL 2	1	1	1			
22	688–42678–40	.GRAPHIC, REAR .CALCAMONIA TRASERA	1	1	1			85A 85A
	692–42678–40	.GRAPHIC, REAR .CALCAMONIA TRASERA	1	1	1			75A 75A
23	688–42681–40	.MARK, COWLING .MARCA DE CUBIERTA	1	1	1			
24	688–42681–40	.MARK, COWLING .MARCA DE CUBIERTA	1	1	1			

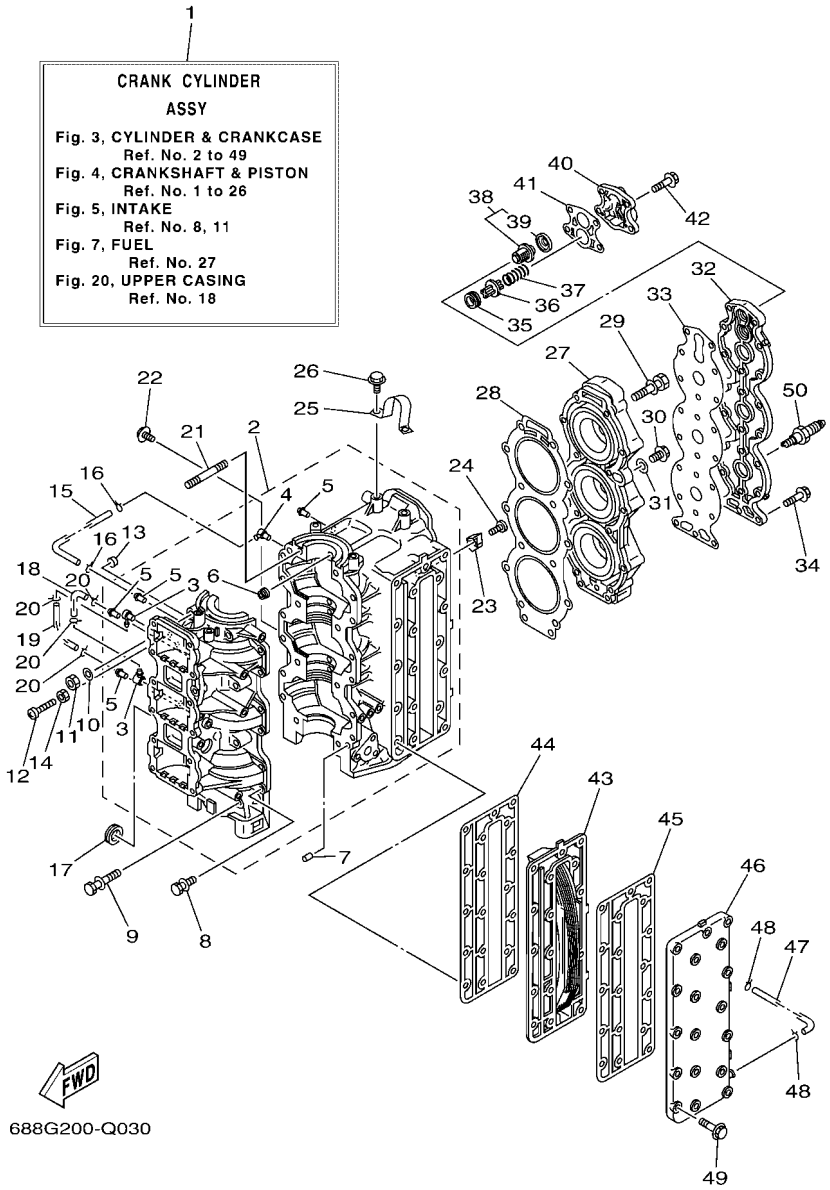

FIG. 3 CYLINDER & CRANKCASE — CYLINDRO & CARTER

REF. NO.	PART NO. CODIGO Nº	DESCRIPTION DESCRIPCION	ET	ED	EHD			REMARKS OBSERVACIONES
1	688–W0090–44–1S	CRANK CYLINDER ASSY BLOQUE MOTOR COMPLETO	1	1	1			85A 85A
	692–W0090–45–1S	CRANK CYLINDER ASSY BLOQUE MOTOR COMPLETO	1	1	1			75A 75A
2	688–15100–07	CRANKCASE ASSY CARTER COMPLETO	1	1	1			
3	688–11370–01	.CHECK VALVE ASSY .VALVULA DE CONTROL COMPL.	2	2	2			
4	650–11370–01	.CHECK VALVE ASSY .VALVULA DE CONTROL COMPL.	1	1	1			
5	624–14485–00	.PIPE, JOINT .TUBO DE UNION	4	4	4			
6	663–11518–01	.LOCK, BEARING .SEGURO BALERO	3	3	3			
7	99530–08012	PIN, DOWEL PASADOR, DE ESPIGA	2	2	2			
8	90119–06M12	BOLT, WITH WASHER TORNILLO CON ARANDELA	12	12	12			
9	90119–10005	BOLT, WITH WASHER TORNILLO CON ARANDELA	6	6	6			
10	90201–10008	WASHER, PLATE ARANDELA PLANA	2	2	2			
11	95313–10600	NUT TUERCA	2	2	2			
12	90157–06014	SCREW, PAN HEAD TORNILLO CABEZA CONICA PLANA	1	1	1			
13	688–44194–00	CAP TAPA	1	1	1			
14	95303–06700	NUT TUERCA	1	1	1			
15	90445–07260	HOSE (L276) TUBO (L276)	1	1	1			
16	90467–06016	CLIP PRESILLA	2	2	2			
17	90480–24M04	GROMMET TAPON	1	1	1			
18	90445–07M00	HOSE (L100) TUBO (L100)	1	1	1			
19	90445–07M23	HOSE (L408) TUBO (L408)	1	1	1			
20	90467–06016	CLIP PRESILLA	4	4	4			
21	90116–10M06	BOLT, STUD ESPARRAGO	2	2	2			
22	97595–06512	BOLT, WITH WASHER PERNO CON ARANDELA	1	1	1			
23	688–11325–00	ANODE ANODO	2	2	2			
24	98780–04015	SCREW, FLAT HEAD TORNILLO CABEZA PLANA	2	2	2			
25	688–11119–01	HANGER, ENGINE SOPORTE DEL MOTOR	1	1	1			
26	90119–08MA3	BOLT, WITH WASHER TORNILLO CON ARANDELA	2	2	2			

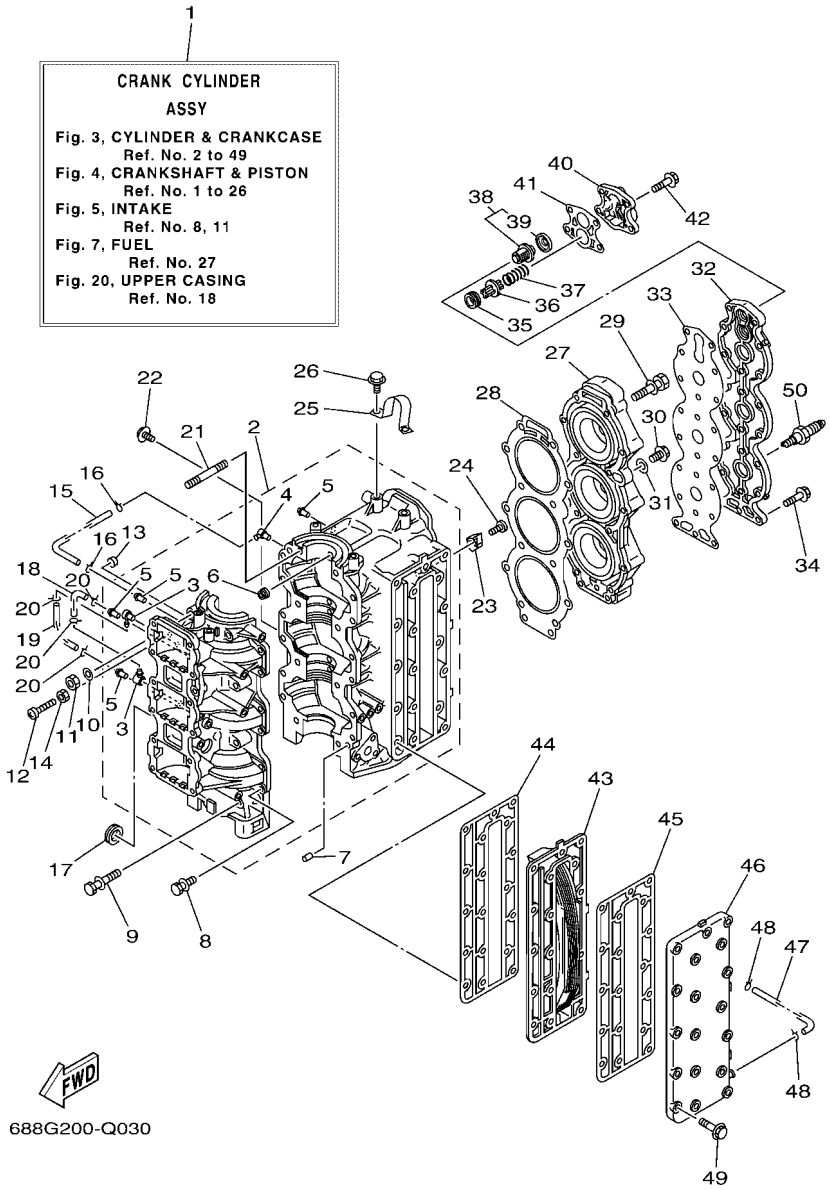

FIG. 3 CYLINDER & CRANKCASE — CYLINDRO & CARTER

REF. NO.	PART NO. CODIGO Nº	DESCRIPTION DESCRIPCION	ET	ED	EHD			REMARKS OBSERVACIONES
27	688–11111–02–1S	HEAD, CYLINDER 1 CULATA CILINDRO 1	1	1	1			85A 85A
	692–11111–01–1S	HEAD, CYLINDER 1 CULATA CILINDRO 1	1	1	1			75A 75A
28	688–11181–A2	GASKET, CYLINDER HEAD 1 JUNTA, DE CULATA 1	1	1	1			
29	90119–08MA8	BOLT, WITH WASHER TORNILLO CON ARANDELA	14	14	14			
30	90340–14M06	PLUG, STRAIGHT SCREW TORNILLO, DE DRENAJE	1	1	1			
31	90430–14115	GASKET JUNTA	1	1	1			
32	688–11191–00–1S	COVER, CYLINDER HEAD 1 TAPA CULATA DE CILINDRO 1	1	1	1			
33	688–11193–A1	GASKET, HEAD COVER 1 EMPAQUE	1	1	1			
34	90119–06MA3	BOLT, WITH WASHER TORNILLO CON ARANDELA	18	18	18			
35	90480–20M05	GROMMET TAPON	1	1	1			
36	688–12416–00	VALVE, PRESSURE CONTROL VALVULA DE CONTROL DE PRESION	1	1	1			
37	90501–16M11	SPRING, COMPRESSION RESORTE DE COMPRESION	1	1	1			
38	688–12411–11	THERMOSTAT TERMOSTAT	1	1	1			
39	688–12412–00	.SEAL, THERMOSTAT .SELLO TERMOSTATO	1	1	1			
40	688–12413–00–1S	COVER, THERMOSTAT CUBIERTA TERMOSTATO	1	1	1			
41	688–12414–A1	GASKET, COVER EMPAQUE	1	1	1			
42	90119–06MA5	BOLT, WITH WASHER TORNILLO CON ARANDELA	4	4	4			
43	688–41111–00–1S	INNER COVER, EXHAUST CUBIERTA INTERIOR DE ESCAPE	1	1	1			
44	688–41112–A0	GASKET, EXHAUST INNER COVER EMPAQUE	1	1	1			
45	688–41114–A0	GASKET, EXHAUST OUTER COVER EMPAQUE	1	1	1			
46	688–41113–00–1S	OUTER COVER, EXHAUST CUBOERTA EXTERIOR DE ESCAPE	1	1	1			
47	663–24312–01	PIPE 2 TUBO 2	1	1	1			
48	90467–08004	CLIP PRESILLA	2	2	2			
49	90119–08020	BOLT, WITH WASHER TORNILLO CON ARANDELA	18	18	18			
50	94702–00160	PLUG, SPARK (NGK B8HS-10) BUJIA (NGK B8HS-10)	3	3	3			
	94702–00247	PLUG, SPARK (NGK BR8HS-10) BUJIA (NGK BR8HS-10)	3		3			85A-CHN,CAR(CE) 85A-CHN,CAR(CE)

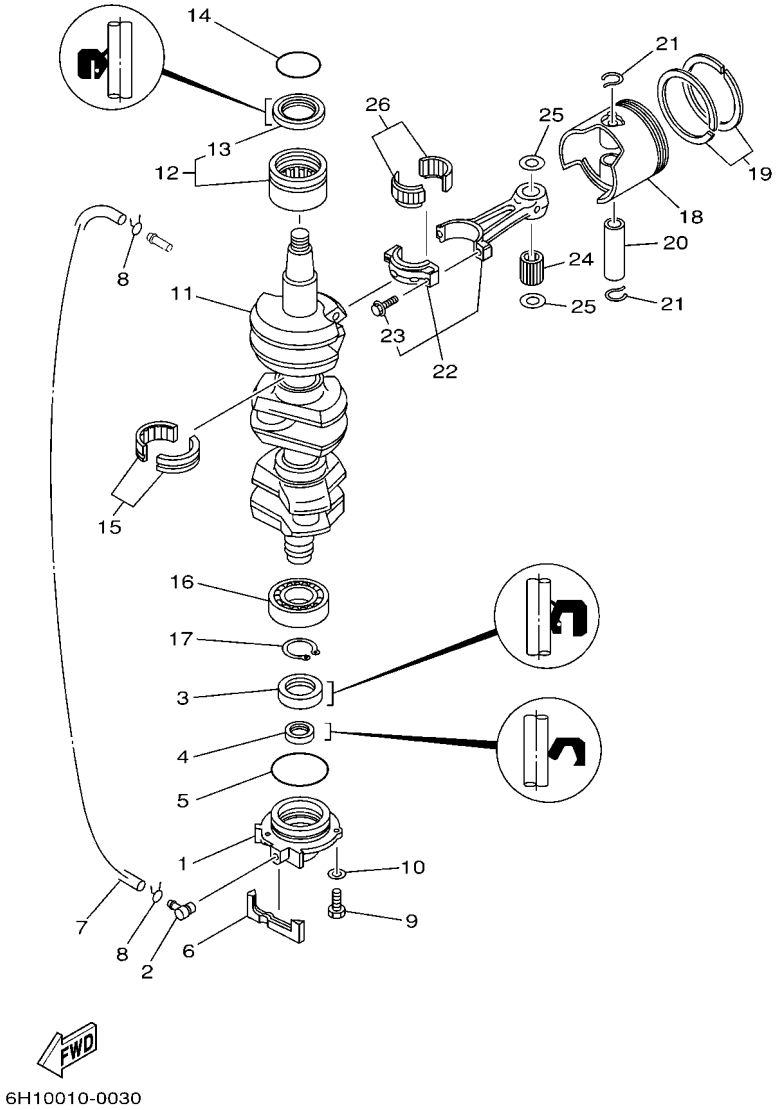

FIG. 4 CRANKSHAFT & PISTON — CIGUENAL & PISTON

REF. NO.	PART NO. CODIGO Nº	DESCRIPTION DESCRIPCION	ET	ED	EHD			REMARKS OBSERVACIONES
1	6H1–15359–01–94	HOUSING, OIL SEAL CAJA DE SELLO DE ACEITE	1	1	1			
2	688–11370–01	CHECK VALVE ASSY VALVULA DE CONTROL COMPL.	1	1	1			
3	93102–30M05	OIL SEAL SELLO ACEITE	1	1	1			
4	93104–20M02	OIL SEAL SELLO ACEITE	1	1	1			
5	93210–62269	O-RING ANILLO O	1	1	1			
6	688–15379–00	SEAL, CRANKCASE SELLO DE CARTER	1	1	1			
7	90445–07M86	HOSE (L460) TUBO (L460)	1	1	1			
8	90467–06016	CLIP PRESILLA	2	2	2			
9	97095–06020	BOLT PERNO	3	3	3			
10	92995–06600	WASHER ARANDELA	3	3	3			
11	688–11411–01	CRANKSHAFT CIGUENAL	1	1	1			
12	93310–636U4	BEARING COJINETE DE RODILLOS	1	1	1			
13	93102–36M02	.OIL SEAL .SELLO ACEITE	1	1	1			
14	93210–46M16	O-RING ANILLO O	1	1	1			
15	93310–835U8	BEARING COJINETE DE RODILLOS	2	2	2			
16	93306–206U5	BEARING COJINETE	1	1	1			
17	93410–32M00	CIRCLIP SEGURO	1	1	1			
18	688–11631–03–94	PISTON (STD) PISTON (NORMA)	3	3	3			
	688–11635–03	PISTON (0.25MM O/S) PISTON (0.25MM O/S)	3	3	3			AP AP
	688–11636–03	PISTON (0.50MM O/S) PISTON (0.50MM O/S)	3	3	3			AP AP
19	688–11603–A0	PISTON RING SET (STD) JUEGO DE ANILLOS (NORMA)	3	3	3			
	688–11604–A0	PISTON RING SET (0.25MM O/S) JUEGO DE ANILLOS (0.25MM O/S)	3	3	3			AP AP
	688–11605–A0	PISTON RING SET (0.50MM O/S) JUEGO DE ANILLOS (0.50MM O/S)	3	3	3			AP AP
20	663–11633–00	PIN, PISTON PASADOR, PISTON	3	3	3			
21	688–11634–00	CLIP, PISTON PIN PRESILLA, BULON DE PISTON	6	6	6			
22	688–11650–03	CONNECTING ROD ASSY BIELA COMPLETA	3	3	3			
23	90109–08022	.BOLT .PERNO	2	2	2			

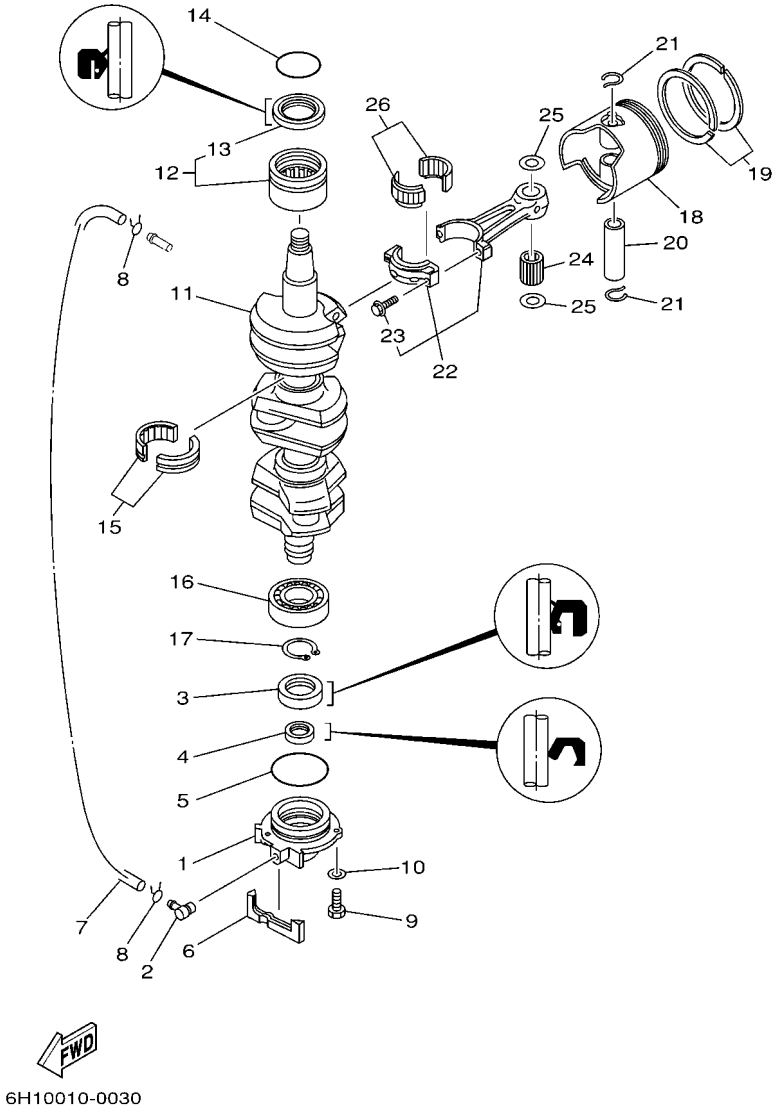

FIG. 4 CRANKSHAFT & PISTON — CIGUENAL & PISTON

REF. NO.	PART NO. CODIGO Nº	DESCRIPTION DESCRIPCION	ET	ED	EHD			REMARKS OBSERVACIONES
24	93603–21111	PIN, DOWEL PASADOR DE CLAVIJA	84	84	84			
25	90201–20417	WASHER, PLATE ARANDELA PLANA	6	6	6			
26	93310–730V8	BEARING COJINETE DE RODILLOS	3	3	3			

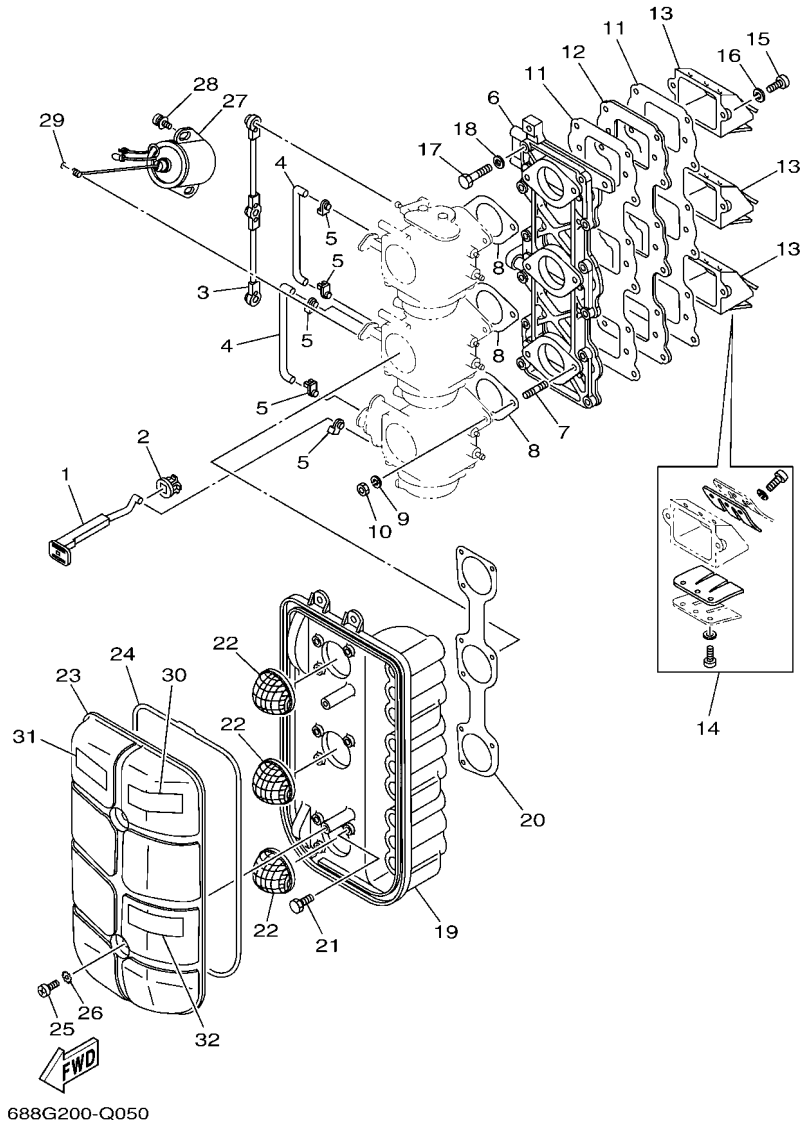

FIG. 5 INTAKE — ADMISION

REF. NO.	PART NO. CODIGO Nº	DESCRIPTION DESCRIPCION	ET	ED	EHD			REMARKS OBSERVACIONES
1	692–41256–01	ROD, CHOKE 1 VARILLA DE AHOGADOR	1	1	1			
2	689–41273–00	GROMMET TAPON PROTECTOR	1	1	1			
3	688–41217–01	ROD, ACCEL. LEVER VARILLA PALANCA ACELERADOR	1	1	1			
4	688–41257–01	ROD, CHOKE 2 VARILLA DE AHOGADOR	2	2	2			
5	661–41262–02	JOINT, CHOKE LEVER CONECTOR DE AHOGADOR	5	5	5			
6	688–13641–01	MANIFOLD, INTAKE 1 CONECTOR DE ADMISSION 1	1	1	1			
7	90116–06122	BOLT, STUD ESPARRAGO	6	6	6			
8	688–14198–A2	GASKET EMPAQUE	3	3	3			
9	92995–06100	WASHER, SPRING ARANDELA	6	6	6			
10	95380–06600	NUT, HEXAGON TUERCA	6	6	6			
11	688–13621–A1	GASKET, VALVE SEAT JUNTA, DE VALV.DE EMPAQUE	2	2	2			
12	688–13624–00	PLATE,REED VALVE PLACA DE VALVULA DE LAMINAS	1	1	1			
13	688–13610–00	REED VALVE ASSY VALVULA DE LAMINAS COMPLETA	3	3	3			85A 85A
	692–13610–00	REED VALVE ASSY VALVULA DE LAMINAS COMPLETA	3	3	3			75A 75A
14	688–W0004–00	.REED SET .JUEGO DE VALVULAS DE LENGUETA	1	1	1			FOR 688-13610-00 FOR 688-13610-00
	692–W0004–00	.REED SET .JUEGO DE VALVULAS DE LENGUETA	1	1	1			FOR 692-13610-00 FOR 692-13610-00
15	97880–05020	SCREW, PAN HEAD TORNILLO DE CABEZA CON PLANA	6	6	6			
16	92990–05100	WASHER, SPRING ARANDELA PLANA	6	6	6			
17	97013–06030	BOLT PERNO	12	12	12			
18	92903–06600	WASHER, PLATE RONDANA SENCILLA	12	12	12			
19	688–14417–01	COVER 1 CUBIERTA 1	1	1	1			
20	688–14483–A0	GASKET EMPAQUE	1	1	1			
21	97013–06018	BOLT PERNO	6	6	6			
22	688–14481–00	CAP, CARBURETOR TAPA DE CARBURADOR	3	3	3			
23	688–14418–01	COVER 2 CUBIERTA 2	1	1	1			
24	688–14416–01	GASKET, AIR CLEANER EMPAQUE	1	1	1			
25	97885–06016	SCREW, PAN HEAD TORNILLO A MUESCA	2	2	2			

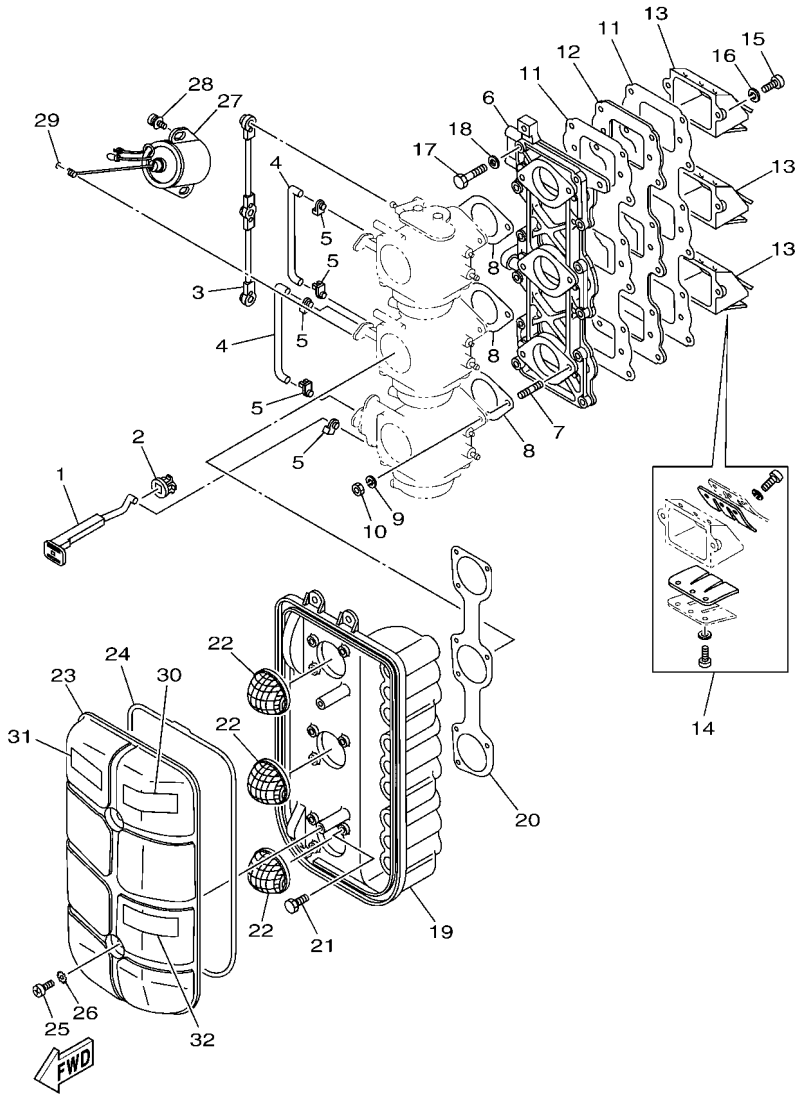

688G200-Q050

FIG. 5 INTAKE — ADMISION

REF. NO.	PART NO. CODIGO Nº	DESCRIPTION DESCRIPCION	ET	ED	EHD			REMARKS OBSERVACIONES
26	90209–06M05	WASHER ARANDELA DE SEPARACION	2	2	2			
27	688–86110–01	SOLENOID SOLENOIDE	1	1				
28	90159–06M19	SCREW, WITH WASHER TORNILLO CON VALONA	2	2				
29	93210–03261	O-RING ANILLO O	1	1				
30	6EE–81994–40	LABEL, SAFETY ETIQUETA DE SEGURIDAD	1	1	1			
31	6EE–81995–40	LABEL, WARNING ETIQUETA DE PRECAUCION	1	1	1			
32	6AG–81996–00	MARK MARCA	1					FOR CAR(CE),RUS FOR CAR(CE),RUS

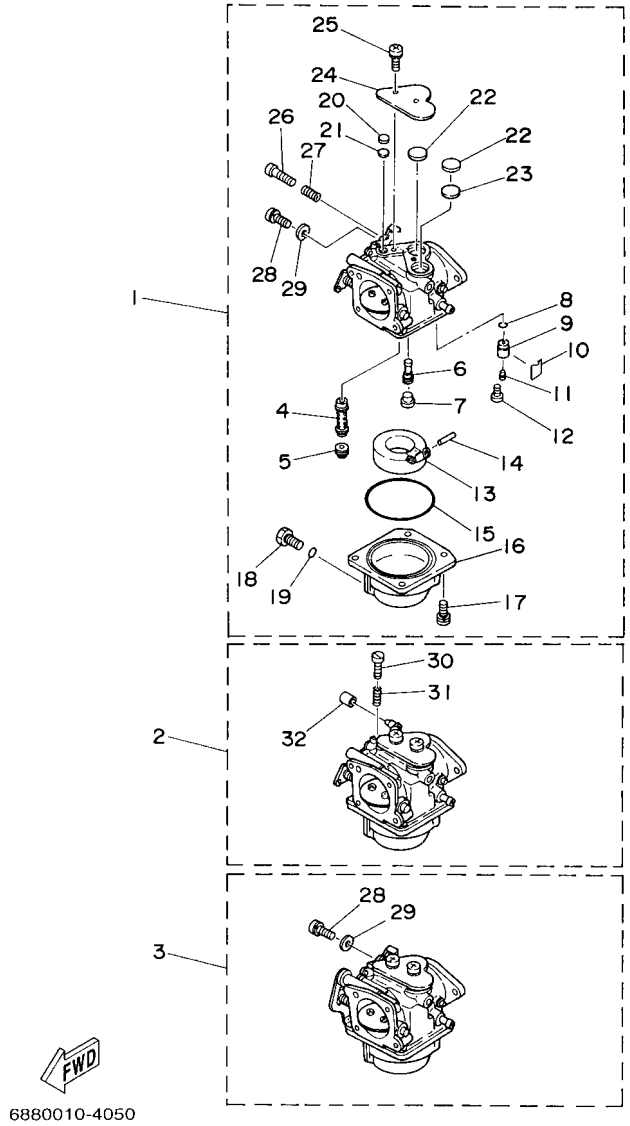

FIG. 6 CARBURETOR — CARBURADOR

REF. NO.	PART NO. CODIGO Nº	DESCRIPTION DESCRIPCION	ET	ED	EHD			REMARKS OBSERVACIONES
1	688–14301–40	CARBURETOR ASSY 1 CARBURADOR COMPLETO 1	1	1	1			85A 85A
	692–14301–26	CARBURETOR ASSY 1 CARBURADOR COMPLETO 1	1	1	1			75A 75A
2	688–14302–40	CARBURETOR ASSY 2 CARBURADOR COMPLETO 2	1	1	1			85A 85A
	692–14302–26	CARBURETOR ASSY 2 CARBURADOR COMPLETO 2	1	1	1			75A 75A
3	688–14303–40	CARBURETOR ASSY 3 CARBURADOR COMPLETO 3	1	1	1			85A 85A
	692–14303–26	CARBURETOR ASSY 3 CARBURADOR COMPLETO 3	1	1	1			75A 75A
4	688–14947–00	.JET, NEEDLE .INYECTOR DE AGUJA	3	3	3			85A 85A
	692–14947–00	.JET, NEEDLE .INYECTOR DE AGUJA	3	3	3			75A 75A
5	676–14943–40	.JET, MAIN (#165) .INYECTOR PRINCIPAL (#165)	3	3	3			85A 85A
	676–14943–42	.JET, MAIN (#175) .INYECTOR PRINCIPAL (#175)	3	3	3			75A 75A
6	676–14948–18	.JET (#78) .INYECTOR (#78)	3	3	3			85A 85A
	676–14948–19	.JET (#80) .INYECTOR (#80)	3	3	3			75A 75A
7	676–14966–00	.CAP .TAPA	3	3	3			
8	93210–04228	.O-RING .ANILLO O	3	3	3			
9	692–14590–01	.NEEDLE VALVE ASSY .VALVULA DE AGUJA COMPLETA	3	3	3			
10	663–14159–00	.CLIP .PRESILLA	3	3	3			
11	676–14186–00	.PIN, FLOAT .PASADOR DE LA BOYA	3	3	3			
12	98580–04008	.SCREW, PAN HEAD .TORNILLO DE CABEZA CRUZADA	3	3	3			
13	676–14985–01	.FLOAT .BOIA	3	3	3			
14	688–14548–00	.PIN, FLOAT ARM .PASADOR DE BRAZO DE BOIA	3	3	3			
15	676–14984–00	.GASKET, FLOAT CHAMBER .EMPAQUE CAMARA DE BOIA	3	3	3			
16	688–14980–00	.BODY, FLOAT CHAMBER .CUERPO CAMARA DE BOIA	3	3	3			
17	97980–04114	.SCREW, WITH WASHER .TORNILLO, CON ARANDELA	12	12	12			
18	6H3–14992–00	.SCREW, DRAIN .TORNILLO,SEGURO	3	3	3			
19	93210–04230	.O-RING .ANILLO O	3	3	3			
20	663–14126–00	.GASKET .EMPAQUE	3	3	3			
21	663–14527–00	.PLATE .PLACA	3	3	3			

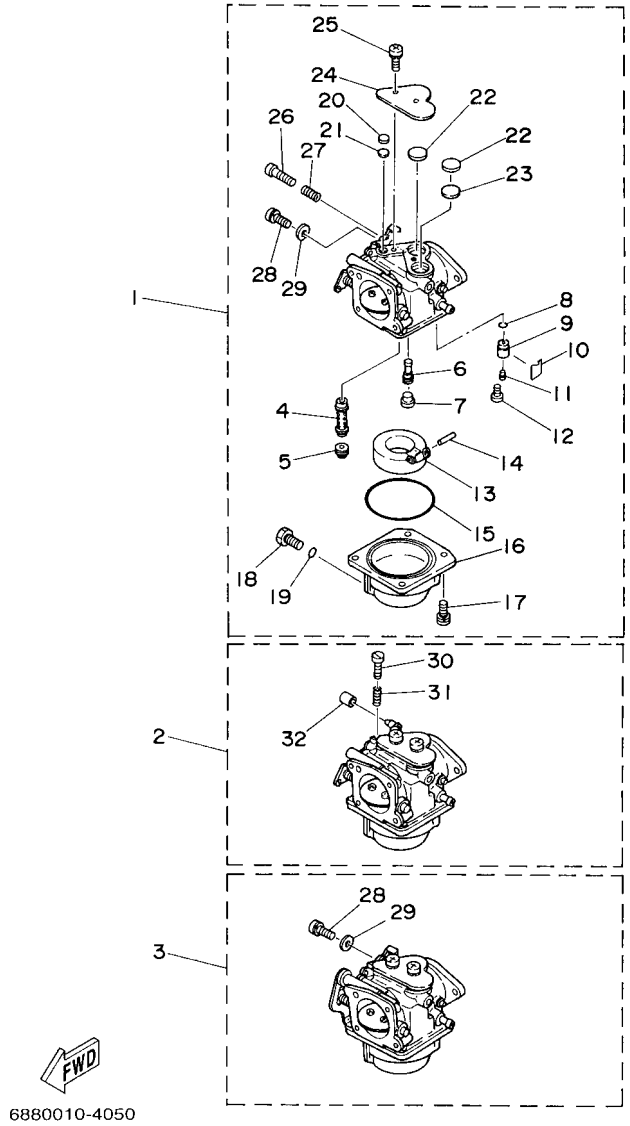

FIG. 6 CARBURETOR — CARBURADOR

REF. NO.	PART NO. CODIGO Nº	DESCRIPTION DESCRIPCION	ET	ED	EHD			REMARKS OBSERVACIONES
22	688–14126–00	.GASKET .EMPAQUE	6	6	6			
23	688–14527–00	.PLATE .PLACA	3	3	3			
24	688–14572–01	.PLATE, STAY .PLACA DE SOPORTE	3	3	3			
25	97980–05310	.SCREW, WITH WASHER .TORNILLO, CON ARANDELA	6	6	6			
26	692–14923–00	.SCREW, PILOT .TORNILLO DE AJUSTE	3	3	3			
27	679–14555–00	.SPRING .RESORTE	3	3	3			
28	6K5–14592–00	.SCREW .TORNILLO	2	2	2			#1,3 #1,3
29	90201–05652	.WASHER, PLATE .ARANDELA PLANA	2	2	2			#1,3 #1,3
30	63V–14523–00	.SCREW, STOP .TORNILLO DE TOPE	1	1	1			#2 #2
31	90501–10326	.SPRING, COMPRESSION .RESORTE DE COMPRESION	1	1	1			#2 #2
32	6H2–14578–00	.COLLAR .COLLAR	1	1	1			#2 #2

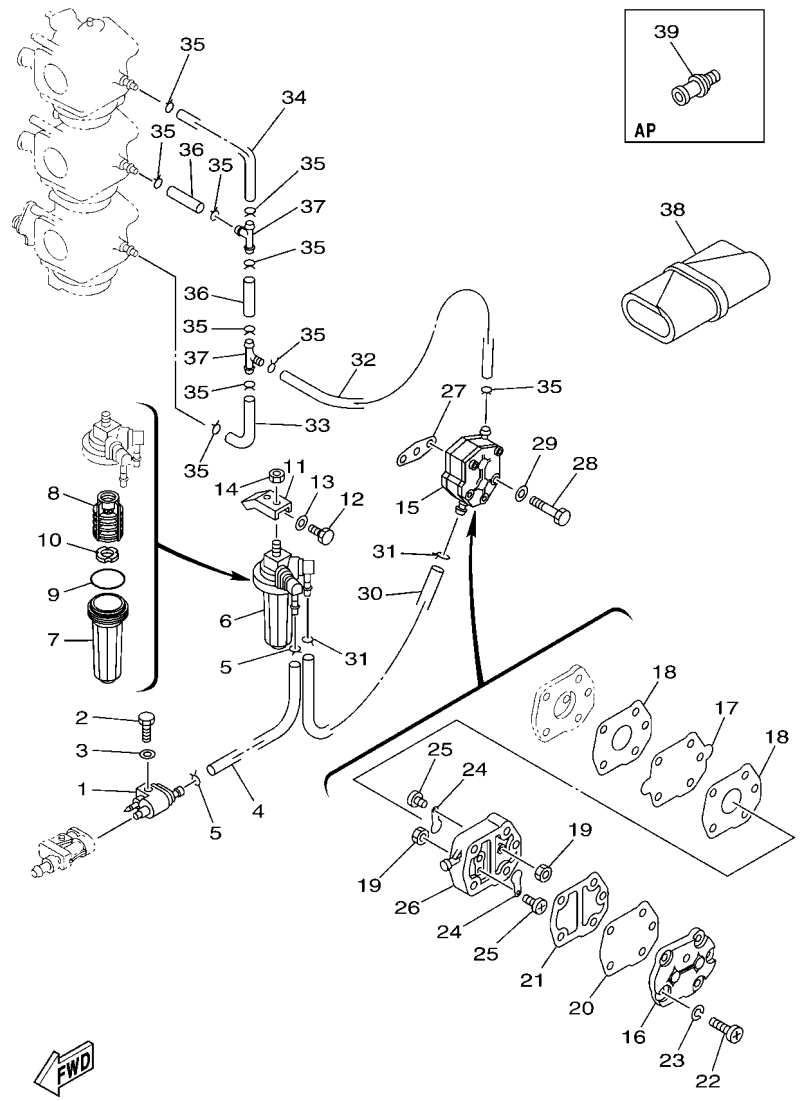

688D200-M070

FIG. 7 FUEL — COMBUSTIBLE

REF. NO.	PART NO. CODIGO Nº	DESCRIPTION DESCRIPCION	ET	ED	EHD			REMARKS OBSERVACIONES
1	6G1–24304–10	FUEL PIPE JOINT COMP. 1 CONECTOR MANGUERA COMBUST.1	1	1	1			
2	97095–06020	BOLT PERNO	1	1	1			
3	92995–06600	WASHER ARANDELA	1	1	1			
4	90445–09090	HOSE (L185) TUBO (L185)	1	1	1			
5	90467–08004	CLIP PRESILLA	2	2	2			
6	64J–24560–00	FILTER ASSY FILTRO COMPLETO	1	1	1			
7	68V–24521–01	.CUP, FILTER .COPA DE FILTRO	1	1	1			
8	61N–24563–00	.ELEMENT, FILTER .ELEMENTO DEL FILTRO	1	1	1			
9	93210–32738	.O-RING .ANILLO O	1	1	1			
10	68V–24469–01	.FLOAT, WATER LEVEL .BOIA	1	1	1			
11	648–24566–02	BRACKET, FILTER SOPORTE DEL FILTRO	1	1	1			
12	97013–06014	BOLT PERNO	1	1	1			
13	92903–06600	WASHER, PLATE RONDANA SENCILLA	1	1	1			
14	95380–08600	NUT TUERCA	1	1	1			
15	692–24410–00	FUEL PUMP ASSY BOMBA DE COMBUSTIBLE COMPLETA	1	1	1			
16	6A0–24413–00	.BODY 2 .CUERPO 2	1	1	1			
17	692–24411–00	.DIAPHRAGM .DIAFRAGMA	1	1	1			
18	648–24434–01	.GASKET, BODY .EMPAQUE	2	2	2			
19	95380–03600	.NUT .TUERCA	2	2	2			
20	663–24411–00	.DIAPHRAGM .DIAFRAGMA	1	1	1			
21	648–24435–02	.GASKET, BODY 2 .EMPAQUE	1	1	1			
22	98503–05028	.SCREW, PAN HEAD .TORNILLO DE CABEZA DE CONO ACH	3	3	3			
23	92990–05100	.WASHER, SPRING .ARANDELA PLANA	3	3	3			
24	6A0–24421–01	.VALVE, CHECK .VALVULA DE RETENCION	2	2	2			
25	6A0–14325–00	.SCREW, PAN HEAD .TORNILLO CABEZA REDONDA	2	2	2			
26	6A0–24412–02	.BODY 1 .CUERPO 1	1	1	1			
27	650–24431–A0	GASKET, FUEL PUMP 1 EMPAQUE BOMBA COMBUST 1	1	1	1			

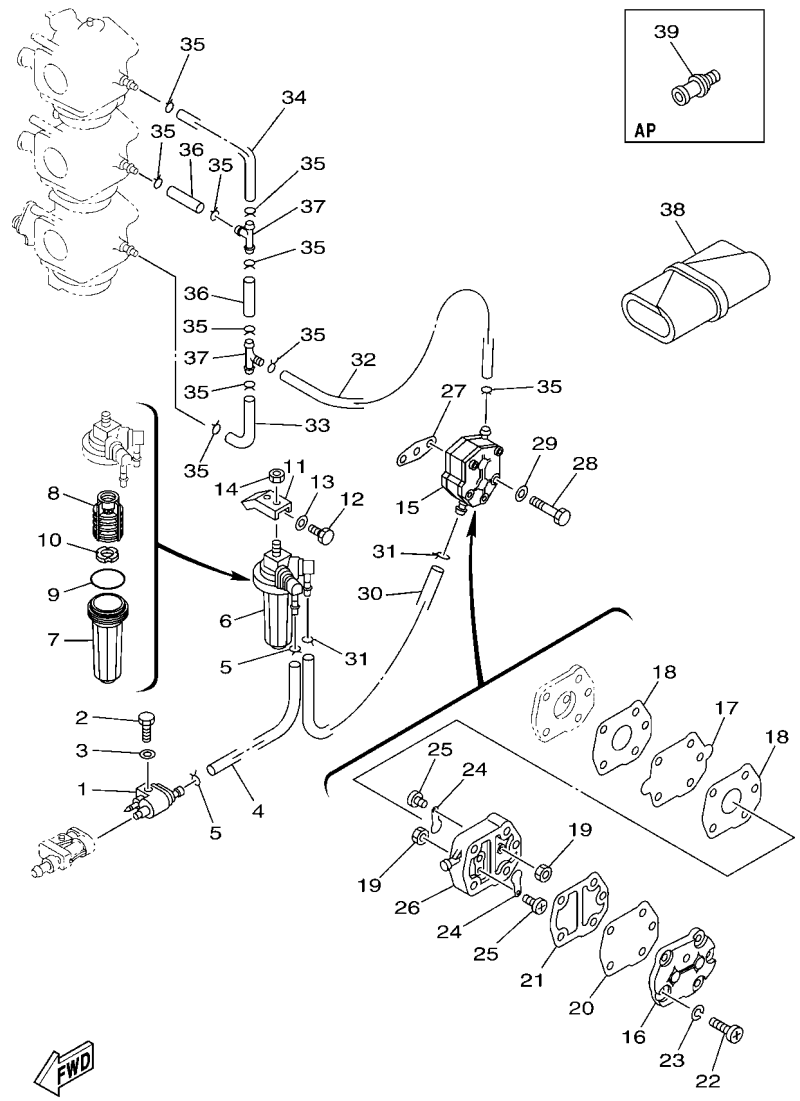

688D200-M070

FIG. 7 FUEL — COMBUSTIBLE

REF. NO.	PART NO. CODIGO Nº	DESCRIPTION DESCRIPCION	ET	ED	EHD			REMARKS OBSERVACIONES
28	97095–06040	BOLT PERNO	2	2	2			
29	92995–06600	WASHER ARANDELA	2	2	2			
30	90445–09097	HOSE (L250) TUBO (L250)	1	1	1			
31	90467–08004	CLIP PRESILLA	2	2	2			
32	90445–09097	HOSE (L250) TUBO (L250)	1	1	1			
33	688–24313–00	PIPE 3 TUBO 3	1	1	1			
34	688–24314–00	PIPE 4 TUBO 4	1	1	1			
35	90467–08004	CLIP PRESILLA	10	10	10			
36	90445–09220	HOSE (L30) TUBO (L30)	2	2	2			
37	688–24378–00	PIPE, JOINT 3 TUBO DE UNION 3	2	2	2			
38	656–W2810–02	TOOL KIT JUEGO DE HERRAMIENTAS	1	1	1			
39	6E0–28193–00	PLUG, WATER CHECK TAPON DE CONTROL DE LA AGUA	1	1	1			AP D:12.5MM AP D:12.5MM

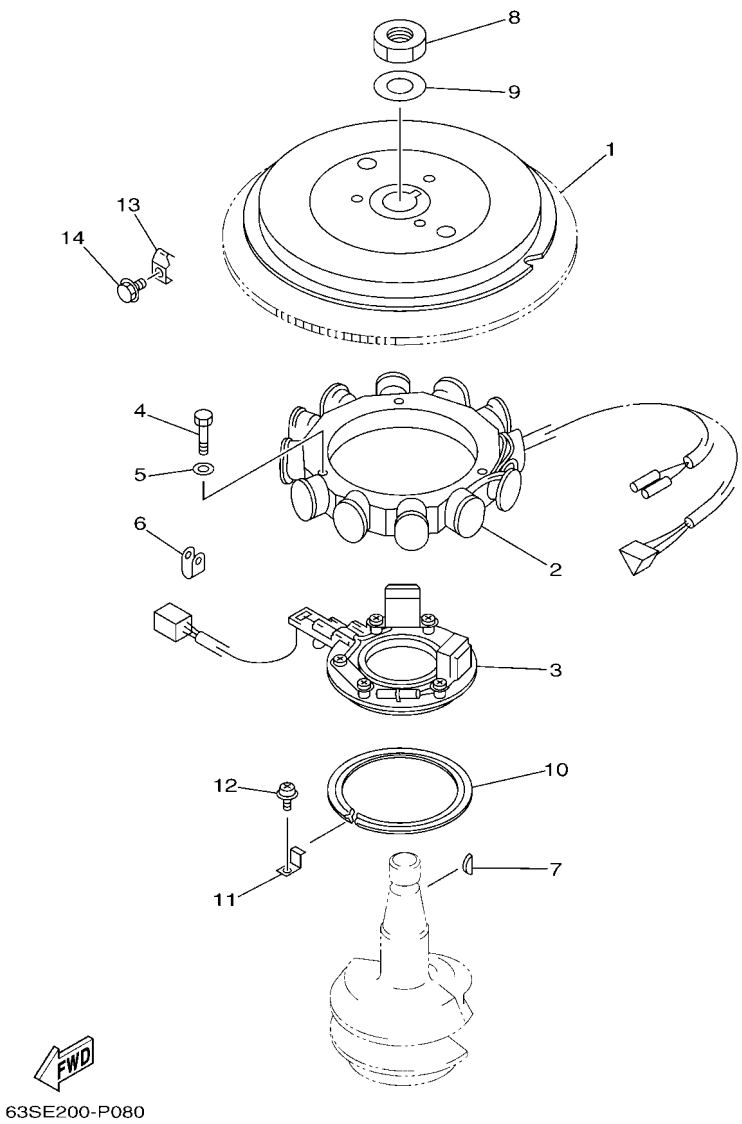

FIG. 8 GENERATOR GENERADOR

REF. NO.	PART NO. CODIGO Nº	DESCRIPTION DESCRIPCION	ET	ED	EHD			REMARKS OBSERVACIONES
1	688–85550–00	ROTOR ASSY ROTOR COMPLETO	1	1	1			
2	688–85510–01	STATOR ASSY ESTATOR COMPLETO	1	1	1			
3	688–85580–00	COIL, PULSER BOBINA DE PULSACION	1	1	1			
4	97013–06030	BOLT PERNO	3	3	3			
5	92903–06600	WASHER, PLATE RONDANA SENCILLA	3	3	3			
6	90464–12M00	CLAMP BRIDA	1	1	1			
7	90280–05015	KEY, WOODRUFF CUNA WOODRUFF	1	1	1			
8	90170–20137	NUT TUERCA	1	1	1			
9	90201–21M18	WASHER, PLATE ARANDELA PLANA	1	1	1			
10	688–41611–00	RETAINER, MAGNETO BASE RETENEDOR BASE MAGNETO	1	1	1			
11	688–41612–00	RETAINER, MAGNETO BASE RETENEDOR BASE MAGNETO	3	3	3			
12	90159–06M31	SCREW, WITH WASHER TORNILLO CON VALONA	3	3	3			
13	688–81332–01	PLATE, TIMING PLACA REGULADOR DE TIEMPO	1	1	1			
14	97595–06510	BOLT, WITH WASHER PERNO CON ARANDELA	1	1	1			

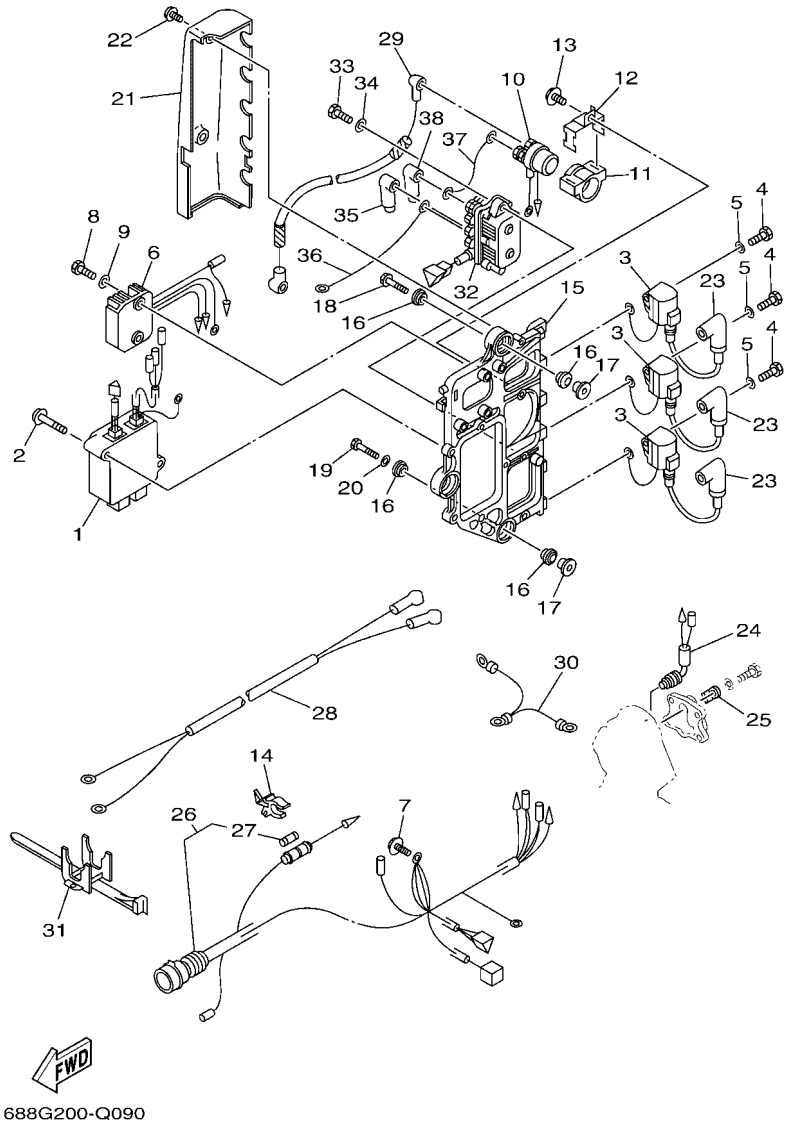

FIG. 9 ELECTRICAL 1 — EQUIPO ELECTRICO 1

REF. NO.	PART NO. CODIGO Nº	DESCRIPTION DESCRIPCION	ET	ED	EHD			REMARKS OBSERVACIONES
1	688–85540–00	C.D.I. UNIT ASSY UNIDAD C.D.I. COMPLETA	1	1	1			
2	97980–06340	SCREW, WITH WASHER TORNILLO, CON ARANDELA	2	2	2			
3	697–85570–00	IGNITION COIL ASSY BOBINA DE IGNICION COMPLETO	3	3	3			
4	97095–06020	BOLT PERNO	3	3	3			
5	92995–06600	WASHER ARANDELA	3	3	3			
6	6H0–81960–00	RECTIFIER & REGULATOR ASSY RECTIFICADOR Y REGULADOR	1	1	1			
7	97595–06512	BOLT, WITH WASHER PERNO CON ARANDELA	1	1	1			
8	97095–06020	BOLT PERNO	2	2	2			
9	92995–06600	WASHER ARANDELA	2	2	2			
10	6G1–81941–10	STARTER RELAY ASSY RELE DE ARRANQUE	1	1	1			
11	6G1–81952–00	HOLDER, RELAY SOSTEN DE RELE	1	1	1			
12	6E9–81945–70	PLATE, SWITCH FITTING PLACA ACCESORIA DE INTERRUP.	1	1	1			
13	97513–06516	BOLT, WITH WASHER PERNO CON ARANDELA	1	1	1			
14	6G5–82152–00	HOLDER, FUSE PORTA-FUSIBLES	1	1	1			
15	688–85542–10	BRACKET SOPORTE	1	1	1			
16	90480–09M25	GROMMET TAPON	6	6	6			
17	90387–06M03	COLLAR ESPACIADOR	3	3	3			
18	90119–06M75	BOLT, WITH WASHER TORNILLO CON ARANDELA	2	2	2			
19	90109–06M39	BOLT PERNO	1	1	1			
20	90201–06M31	WASHER, PLATE ARANDELA PLANA	1	1	1			
21	6H1–81916–00	COVER, TERMINAL CUBIERTA DE TERMINAL	1	1	1			
22	90159–06M11	SCREW, WITH WASHER TORNILLO CON VALONA	2	2	2			
23	663–82370–01	PLUG CAP ASSY TAPON DE BUJIA COMPLT	3	3	3			
	6G1–82370–21	PLUG CAP ASSY TAPON DE BUJIA COMPLT	3		3			85A-FOR CAR(CE) 85A-FOR CAR(CE)
24	688–82560–10	THERMO SWITCH ASSY INTER. DE TERMO	1	1	1			
25	688–82588–01	PLATE PLACA	1	1	1			
26	688–82590–17	WIRE HARNESS ASSY (10P) CONJUNTO DE CABLES (10P)	1					

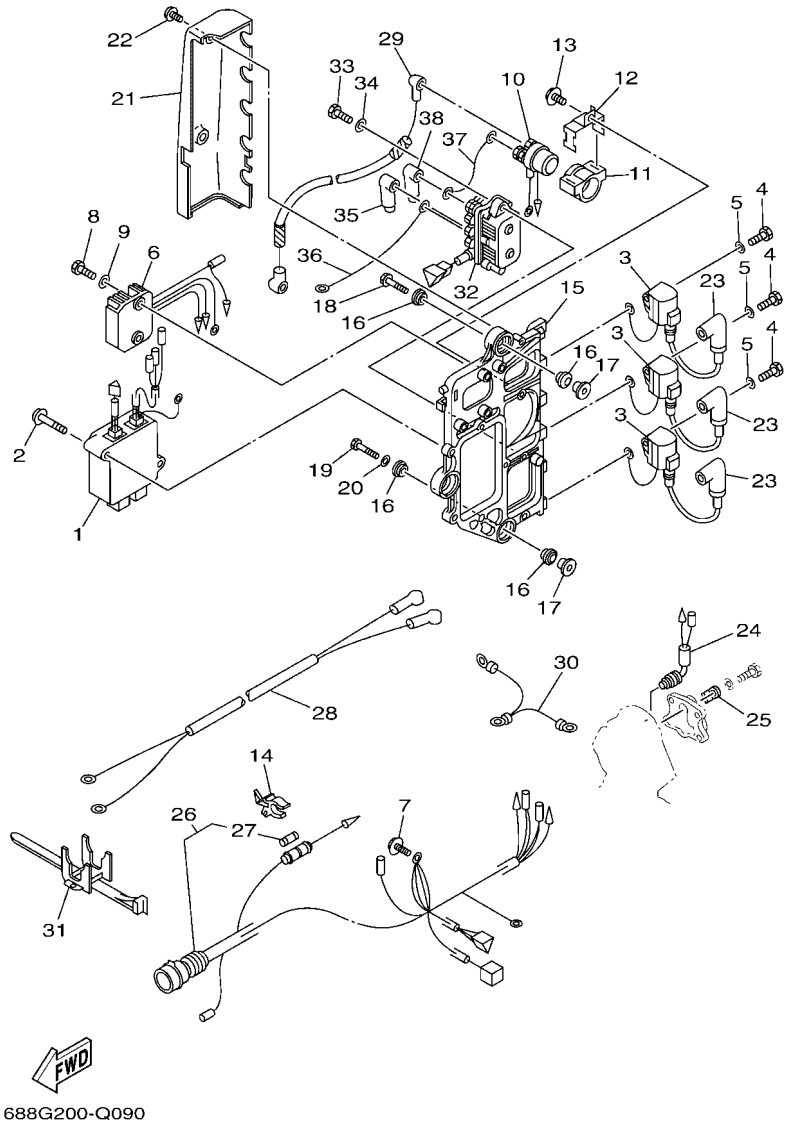

FIG. 9 ELECTRICAL 1 — EQUIPO ELECTRICO 1

REF. NO.	PART NO. CODIGO Nº	DESCRIPTION DESCRIPCION	ET	ED	EHD			REMARKS OBSERVACIONES
26	688–82590–04	WIRE HARNESS ASSY (7P) CONJUNTO DE CABLES (7P)		1				
	688–82590–30	WIRE HARNESS ASSY (10P) CONJUNTO DE CABLES (10P)			1			
27	663–82151–00	.FUSE (12V-20A) .FUSIBLE (12V-20A)	1	1	1			
28	6H0–82105–03	BATTERY CABLE CABLE DE BATERIA	1	1	1			
29	6H0–82117–00	WIRE, LEAD CABLE CONDUCTOR	1	1	1			
30	697–82519–00	WIRE, EARTH LEAD CABLE CONDUCTOR A TIERRA	1	1	1			
31	688–82594–00	CLAMP GRAMPA	1	1	1			
32	61A–81950–00	RELAY ASSY RELE COMPLETO	1					
33	97095–06025	BOLT PERNO	2					
34	92995–06600	WASHER ARANDELA	2					
35	682–82119–01	COVER, LEAD WIRE CUBIERTA DE CABLE CONDUCTOR	2					
36	6H0–81949–10	WIRE, LEAD CABLE CONDUCTOR	1					
37	6H0–81949–01	WIRE, LEAD CABLE CONDUCTOR	1					
38	682–82119–01	COVER, LEAD WIRE CUBIERTA DE CABLE CONDUCTOR	1					

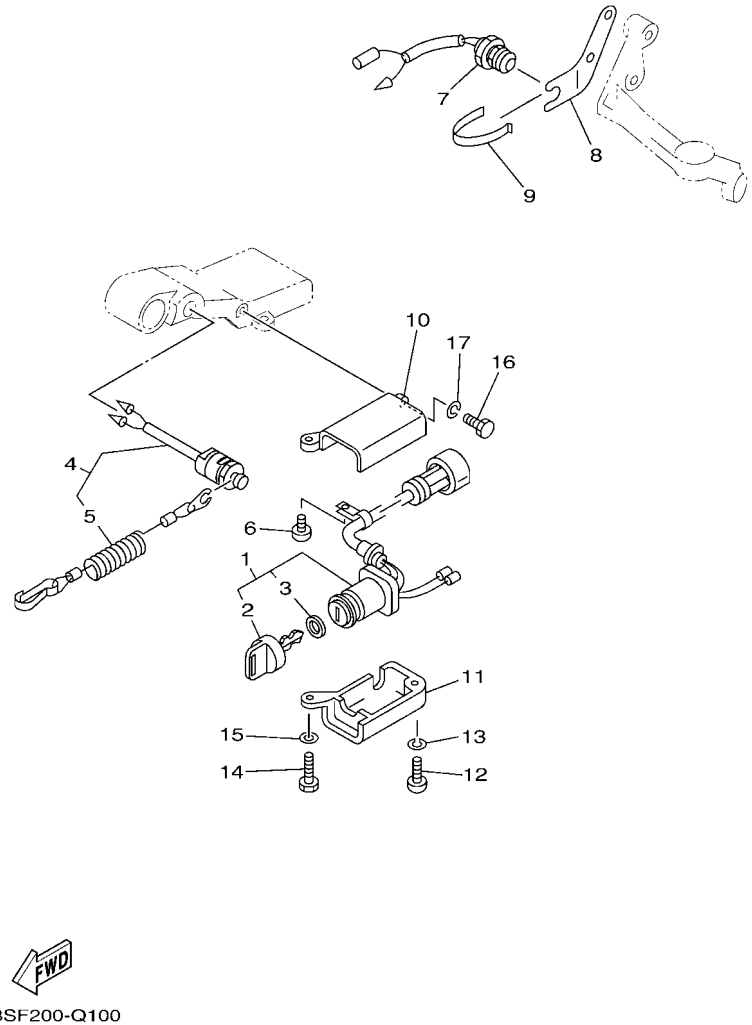

63SF200-Q100

FIG. 10 ELECTRICAL 2 — EQUIPO ELECTRICO 2

REF. NO.	PART NO. CODIGO Nº	DESCRIPTION DESCRIPCION	ET	ED	EHD			REMARKS OBSERVACIONES
1	6H3–82510–21	MAIN SWITCH ASSY CONJUNTO DE LLAVE IGNICION			1			
2	676–82577–01	.CAP, KEY .TAPA			1			
3	703–82532–00	.CAP .TAPA			1			
4	688–82575–12	ENGINE STOP SWITCH ASSY INTERRUPTOR DE PARADA COMPL			1			
5	682–82556–00	.LANYARD, STOP SWITCH .CORDON DE INTERRUPTOR PARADA			1			
6	97885–06012	SCREW, PAN HEAD TORNILLO A MUESCA			1			
7	688–82540–12	NEUTRAL SWITCH ASSY INTERRUPTOR NEUTRAL COMPL			1			
8	663–82554–01	STAY, NEUTRAL SWITCH SOPORTE INTERRUPTOR DE NEUTRAL			1			
9	663–82555–01	DAMPER, MAIN SWITCH 1 AMORT.DE INTER.PPAL.1			1			
10	697–8252E–02–8D	COVER, MAIN SWITCH 1 CUBIELA INTERRUPTOR PRINC.1			1			
11	697–8252F–02–8D	COVER, MAIN SWITCH 2 CUBIELA INTERRUPTOR PRINC.2			1			
12	97880–06025	SCREW, PAN HEAD TORNILLO DE CABEZA CON PLANA			1			
13	92990–06100	WASHER, SPRING ARANDELA PLANA			1			
14	97013–06030	BOLT PERNO			1			
15	92903–06600	WASHER, PLATE RONDANA SENCILLA			1			
16	97013–06020	BOLT PERNO			1			
17	92903–06100	WASHER, SPRING RONDANA SENCILLA			1			

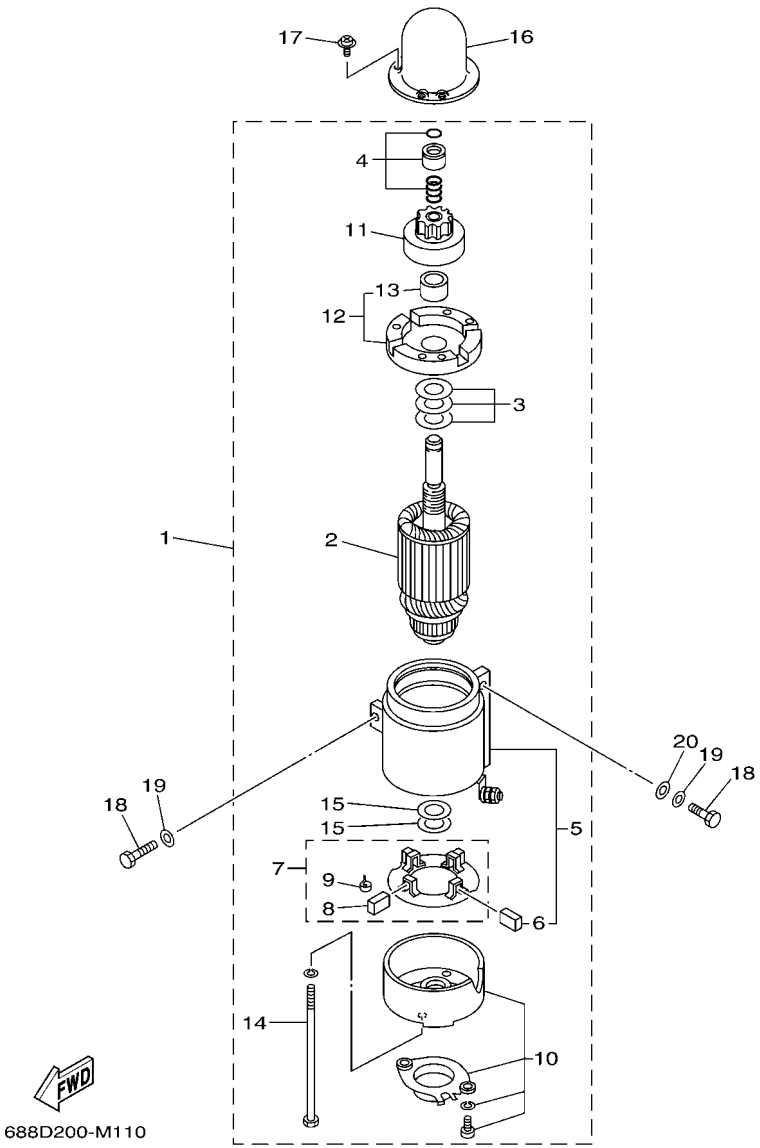

FIG. 11 STARTING MOTOR — MOTOR DE ARRANQUE

REF. NO.	PART NO. CODIGO Nº	DESCRIPTION DESCRIPCION	ET	ED	EHD			REMARKS OBSERVACIONES
1	688–81800–12	STARTING MOTOR ASSY MOTOR DE ARRANQUE COMPLETO	1	1	1			
2	676–81850–11	.ARMATURE ASSY .INDUCIDO COMPLETO	1	1	1			
3	676–81809–10	.WASHER KIT .JUEGO DE ARANDELA	1	1	1			
4	676–81857–10	.PINION STOPPER SET .JUEGO TAPON PINON	1	1	1			
5	688–81810–11	.STATOR ASSY .ESTATOR COMPLETO	1	1	1			
6	663–81811–11	..BRUSH 1 ..ESCOBILLA 1	2	2	2			
7	663–81840–11	.BRUSH HOLDER ASSY .SOSTEN DE ESCOBILLA COMPLETO	1	1	1			
8	663–81812–11	..BRUSH 2 ..ESCOBILLA 2	2	2	2			
9	663–81813–10	..SPRING, BRUSH ..RESORTE DE ESCOBILLA	4	4	4			
10	663–81820–12	.REAR BRACKET ASSY .CUBIERTA TRASERA COMPL	1	1	1			
11	663–81832–11	.PINION ASSY .PINON COMPL.	1	1	1			
12	688–81830–11	.FRONT BRACKET ASSY .SOPORTE DELANTERO COMPLETO	1	1	1			
13	688–81831–00	..METAL, FRONT ..METAL, DELANTERO	1	1	1			
14	663–81826–10	.BOLT .PERNO	2	2	2			
15	688–81824–10	.WASHER 2 .ARANDELA 2	2	2	2			
16	688–81842–00	COVER TAPA	1	1	1			
17	97980–04210	SCREW, WITH WASHER TORNILLO, CON ARANDELA	3	3	3			
18	97013–08030	BOLT PERNO	3	3	3			
19	92903–08600	WASHER, PLATE RONDANA SENCILLA	3	3	3			
20	92990–08600	WASHER, PLATE ARANDELA PLANA	2	2	2			

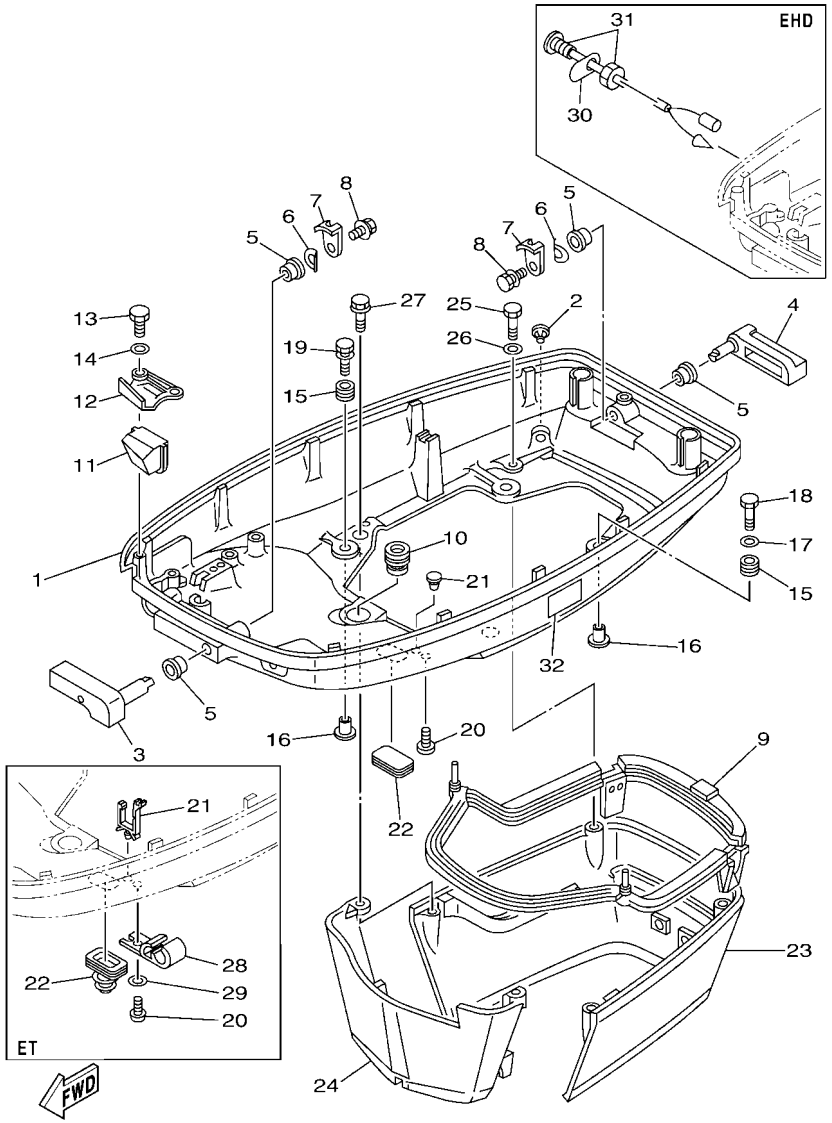

FIG. 12 BOTTOM COWLING — CUBIERTA INFERIOR

REF. NO.	PART NO. CODIGO Nº	DESCRIPTION DESCRIPCION	ET	ED	EHD			REMARKS OBSERVACIONES
1	688–42711–05–8D	COWLING, BOTTOM 1 CUBIERTA INFERIOR 1	1	1				
	692–42711–03–8D	COWLING, BOTTOM 1 CUBIERTA INFERIOR 1			1			
2	6BL–44391–00	NIPPLE, HOSE NIPLE MANGUERA	1	1	1			
3	688–42815–01–8D	LEVER, CLAMP PALANCA ABRAZADERA	1	1	1			
4	688–42817–01–8D	LEVER, CLAMP PALANCA ABRAZADERA	1	1	1			
5	90386–13M38	BUSH BUJE	4	4	4			
6	90206–13019	WASHER, WAVE ARANDELA ONDULADA	2	2	2			
7	688–42816–00	LEVER, CLAMP PALANCA ABRAZADERA	2	2	2			
8	90119–06M09	BOLT, WITH WASHER TORNILLO CON ARANDELA	2	2	2			
9	688–42716–02	RUBBER, SEAL 1 SELLO DE GOMA 1	1	1	1			
10	663–42724–00	GROMMET TAPON	1	1	1			
11	688–42725–10	GROMMET TAPON	1					
	688–42725–02	GROMMET TAPON		1				
	692–42725–00	GROMMET TAPON			1			
12	688–42738–01–8D	PLATE, FITTING PLACA DE AJUSTE	1	1	1			
13	97095–06016	BOLT PERNO	2	2	2			
14	92995–06600	WASHER ARANDELA	2	2	2			
15	6BG–42748–00	GROMMET TAPON	4	4	4			
16	90387–06M69	COLLAR ESPACIADOR	4	4	4			
17	90201–06416	WASHER, PLATE ARANDELA PLANA	1	1	1			
18	97095–06030	BOLT PERNO	1	1	1			
19	90119–06M61	BOLT, WITH WASHER TORNILLO CON ARANDELA	3	3	3			
20	90157–06M01	SCREW, PAN HEAD TORNILLO CABEZA CONICA PLANA	1					
	90338–05M03	PLUG TAPON		1	1			
21	90464–16021	CLAMP BRIDA	1					
	703–82119–00	COVER, LEAD WIRE CUBIERTA DE CABLE CONDUCTOR		1	1			
22	688–42726–10	GROMMET TAPON	1					

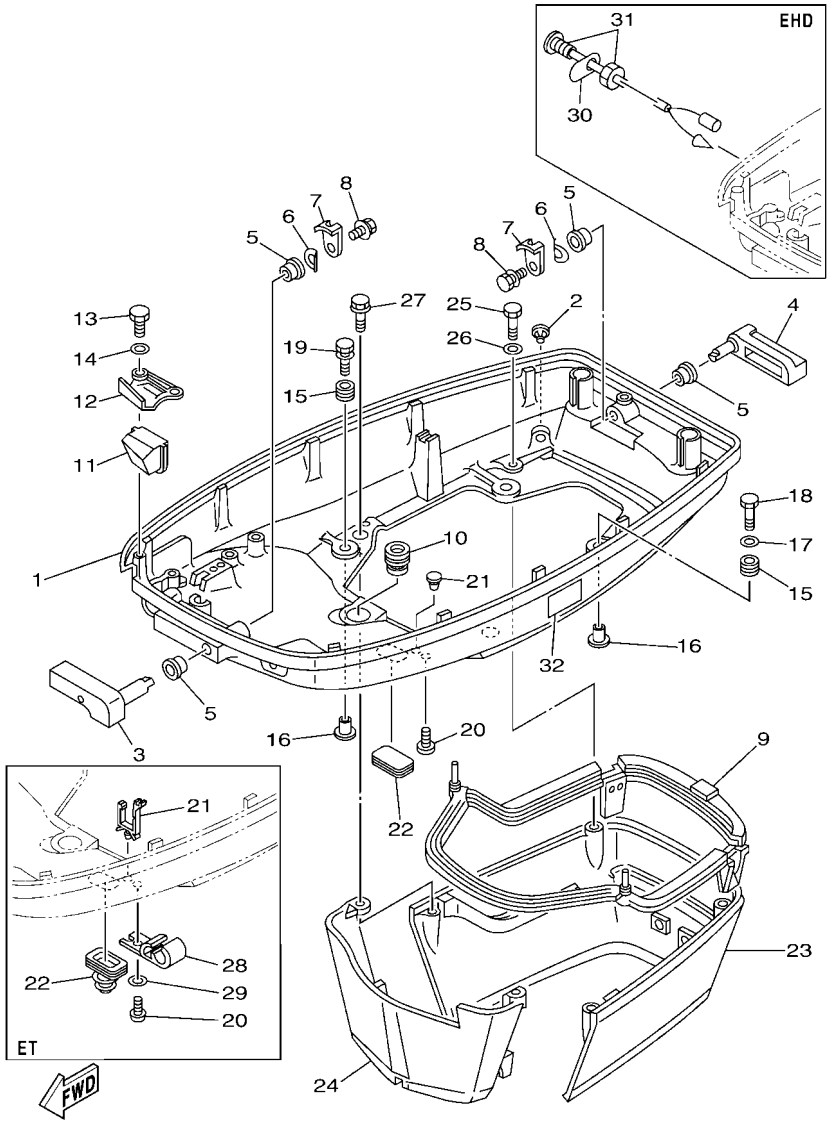

688G200-Q120

FIG. 12 BOTTOM COWLING — CUBIERTA INFERIOR

REF. NO.	PART NO. CODIGO Nº	DESCRIPTION DESCRIPCION	ET	ED	EHD			REMARKS OBSERVACIONES
22	6H4–42726–00	GROMMET TAPON		1	1			
23	688–42741–01–8D	APRON MANDIL	1	1	1			
24	688–42771–01–8D	APRON MANDIL	1	1	1			
25	97095–06020	BOLT PERNO	2	2	2			
26	92995–06600	WASHER ARANDELA	2	2	2			
27	97595–06530	BOLT, WITH WASHER PERNO CON ARANDELA	2	2	2			
28	6E5–24367–01	CLAMP, FUEL PIPE 2 GRAMPA DE TUBO DE COMBUST.2	1					
29	92990–06600	WASHER, PLATE ARANDELA PLANA	1					
30	692–85415–00	MARK, SIGNAL LAMP MARCO DE FOCO DE SENAL			1			
31	6H4–85411–00	OVERHEAT WARNING LAMP CALENTAR DEMASIADO DEL ALARMA			1			
32	6EE–42794–40	LABEL, WARNING (GENERAL) ETIQUETA DE PRECAUCION	1	1	1			

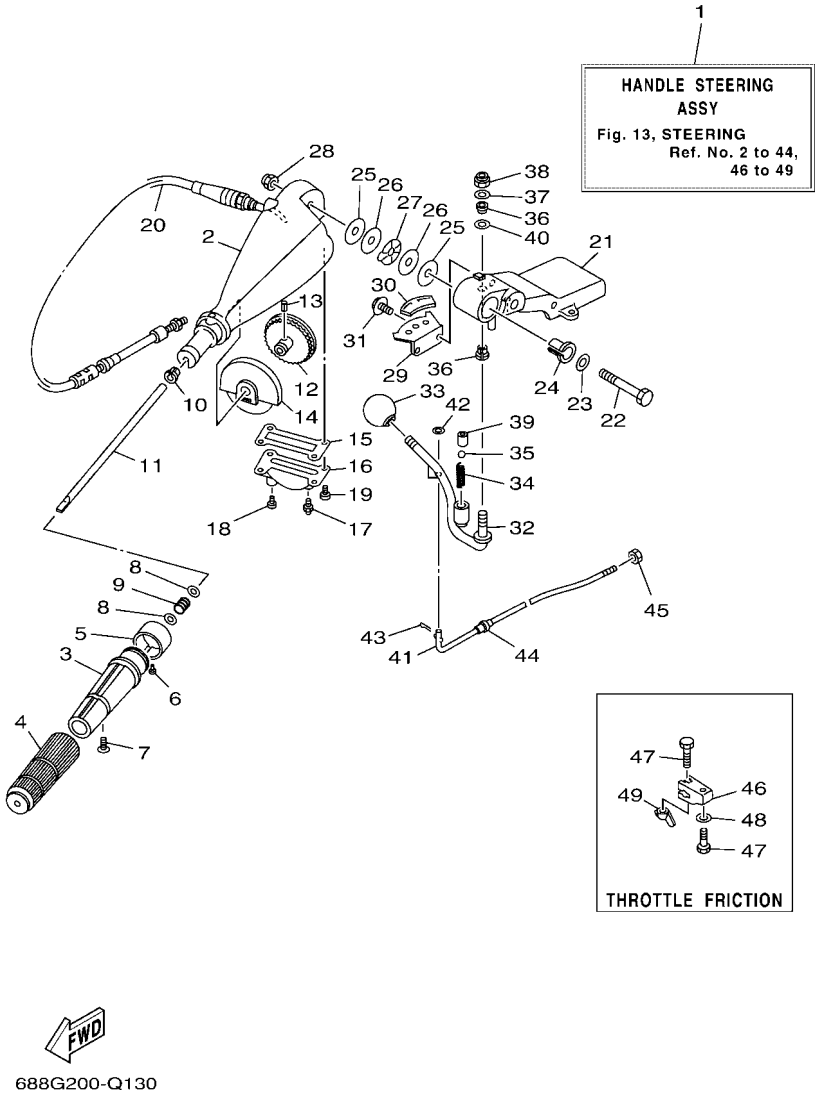

FIG. 13 STEERING — DIRECCION

REF. NO.	PART NO. CODIGO Nº	DESCRIPTION DESCRIPCION	ET	ED	EHD			REMARKS OBSERVACIONES
1	692–W0084–11–8D	HANDLE STEERING ASSY CONJUNTO DE MANIJA			1			
2	692–42111–12–8D	HANDLE, STEERING MANIJA DE DIRECCION			1			
3	664–42119–00	GRIP, STEERING HANDLE MANGO, MANIJA DE DIRRECCION			1			
4	6G1–42177–00	RUBBER, HANDLE HULE DE MANIJA			1			
5	692–42137–02	INDICATOR, THROTTLE INDICADOR ACELERADOR			1			
6	90269–02M09	RIVET REMACHE			1			
7	90152–05011	SCREW, COUNTERSUNK TORNILLO EMBUTIDO			1			
8	90201–10M02	WASHER, PLATE ARANDELA PLANA			2			
9	90501–23215	SPRING, COMPRESSION RESORTE DE COMPRESION			1			
10	90386–08032	BUSH BUJE			1			
11	692–42115–00	SHAFT, STEERING HANDLE EJE MANIJA DE DIRECCION			1			
12	663–42138–00	LEVER, THROTTLE PLANCA DE ACELERACION			1			
13	90254–03003	PIN, SPRING PASADOR DE TIPO A RESORTE			1			
14	692–42135–00	HOUSING, THROTTLE LEVER CAJA PALANCA ACELERADOR			1			
15	663–42133–01	GASKET EMPAQUE			1			
16	692–42134–03–8D	COVER, THROTTLE LEVER CUBIERTA PALANCA ACELERADOR			1			
17	93700–06M03	NIPPLE, GREASE BOQUILLA DE ENGRASAR			1			
18	97885–06008	SCREW, PAN HEAD TORNILLO A MUESCA			1			
19	97885–05012	SCREW, PAN HEAD TORNILLO A MUESCA			4			
20	692–26301–03	THROTTLE CABLE ASSY CABLE DE ACELERADOR COMPLETO			1			
21	692–42121–02–8D	BRACKET SOPORTE			1			
22	90101–12M06	BOLT TORNILLO			1			
23	92990–12200	WASHER, PLAIN ARANDELA PLANA			1			
24	90386–12089	BUSH BUJE			1			
25	90202–12092	WASHER, PLATE ARANDELA DE PLANA			2			
26	90201–12537	WASHER, PLATE ARANDELA PLANA			2			
27	90206–12054	WASHER, WAVE ARANDELA ONDULADA			1			

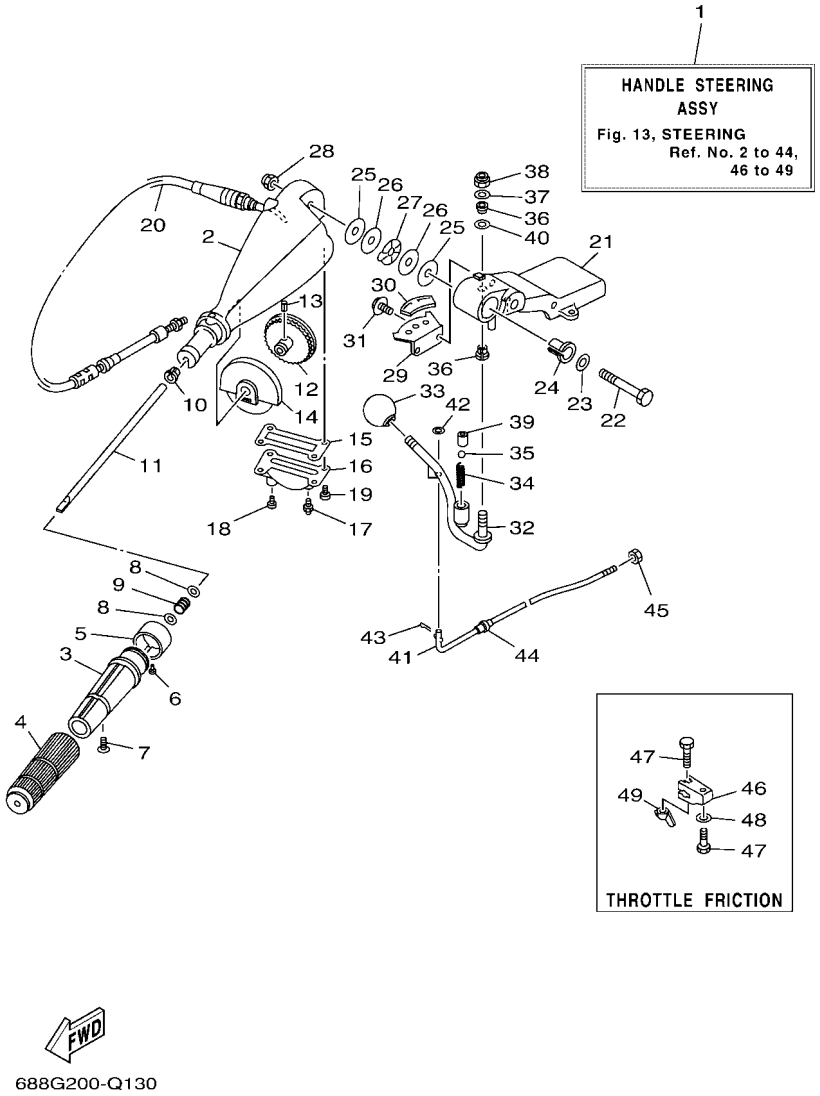

FIG. 13 STEERING — DIRECCION

REF. NO.	PART NO. CODIGO Nº	DESCRIPTION DESCRIPCION	ET	ED	EHD			REMARKS OBSERVACIONES
28	90185–12058	NUT, SELF-LOCKING TUERCA AUTOBLOCANTE			1			
29	697–44113–00	CAM PLATE, HANDLE PLACA DE LA LEVA DEL MANGO			1			
30	6K5–44191–00	INDICATOR, SHIFT INDICADOR DE CAMBIOS			1			
31	97513–06516	BOLT, WITH WASHER PERNO CON ARANDELA			2			
32	692–44159–01	HANDLE, GEAR SHIFT MANIJA DE CAMBIO DE MARCHAS			1			
33	663–44173–00	LEVER, SHIFT CONTROL PALANCA CONTROL CAMBIOS			1			
34	90501–16M17	SPRING, COMPRESSION RESORTE DE COMPRESION			1			
35	93515–32M01	BALL ESFERA			1			
36	90386–10009	BUSH BUJE			2			
37	90201–10120	WASHER, PLATE ARANDELA PLANA			1			
38	90185–10027	NUT, SELF-LOCKING TUERCA AUTOBLOCANTE			1			
39	90387–12M30	COLLAR ESPACIADOR			1			
40	90201–12M34	WASHER, PLATE ARANDELA PLANA			1			
41	692–42164–00	ROD, MANUAL SHIFT VARILLA DE CAMBIOS MANUAL			1			
42	92990–06600	WASHER, PLATE ARANDELA PLANA			1			
43	91490–25012	PIN. COTTER CHAVETA			1			
44	90386–06088	BUSH BUJE			1			
45	700–48339–00	NUT, CABLE END TUERCA TERMINAL			1			
46	663–42126–01	FRICTION, STEERING HANDLE GRIP FRICCION DE MANGO DIRECCION			1			
47	90101–06M27	BOLT TORNILLO			2			
48	92990–06600	WASHER, PLATE ARANDELA PLANA			1			
49	90175–06003	NUT, WING TUERCA MARIPOSA			1			

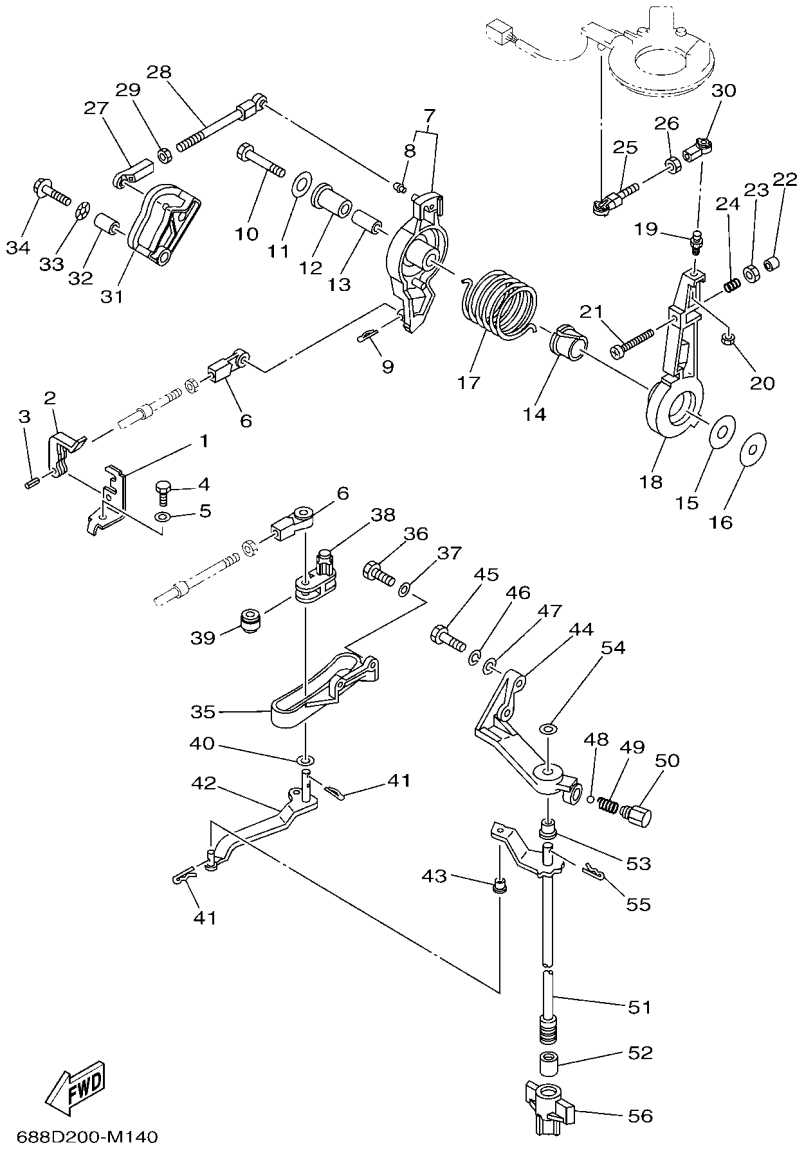

FIG. 14 CONTROL

REF. NO.	PART NO. CODIGO Nº	DESCRIPTION DESCRIPCION	ET	ED	EHD			REMARKS OBSERVACIONES
1	663–48531–00	BRACKET, REMOTE CONTROL SOPORTE DE CONTROL REMOTO	1	1	1			
2	663–48538–00	CLAMP, CABLE 1 GRAMPA DE CABLE	1	1	1			
3	91690–30012	PIN, SPRING PASADOR DE RESORTE	1	1	1			
4	97095–08016	BOLT PERNO	1	1	1			
5	92995–08600	WASHER ARANDELA	1	1	1			
6	663–48344–00	CABLE END, REMOTE CONTROL BASE CONTROL	2	2	2			
7	688–41632–01–1S	LEVER, MAGNETO CONTROL PALANCA DE CONTROL DE MAGNETO	1	1	1			
8	662–41214–01	.JOINT 1 .CONECTOR	1	1	1			
9	90468–18008	CLIP PRESILLA	1	1	1			
10	97095–08045	BOLT PERNO	1	1	1			
11	90201–08M23	WASHER, PLATE ARANDELA PLANA	1	1	1			
12	90386–12089	BUSH BUJE	1	1	1			
13	90387–08M16	COLLAR ESPACIADOR	1	1	1			
14	90386–22M13	BUSH BUJE	1	1	1			
15	90202–12092	WASHER, PLATE ARANDELA DE PLANA	1	1	1			
16	90201–08M13	WASHER, PLATE ARANDELA PLANA	1	1	1			
17	90508–29M05	SPRING, TORSION RESORTE DE TORSION	1	1	1			
18	688–41631–01–1S	LEVER, MAGNETO CONTROL PALANCA DE CONTROL DE MAGNETO	1	1	1			
19	663–85518–00	JOINT, BALL CONECTOR	1	1	1			
20	95303–05700	NUT TUERCA	1	1	1			
21	90157–06013	SCREW, PAN HEAD TORNILLO CABEZA CONICA PLANA	1	1	1			
22	688–44194–00	CAP TAPA	1	1	1			
23	95303–06600	NUT TUERCA	1	1	1			
24	90501–16M12	SPRING, COMPRESSION RESORTE DE COMPRESION	1	1	1			
25	682–41237–50	JOINT, LINK CONECTOR	1	1	1			
26	95380–05600	NUT TUERCA	1	1	1			
27	682–41237–00	JOINT, LINK CONECTOR	1	1	1			

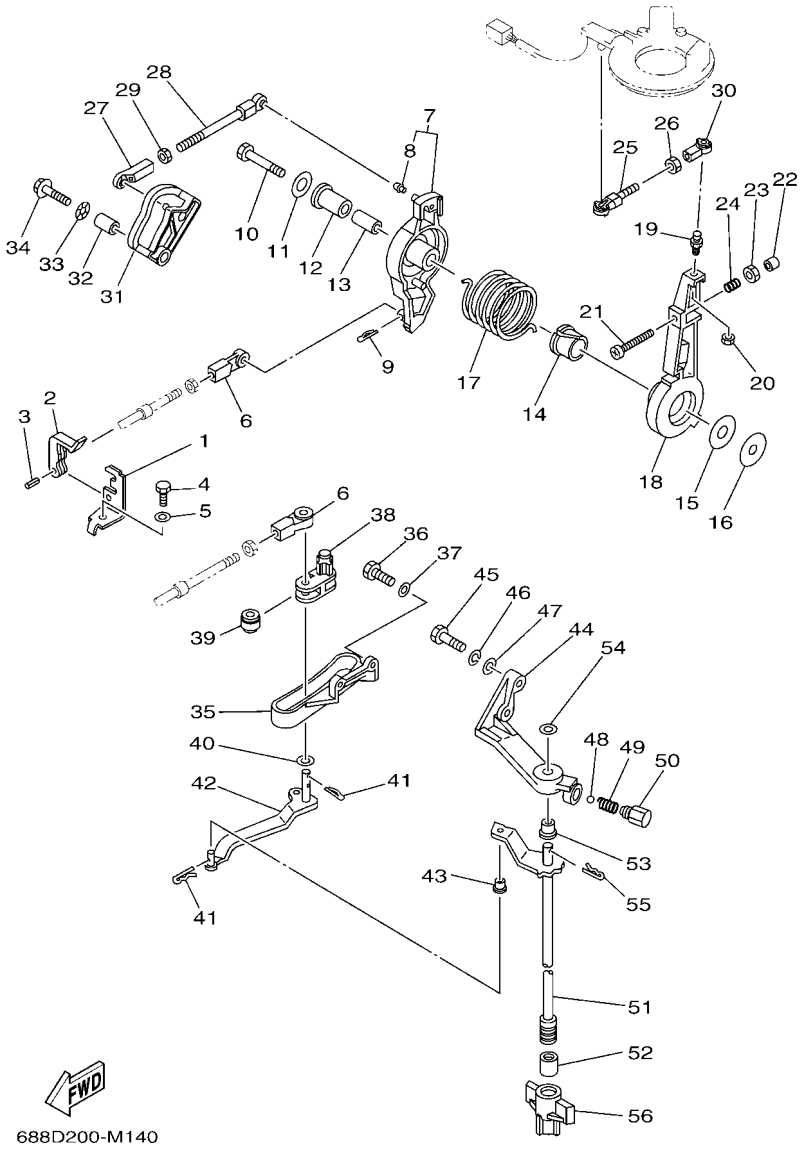

FIG. 14 CONTROL

REF. NO.	PART NO. CODIGO Nº	DESCRIPTION DESCRIPCION	ET	ED	EHD			REMARKS OBSERVACIONES
28	688–41211–01	LINK, ACCEL. ESLABON, ACELERADOR	1	1	1			
29	95380–05600	NUT TUERCA	1	1	1			
30	682–41237–00	JOINT, LINK CONECTOR	1	1	1			
31	688–41213–01	CAM, ACCEL. LEVA ACELERADOR	1	1	1			
32	90387–06M17	COLLAR ESPACIADOR	1	1	1			
33	90206–10M04	WASHER, WAVE ARANDELA ONDULADA	1	1	1			
34	90119–06M24	BOLT, WITH WASHER TORNILLO CON ARANDELA	1	1	1			
35	688–44117–00–94	BRACKET SOPORTE	1	1	1			
36	97013–06020	BOLT PERNO	2	2	2			
37	92903–06600	WASHER, PLATE RONDANA SENCILLA	2	2	2			
38	688–44124–00	LINK, SHIFT ROD ESLABON	1	1	1			
39	688–44122–00	BUSHING, SHIFT ROD LEVER BUJE PALANCA VARILLA DE CAMBIO	1	1	1			
40	90202–07M07	WASHER, PLATE ARANDELA DE PLANA	1	1	1			
41	90468–18008	CLIP PRESILLA	3	3	3			
42	688–44121–02	LEVER, SHIFT ROD PALANCA VARILLA CAMBIOS	1	1	1			EXCEPT 85A-MYS,KOR EXCEPT 85A-MYS,KOR
	6H1–44121–00	LEVER, SHIFT ROD PALANCA VARILLA CAMBIOS	1		1			85A-MYS,KOR 85A-MYS,KOR
43	90386–06M12	BUSH BUJE	1	1	1			EXCEPT 85A-MYS,KOR EXCEPT 85A-MYS,KOR
44	688–44118–01–94	BRACKET SOPORTE	1	1	1			
45	97013–08030	BOLT PERNO	2	2	2			
46	92903–08100	WASHER, SPRING RONDANA SENCILLA	2	2	2			
47	92903–08600	WASHER, PLATE RONDANA SENCILLA	2	2	2			
48	93501–04M02	BALL BOLA	1	1	1			
49	90501–12082	SPRING, COMPRESSION RESORTE DE COMPRESION	1	1	1			
50	648–42715–00	BUSHING BUJE	1	1	1			
51	688–44120–13	HANDLE GEAR SHIFT ASSY MANIJA DE CAMBIO COMPL	1	1	1			L(20.5") L(20.5")
	6H1–44120–13	HANDLE GEAR SHIFT ASSY MANIJA DE CAMBIO COMPL	1		1			L(20.5") 85A-MYS,KOR L(20.5") 85A-MYS,KOR
	692–44120–33	HANDLE GEAR SHIFT ASSY MANIJA DE CAMBIO COMPL			1			Y(22.5") Y(22.5")

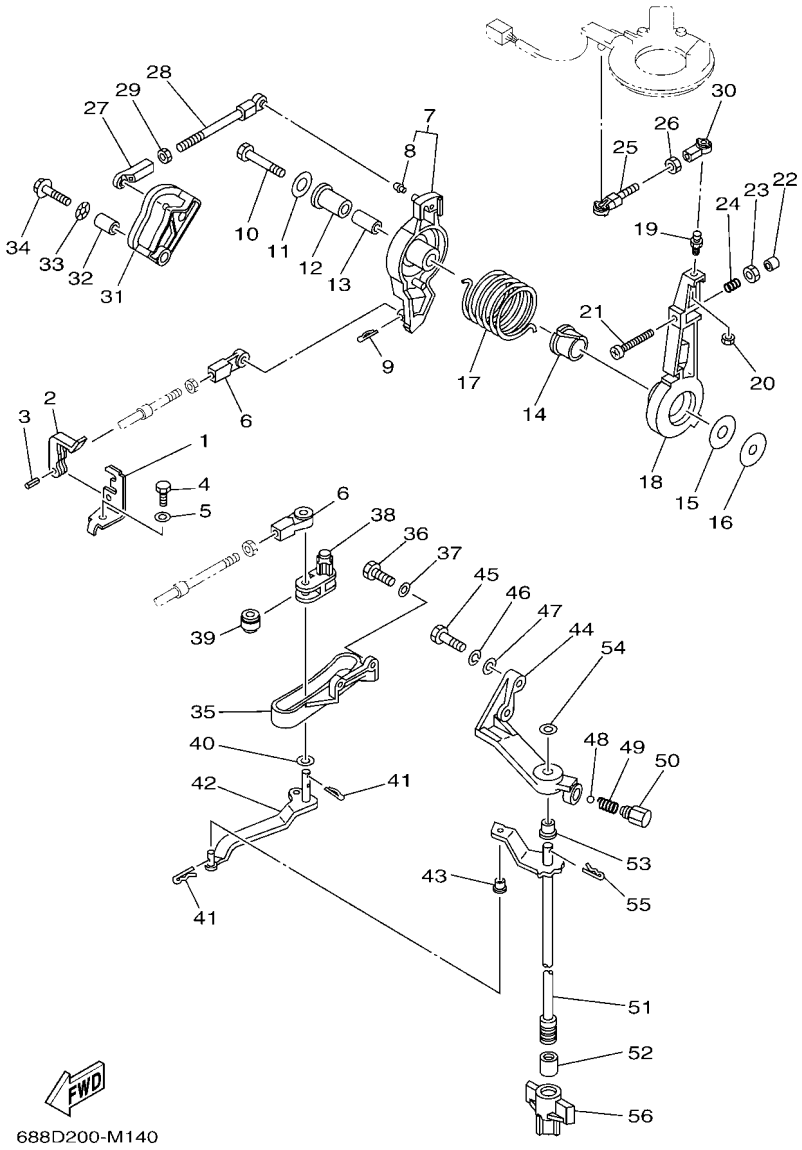

FIG. 14 CONTROL

REF. NO.	PART NO. CODIGO Nº	DESCRIPTION DESCRIPCION	ET	ED	EHD			REMARKS OBSERVACIONES
51	688–44120–23	HANDLE GEAR SHIFT ASSY MANIJA DE CAMBIO COMPL	1	1	1			X(25.5") X(25.5")
52	696–44147–00	BOOT, SHIFT ROD HULE DE VARILLA	1	1	1			EXCEPT 85A-MYS,KOR EXCEPT 85A-MYS,KOR
53	90386–08006	BUSH BUJE	1	1	1			EXCEPT 85A-MYS,KOR EXCEPT 85A-MYS,KOR
	90386–07M58	BUSH BUJE	1		1			85A-MYS,KOR 85A-MYS,KOR
54	92990–08200	WASHER, PLAIN ARANDELA PLANA	1	1	1			
55	90468–18008	CLIP PRESILLA	1	1	1			
56	697–43662–00	GUIDE, REVERSE ROD GUIA DE LA VARILLA DE REVERSE	1	1	1			EXCEPT 85A-MYS,KOR EXCEPT 85A-MYS,KOR

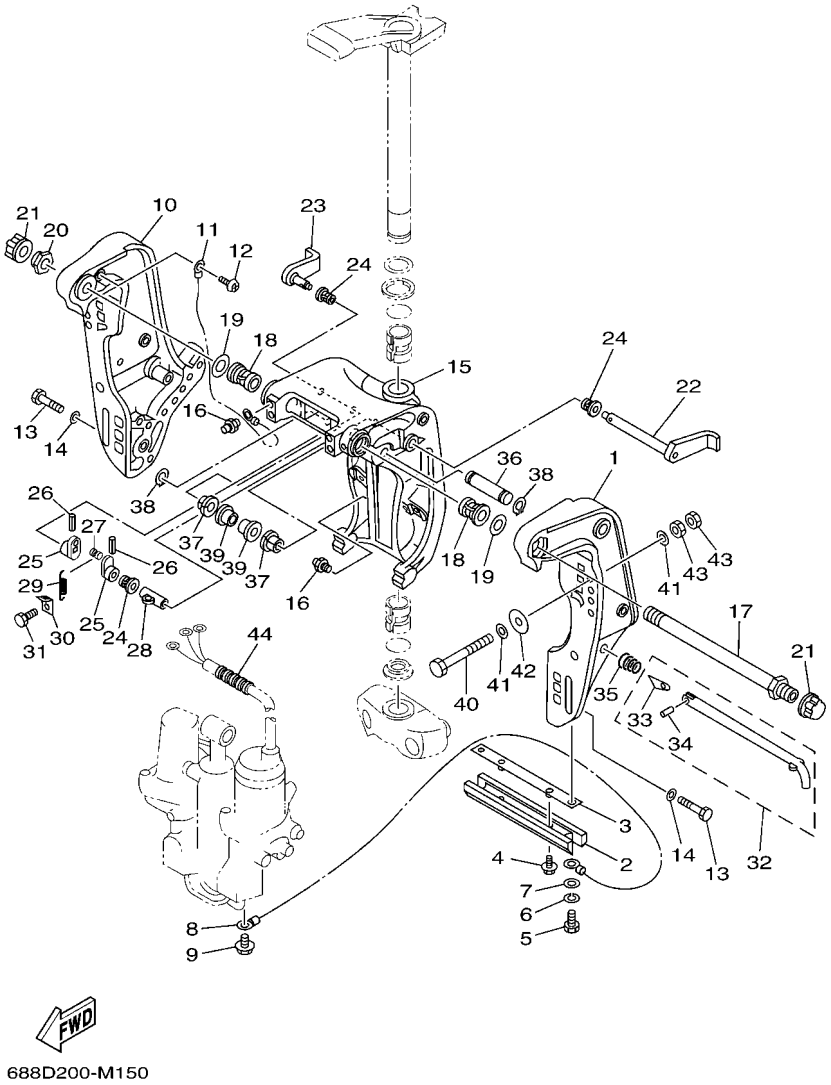

FIG. 15 BRACKET 1 — SOPORTE 1

REF. NO.	PART NO. CODIGO Nº	DESCRIPTION DESCRIPCION	ET	ED	EHD			REMARKS OBSERVACIONES
1	6H1–43111–01–8D	BRACKET, CLAMP 1 SOPORTE DE LA ABRAZADERA 1	1					
2	6H1–45251–03	ANODE CATODE	1					
3	6EK–44536–00	PLATE 2 PLACA 2	1					
4	90119–06M29	BOLT, WITH WASHER TORNILLO CON ARANDELA	2					
5	97095–06016	BOLT PERNO	2					
6	92995–06100	WASHER, SPRING ARANDELA	2					
7	92995–06600	WASHER ARANDELA	2					
8	6H1–82148–00	WIRE, LEAD 4 CABLE CONDUCTOR 4	1					
9	97595–06510	BOLT, WITH WASHER PERNO CON ARANDELA	1					
10	6H1–43112–00–8D	BRACKET, CLAMP 2 SOPORTE DE LA ABRAZADERA 2	1					
11	6E5–82148–00	WIRE, LEAD 4 CABLE CONDUCTOR 4	1					
12	97880–06012	SCREW, PAN HEAD TORNILLO DE CABEZA CON PLANA	1					
13	97095–10045	BOLT PERNO	6					
14	92995–10600	WASHER ARANDELA	6					
15	6H1–43311–02–8D	BRACKET, SWIVEL 1 SOPORTE GIRATORIO 1	1					
16	93700–06M03	NIPPLE, GREASE BOQUILLA DE ENGRASAR	3					
17	688–43131–03	BOLT, CLAMP BRACKET TORNILLO DE ABRAZADERA DEL SOP	1					
18	90386–22M15	BUSH BUJE	2					
19	90201–22M67	WASHER, PLATE ARANDELA PLANA	2					
20	90185–22M11	NUT, SELF-LOCKING TUERCA AUTOBLOCANTE	1					
21	6G5–43145–01	CAP, CLAMP BRACKET TAPA	2					
22	6H1–43181–01	LEVER, TILT STOP 1 PALANCA TOPE INCLINACION 1	1					
23	6H1–43185–01	LEVER, TILT STOP 2 PALANCA TOPE INCLINACION 2	1					
24	90386–10M16	BUSH BUJE	3					
25	6G5–43148–00	COLLAR, DISTANCE COLLAR	2					
26	91690–30020	PIN, SPRING PASADOR DE RESORTE	2					
27	90249–06M19	PIN PASADOR	1					

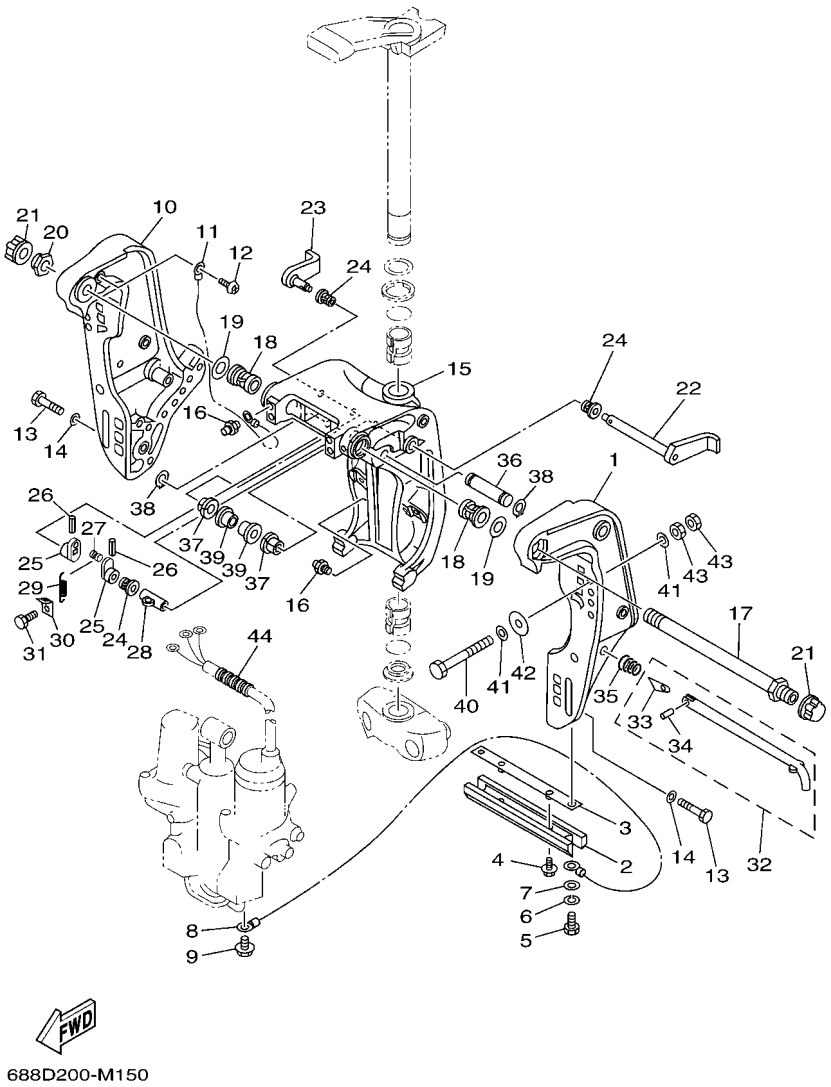

FIG. 15 BRACKET 1 — SOPORTE 1

REF. NO.	PART NO. CODIGO Nº	DESCRIPTION DESCRIPCION	ET	ED	EHD			REMARKS OBSERVACIONES
28	90387–10M02	COLLAR ESPACIADOR	1					
29	90506–14M24	SPRING, TENSION RESORTE DE TENSION	1					
30	6G5–43144–00	HOOK, SPRING GANCHO	1					
31	97095–06010	BOLT PERNO	1					
32	688–43160–01	TILT ROD ASSY VARILLA DE BASCULACION COMPL.	1					
33	688–43165–00	.PLATE, TILT LOCK .PLACA DE TOPE, VARILLA SEGURID	1					
34	91690–30012	.PIN, SPRING .PASADOR DE RESORTE	1					
35	90502–16M02	SPRING, CONICAL RESORTE CONICO	1					
36	6E5–43126–10	PIN, UPPER SHOCK MOUNT PASADOR DE AMORTIGUADOR SUPERI	1					
37	90386–18M35	BUSH BUJE	2					
38	93410–18M05	CIRCLIP SEGURO	2					
39	90386–18M63	BUSH BUJE	2					
40	90101–12M65	BOLT TORNILLO	4					
41	90201–12062	WASHER, PLATE ARANDELA PLANA	8					
42	90201–12426	WASHER, PLATE ARANDELA PLANA	4					
43	95380–12600	NUT TUERCA	8					
44	90440–14M00	PIPE TUBO	1					

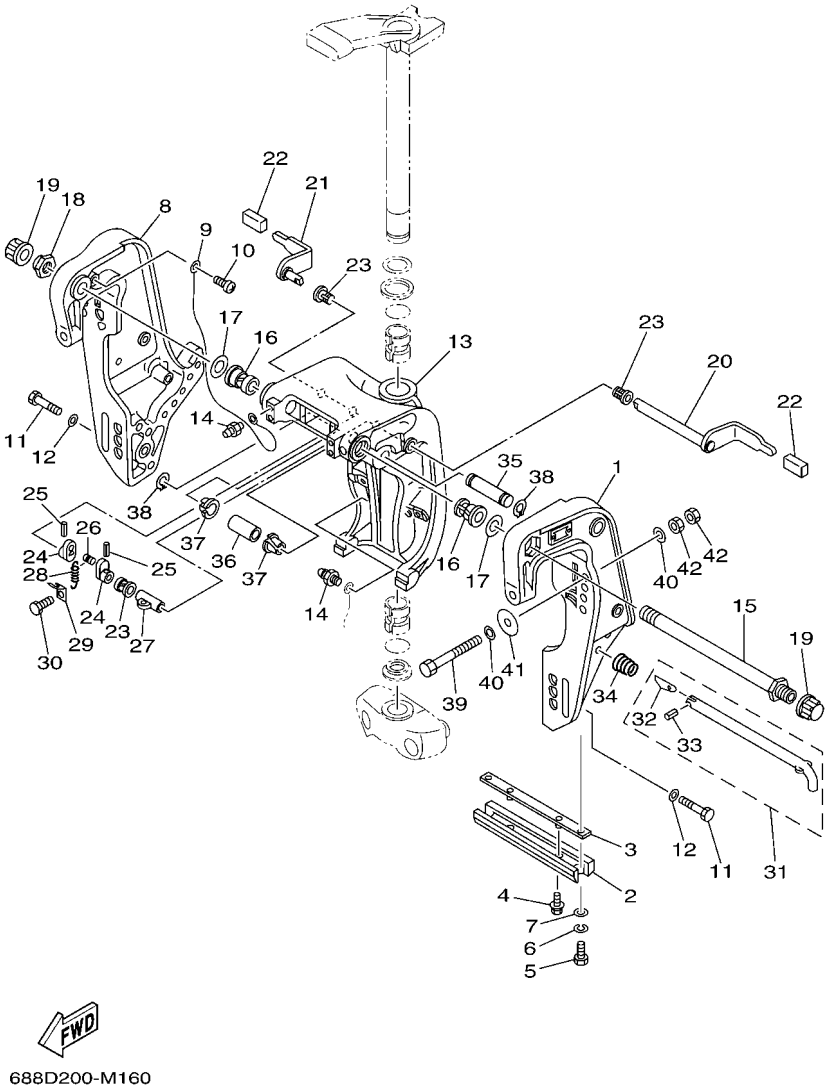

FIG. 16 BRACKET 2 — SOPORTE 2

REF. NO.	PART NO. CODIGO Nº	DESCRIPTION DESCRIPCION	ET	ED	EHD			REMARKS OBSERVACIONES
1	688–43111–13–8D	BRACKET, CLAMP 1 SOPORTE DE LA ABRAZADERA 1		1	1			
2	6H1–45251–03	ANODE CATODE		1	1			
3	6EK–44536–00	PLATE 2 PLACA 2		1	1			
4	90119–06M29	BOLT, WITH WASHER TORNILLO CON ARANDELA		2	2			
5	97095–06016	BOLT PERNO		2	2			
6	92995–06100	WASHER, SPRING ARANDELA		2	2			
7	92995–06600	WASHER ARANDELA		2	2			
8	688–43112–12–8D	BRACKET, CLAMP 2 SOPORTE DE LA ABRAZADERA 2		1	1			
9	6E5–82148–00	WIRE, LEAD 4 CABLE CONDUCTOR 4		1	1			
10	97880–06012	SCREW, PAN HEAD TORNILLO DE CABEZA CON PLANA		1	1			
11	97095–10045	BOLT PERNO		6	6			
12	92995–10600	WASHER ARANDELA		6	6			
13	6H1–43311–02–8D	BRACKET, SWIVEL 1 SOPORTE GIRATORIO 1		1	1			
14	93700–06M03	NIPPLE, GREASE BOQUILLA DE ENGRASAR		3	3			
15	688–43131–03	BOLT, CLAMP BRACKET TORNILLO DE ABRAZADERA DEL SOP		1	1			
16	90386–22M15	BUSH BUJE		2	2			
17	90201–22M67	WASHER, PLATE ARANDELA PLANA		2	2			
18	90185–22M11	NUT, SELF-LOCKING TUERCA AUTOBLOCANTE		1	1			
19	6G5–43145–01	CAP, CLAMP BRACKET TAPA		2	2			
20	688–43181–10	LEVER, TILT STOP 1 PALANCA TOPE INCLINACION 1		1	1			
21	688–43185–10	LEVER, TILT STOP 2 PALANCA TOPE INCLINACION 2		1	1			
22	663–43318–00	COVER CUBIERTA		2	2			
23	90386–10M16	BUSH BUJE		3	3			
24	6G5–43148–00	COLLAR, DISTANCE COLLAR		2	2			
25	91690–30020	PIN, SPRING PASADOR DE RESORTE		2	2			
26	90249–06M19	PIN PASADOR		1	1			
27	90387–10M02	COLLAR ESPACIADOR		1	1			

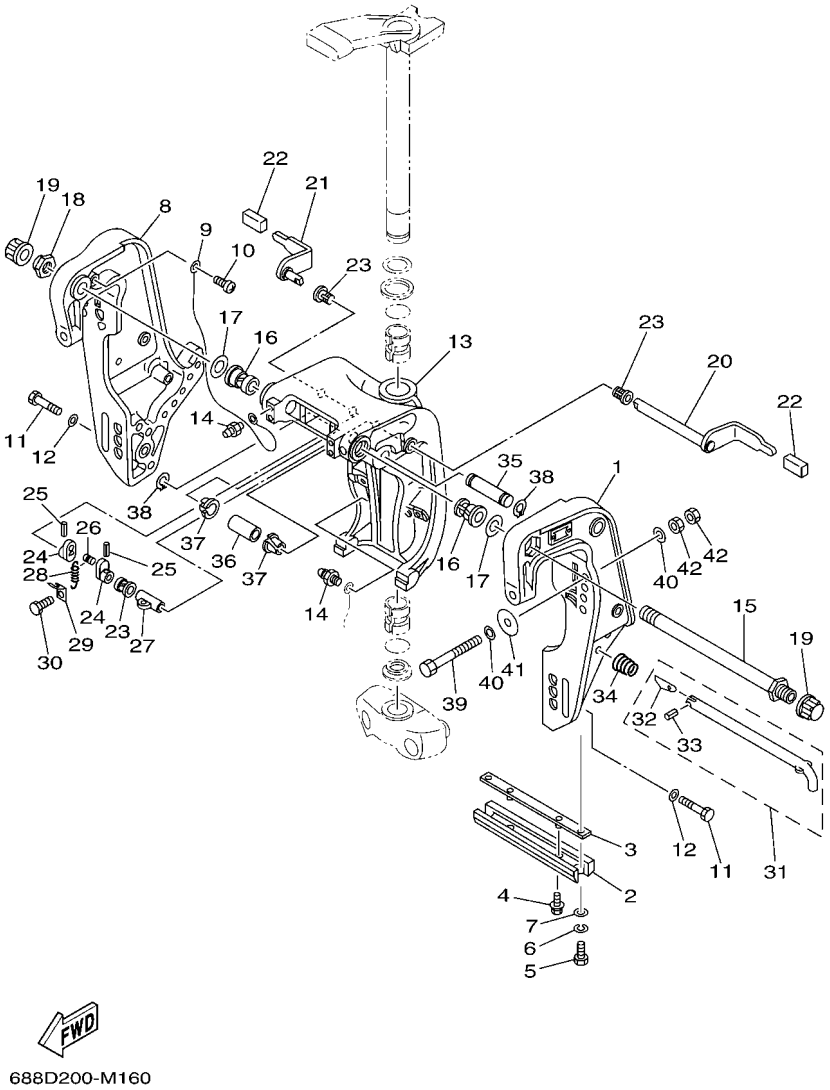

FIG. 16 BRACKET 2 — SOPORTE 2

REF. NO.	PART NO. CODIGO Nº	DESCRIPTION DESCRIPCION	ET	ED	EHD			REMARKS OBSERVACIONES
28	90506–14M24	SPRING, TENSION RESORTE DE TENSION		1	1			
29	6G5–43144–00	HOOK, SPRING GANCHO		1	1			
30	97095–06010	BOLT PERNO		1	1			
31	688–43160–01	TILT ROD ASSY VARILLA DE BASCULACION COMPL.		1	1			
32	688–43165–00	.PLATE, TILT LOCK .PLACA DE TOPE, VARILLA SEGURID		1	1			
33	91690–30012	.PIN, SPRING .PASADOR DE RESORTE		1	1			
34	90502–16M02	SPRING, CONICAL RESORTE CONICO		1	1			
35	6E5–43126–10	PIN, UPPER SHOCK MOUNT PASADOR DE AMORTIGUADOR SUPERI		1	1			
36	90386–18M21	BUSH BUJE		1	1			
37	90386–18M35	BUSH BUJE		2	2			
38	93410–18M05	CIRCLIP SEGURO		2	2			
39	90101–12M65	BOLT TORNILLO		4	4			
40	90201–12062	WASHER, PLATE ARANDELA PLANA		8	8			
41	90201–12426	WASHER, PLATE ARANDELA PLANA		4	4			
42	95380–12600	NUT TUERCA		8	8			

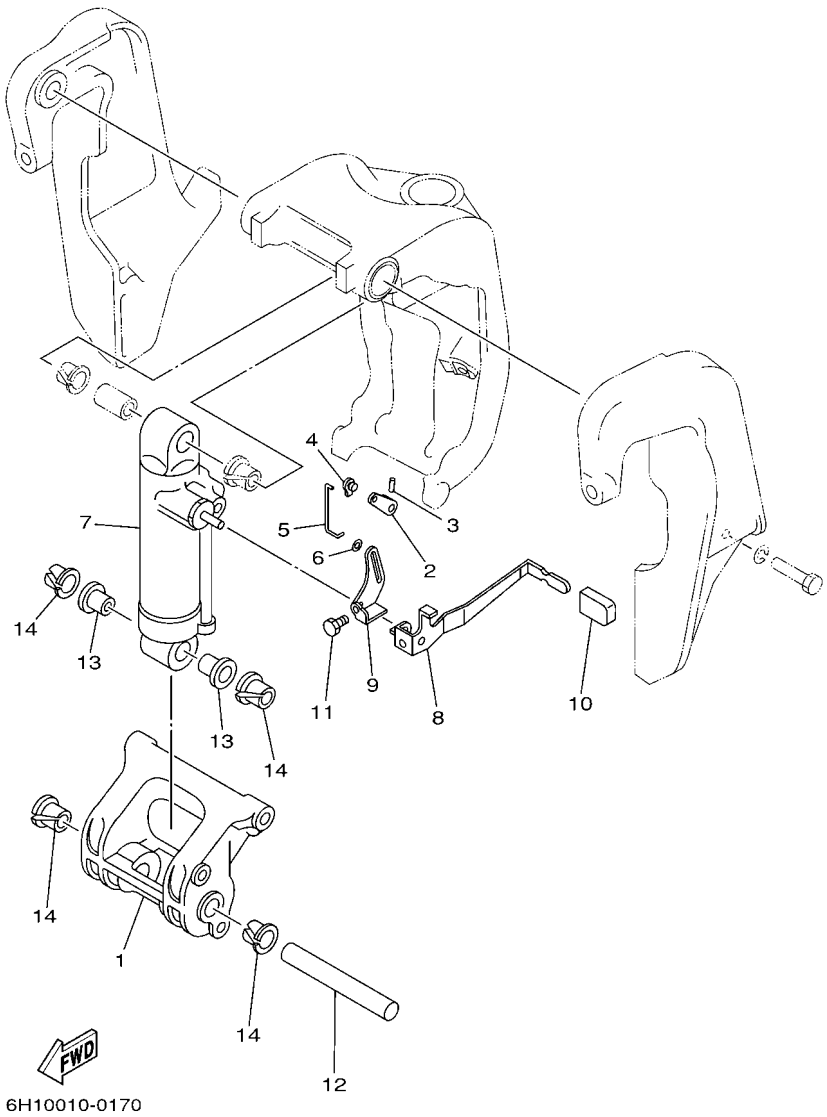

FIG. 17 BRACKET 3 — SOPORTE 3

REF. NO.	PART NO. CODIGO Nº	DESCRIPTION DESCRIPCION	ET	ED	EHD			REMARKS OBSERVACIONES
1	688–43128–01–8D	SPACER, CLAMP BRACKET ESPACIADOR ABRAZADERA SOPORTE		1	1			
2	688–43186–00	LEVER PALANCA		1	1			
3	91690–30020	PIN, SPRING PASADOR DE RESORTE		1	1			
4	6J8–41262–00	JOINT, CHOKE LEVER CONECTOR DE AHOGADOR		1	1			
5	688–43616–00	ROD, TILT LOCK VARILLA SEGURO DE INCLINACION		1	1			
6	90202–03M51	WASHER, PLATE ARANDELA DE PLANA		1	1			
7	688–43107–05–8D	SHOCK ABSORBER SUB-ASSY AMORTIGUADOR COMPL		1	1			
8	688–43631–10	LEVER, TILT PALANCA DE INCLINACION		1	1			
9	688–43651–00	LEVER, REVERSE LOCK 1 PALANCA SEGURO DE RESERVA		1	1			
10	682–43318–01	COVER CUBIERTA		1	1			
11	97080–06010	BOLT PERNO		1	1			
12	688–43124–02	PIN, LOWER SHOCK MOUNT PASADOR DE AMORTIGUADOR INFERI		1	1			
13	90386–18M63	BUSH BUJE		2	2			
14	90386–18M35	BUSH BUJE		4	4			

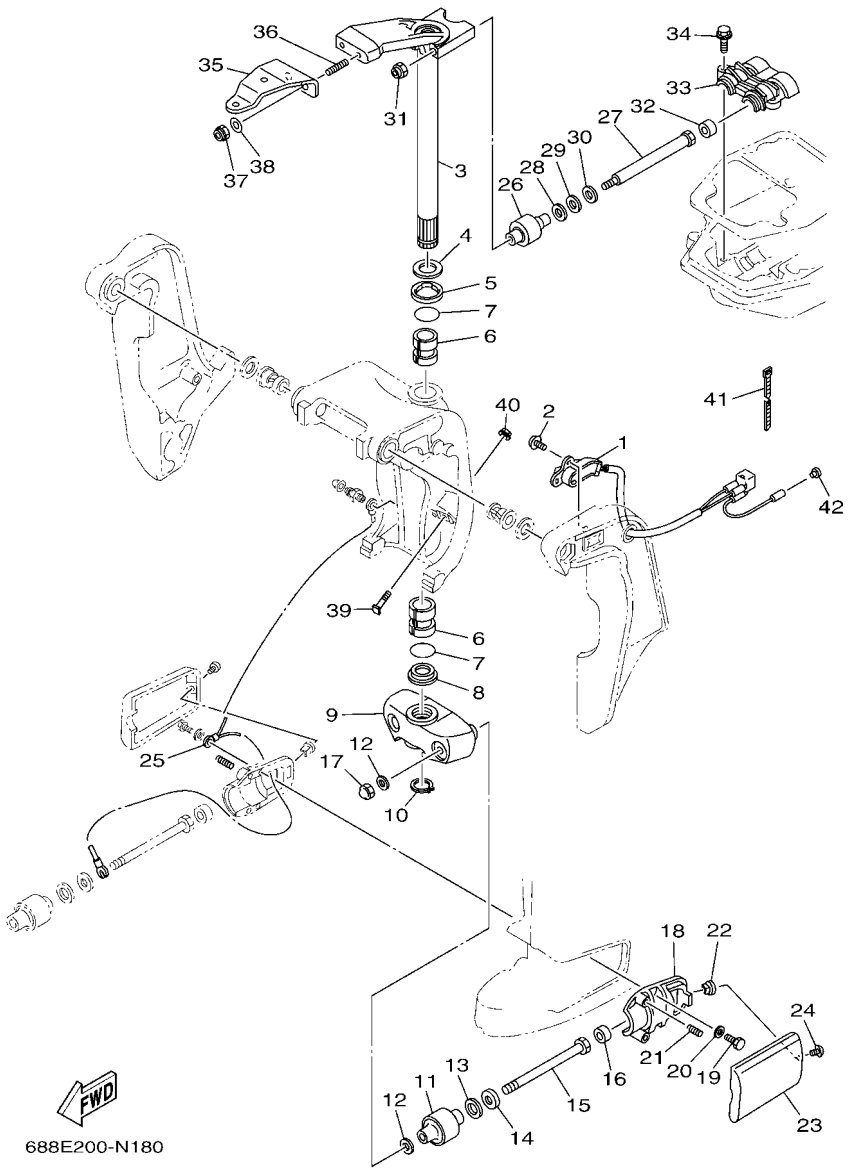

FIG. 18 BRACKET 4 — SOPORTE 4

REF. NO.	PART NO. CODIGO Nº	DESCRIPTION DESCRIPCION	ET	ED	EHD			REMARKS OBSERVACIONES
1	6H1–83672–13	TRIM SENDER TRANSMISOR DE INCLINADOR	1					
2	97985–06216	SCREW, WITH WASHER TORNILLO, CON ARANDELA	2					
3	688–42510–03–8D	STEERING BRACKET ASSY SOPORTE DIRECCION COMPL.	1	1	1			
4	90201–30M00	WASHER, PLATE ARANDELA PLANA	1	1	1			
5	90386–30M78	BUSH BUJE	1	1	1			
6	90386–30M77	BUSH BUJE	2	2	2			
7	93210–29M94	O-RING ANILLO O	2	2	2			
8	90386–30M60	BUSH BUJE	1	1	1			
9	663–44551–02–8D	HOUSING, LOWER MOUNT RUBBER 1 CAJA AMORTIGUADOR INFERIOR HU	1	1	1			
10	93410–28M06	CIRCLIP SEGURO	1	1	1			
11	687–44555–00	MOUNT DAMPER, LOWER SIDE AMORTIGUADOR DE HULE LADO INFE	2	2	2			
12	90201–12M16	WASHER, PLATE ARANDELA PLANA	4	4	4			
13	90202–25M04	WASHER, PLATE ARANDELA DE PLANA	2	2	2			
14	90201–13M19	WASHER, PLATE ARANDELA PLANA	2	2	2			
15	90109–12261	BOLT PERNO	2	2	2			
16	663–44575–00	DAMPER, LOWER MOUNT RUBBER AMORTIGUADOR INFERIOR	2	2	2			
17	95380–12800	NUT, CROWN TUERCA	2	2	2			
18	687–44552–02	HOUSING, LOWER MOUNT RUBBER 2 CAJA AMORTIGUADOR INFERIOR HU	2	2	2			
19	97075–08025	BOLT PERNO	4	4	4			
20	92995–08600	WASHER ARANDELA	4	4	4			
21	90501–14M08	SPRING, COMPRESSION RESORTE DE COMPRESION	4	4	4			
22	90179–06066	NUT TUERCA	2	2	2			
23	663–44553–01–8D	COVER, LOWER MOUNT CUBIERTA,AMORTIGUADOR INFERIOR	2	2	2			
24	97885–06016	SCREW, PAN HEAD TORNILLO A MUESCA	2	2	2			
25	688–82127–02	WIRE, LEAD 2 CABLE CONDUCTOR 2	1	1	1			
26	688–44514–00	MOUNT DAMPER, UPPER SIDE AMORTIGUADOR LADO SUPERIOR	2	2	2			
27	90101–10041	BOLT TORNILLO	2	2	2			

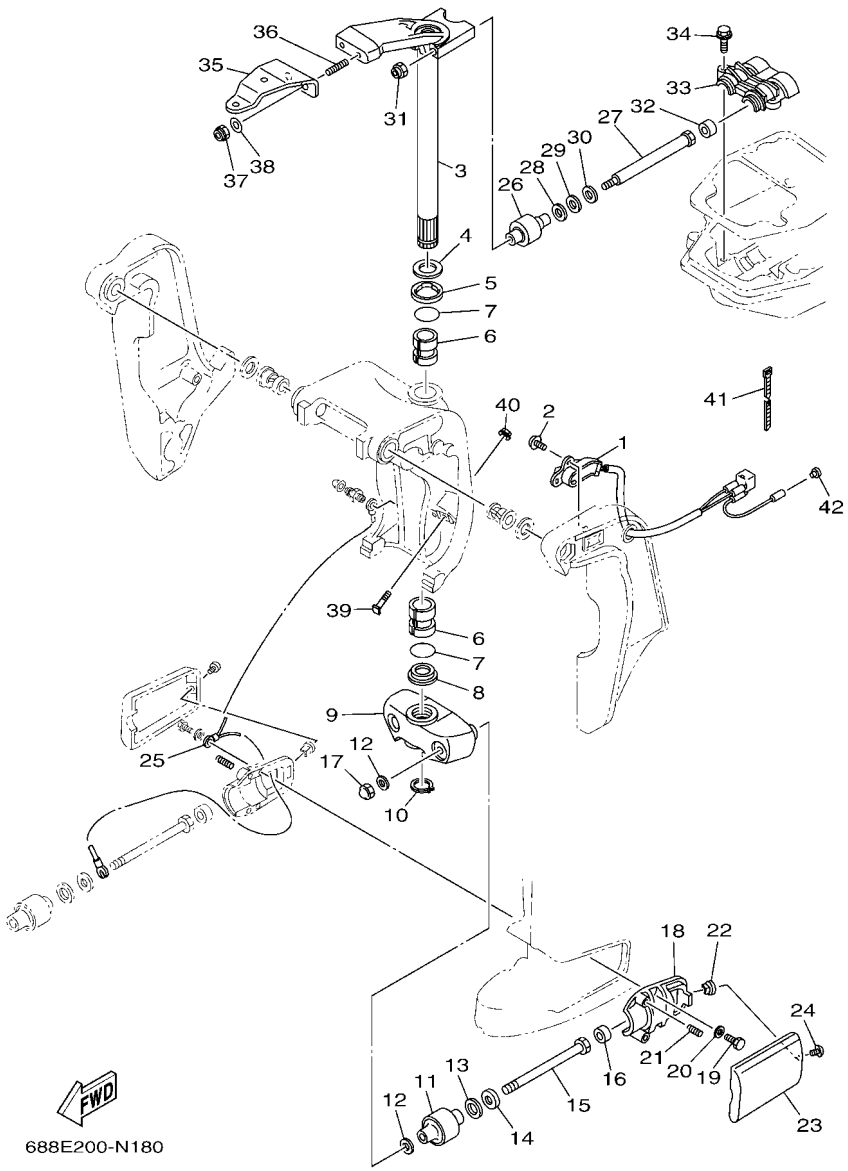

FIG. 18 BRACKET 4 — SOPORTE 4

REF. NO.	PART NO. CODIGO Nº	DESCRIPTION DESCRIPCION	ET	ED	EHD			REMARKS OBSERVACIONES
28	90201–20M21	WASHER, PLATE ARANDELA PLANA	2	2	2			
29	90202–20M06	WASHER, PLATE ARANDELA DE PLANA	2	2	2			
30	90201–11M22	WASHER, PLATE ARANDELA PLANA	2	2	2			
31	90185–10027	NUT, SELF-LOCKING TUERCA AUTOBLOCANTE	2	2	2			
32	663–44575–00	DAMPER, LOWER MOUNT RUBBER AMORTIGUADOR INFERIOR	2	2	2			
33	688–44511–00	COVER, UPPER MOUNT CUBIERTA AMORTIGUADOR SUPERIOR	1	1	1			
34	97575–08535	BOLT, WITH WASHER PERNO CON ARANDELA	3	3	3			
35	688–48511–12	HOOK, STEERING GANCHO DIRECCION	1	1				STEERING GUIDE STEERING GUIDE
36	90116–10063	BOLT, STUD ESPARRAGO	2	2	2			
37	90185–10027	NUT, SELF-LOCKING TUERCA AUTOBLOCANTE	2	2	2			
38	90201–10049	WASHER, PLATE ARANDELA PLANA	2	2				
39	6H1–43376–00	BOLT, THRUST RECEIVER TORNILLO RECEPTOR	2					
40	90185–08057	NUT, SELF-LOCKING TUERCA AUTOBLOCANTE	2					
41	90465–11M10	CLAMP BRIDA	3					
42	703–82119–00	COVER, LEAD WIRE CUBIERTA DE CABLE CONDUCTOR	1					

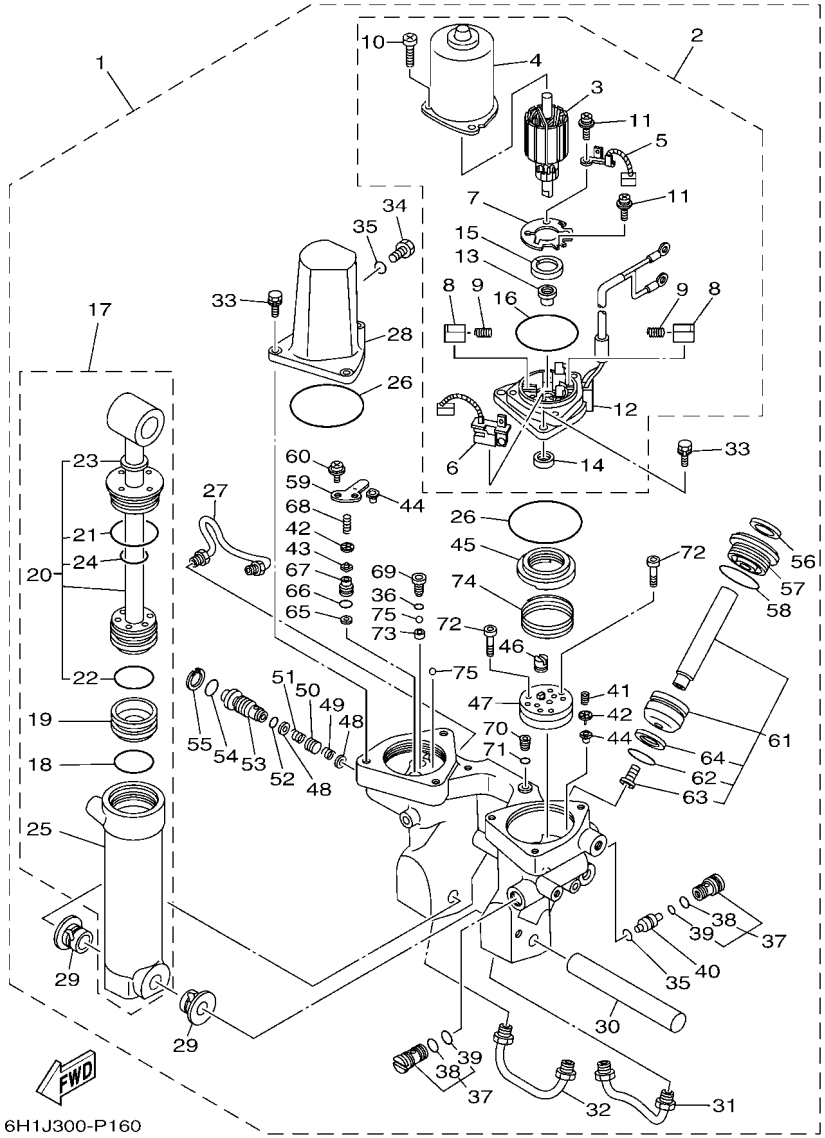

FIG. 19 POWER TRIM & TILT ASSY — COMPONER Y PODER VARILLA

REF. NO.	PART NO. CODIGO Nº	DESCRIPTION DESCRIPCION	ET	ED	EHD			REMARKS OBSERVACIONES
1	6H1–43800–17–8D	POWER TRIM & TILT ASSY ELEVADOR HIDRAULICO COMPL.	1					
2	6H1–43880–02	.MOTOR ASSY .MOTOR COMPL.	1					
3	6H1–43805–10	..ARMATURE ASSY ..INDUCIDO COMPL.	1					
4	6H1–43804–10	..STATOR ASSY ..ESTATOR COMPL	1					
5	6H1–43891–10	..BRUSH 1 ..ESCOBILLA 1	1					
6	6H1–43892–10	..BREAKER COMP. (BRUSH 2) ..RUPTOR COMPLETO (ESCOBILLA 2)	1					
7	6H1–4380F–10	..PLATE, BRUSH HOLDER ..PLACA	1					
8	6H1–4380J–10	..HOLDER, BRUSH ..PORTAESCOBILLA	2					
9	6H1–4386K–10	..SPRING, BRUSH ..RESORTE, ESCOBILLA	2					
10	97885–05016	..SCREW, PAN HEAD ..TORNILLO A MUESCA	3					
11	97607–04310	..SCREW, WITH WASHER ..TORNILLO CAB CON PLANA C/ARAN	2					
12	6H1–43881–10	..FRAME, END ..CUADRO EXTERMO	1					
13	6H1–4380H–10	..METAL ..METAL	1					
14	93102–08M43	..OIL SEAL ..SELLO ACEITE	1					
15	6H1–4380G–10	..PLATE ..PLACA	1					
16	6H1–43865–10	..O-RING ..ANILLO EN O 5	1					
17	6H1–43840–12	.POWER TILT ASSY .CONJUNTO COMPONER	1					
18	6H1–43861–10	..O-RING ..ANILLO EN O 1	1					
19	6H1–43814–11	..PISTON, FREE ..PISTON LIBRE	1					
20	6H1–43810–12	..TILT PISTON SUB ASSY ..ELEVADOR SUB-PISTON COMPL.	1					
21	6H1–43861–00	...O-RING ...ANILLO EN O 1	1					
22	6H1–43862–00	...O-RING ...ANILLO EN O 2	1					
23	6H1–43812–00	...SEAL, DUST ...SELLO DE POLVO	1					
24	6D8–43861–00	...O-RING ...ANILLO EN O 1	1					
25	6H1–43813–10	..CYLINDER, TILT ..CILINDRO INCLINACION	1					
26	93210–68N50	.O-RING .ANILLO O	2					
27	6H1–43835–10	.PIPE .TUBO 3	1					

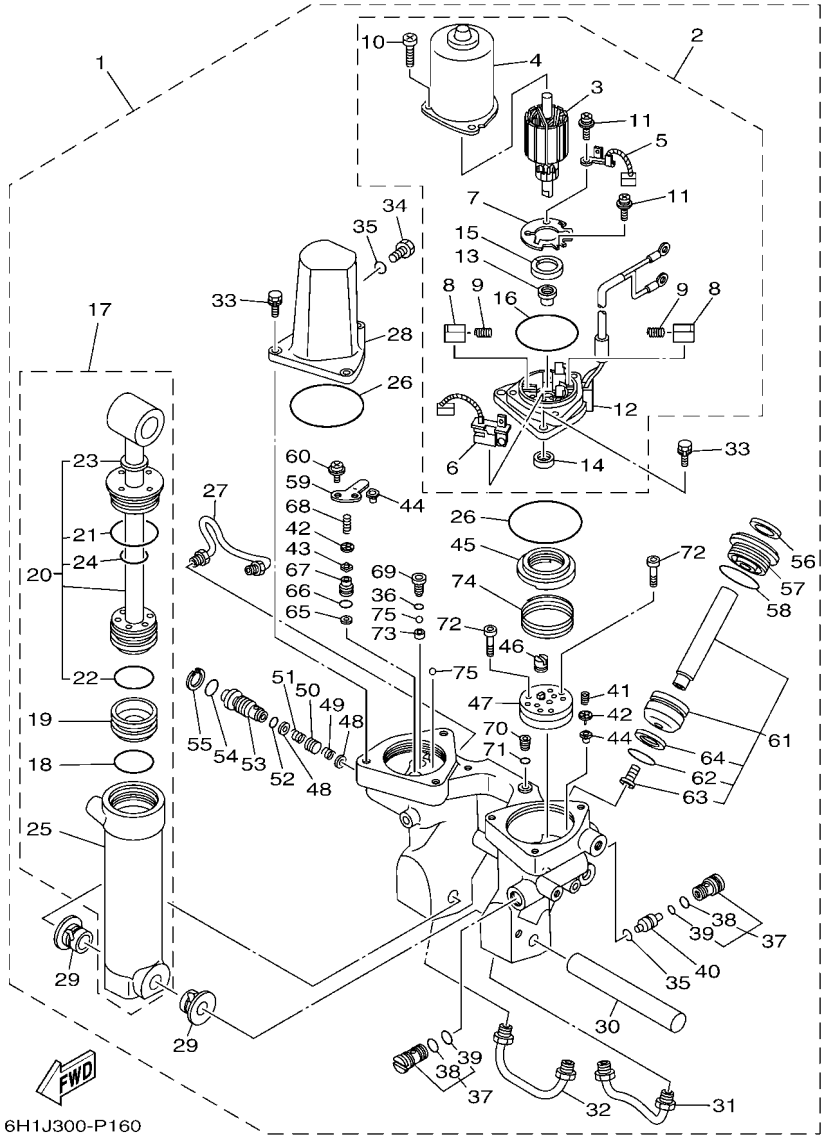

FIG. 19 POWER TRIM & TILT ASSY — COMPONER Y PODER VARILLA

REF. NO.	PART NO. CODIGO Nº	DESCRIPTION DESCRIPCION	ET	ED	EHD			REMARKS OBSERVACIONES
28	6H1–43828–10	.BODY, RESERVOIR .CUERPO DEPOSITO	1					
29	90386–18M14	.BUSH .BUJE	2					
30	6E5–43818–00	.PIN, LOWER SHOCK MOUNT .PASADOR AMORTIGUADOR INFERIOR	1					
31	6H1–43833–10	.PIPE .TUBO 1	1					
32	6H1–43834–00	.PIPE .TUBO 2	1					
33	97595–06420	.BOLT, WITH WASHER .PERNO CON ARANDELA	6					
34	6H1–43829–00	.PLUG, RESERVOIR .TAPON DEPOSITO	1					
35	93210–09165	.O-RING .ANILLO O	2					
36	93210–064A5	.O-RING .ANILLO O	1					
37	67F–43802–00	.VALVE SUB ASSY .VALVULA PRINCIPAL COMPL.	2					
38	6H1–43866–01	..O-RING ..ANILLO EN O 6	1					
39	93210–12N52	..O-RING ..ANILLO O	1					
40	6H1–43841–11	.PISTON, SHUTTLE .PISTON	1					
41	6H1–43856–10	.SPRING, DOWN RELIEF .RESORTE SEGURIDAD	1					
42	6H1–43844–10	.PIN, VALVE SUPPORT .PASADOR VALVULA SOPORTE	2					
43	6H1–4384G–11	.SEAL, RELIEF VALVE .ASIENTO	1					
44	6H1–4384F–10	.SEAL, MAIN VALVE .ASIENTO	2					
45	6H1–43817–01	.FILTER 2 .FIELTRO 2	1					
46	6H1–43831–10	.CONNECTOR, SHAFT .CONEXION EJE	1					
47	6H1–43830–11	.GEAR PUMP ASSY .ENGRANAJE BOMBA COMPL.	1					
48	6H1–43847–00	.SEAT, MANUAL VALVE .ASIENTO VALVULA MANUAL	2					
49	6H1–43899–00	.SPRING, MANUAL RELEASE .PLACA	1					
50	6H1–4382A–10	.ADAPTOR 1 .ADAPTADOR 1	1					
51	6H1–43854–00	.SPRING, MANUAL RELEASE .RESORTE DESCOPLO MANUAL	1					
52	93210–10M74	.O-RING .ANILLO O	1					
53	6H1–43845–00	.SCREW, MANUAL RELEASE .TORNILLO DESCOPLO MANUAL	1					
54	6D8–43863–00	.O-RING .ANILLO EN O 3	1					

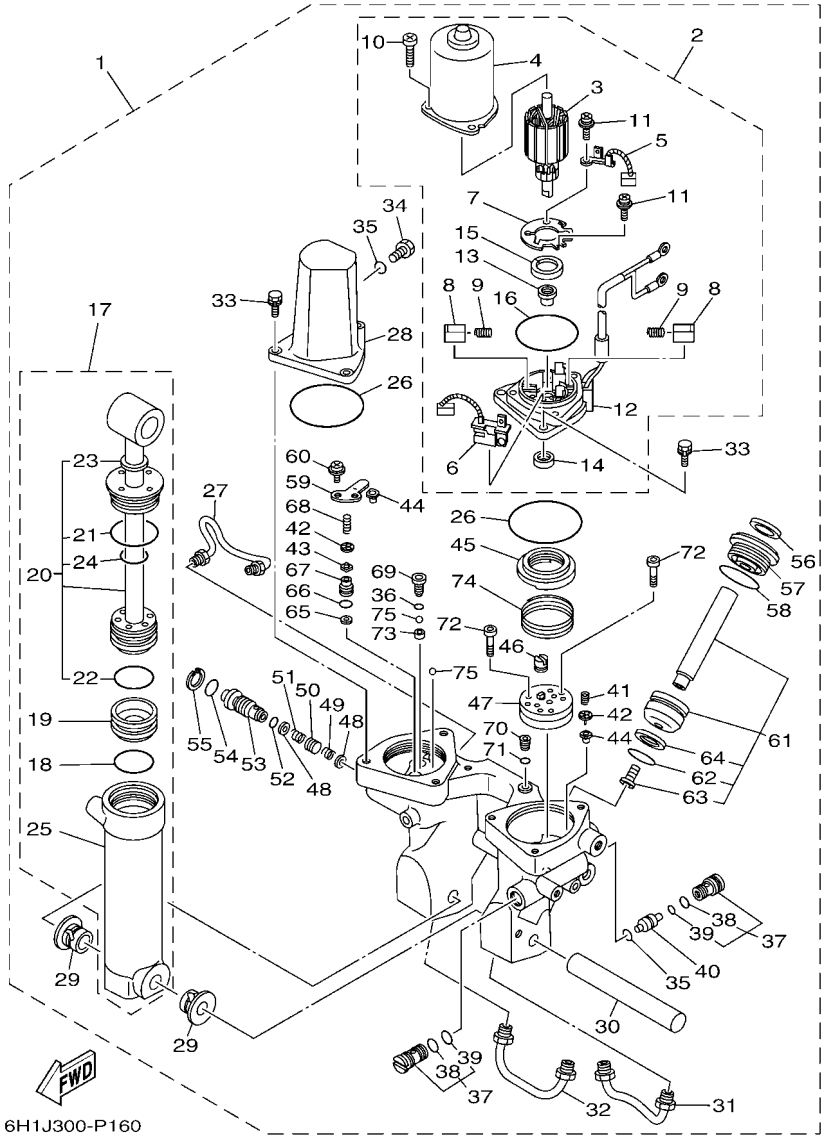

FIG. 19 POWER TRIM & TILT ASSY — COMPONER Y PODER VARILLA

REF. NO.	PART NO. CODIGO Nº	DESCRIPTION DESCRIPCION	ET	ED	EHD			REMARKS OBSERVACIONES
55	6H1–43875–00	.RING, SNAP .ANILLO	1					
56	6H1–43822–10	.SEAL, TRIM DUST .SELLO DE POLVO	2					
57	6H1–43821–11	.SCREW, TRIM CYLINDER END .TORNILLO CILINDURO EXTREMO	2					
58	6H1–43861–10	.O-RING .ANILLO EN O 1	2					
59	6H1–4384E–20	.SPRING, TRIM .RESORTO	1					
60	97602–05210	.SCREW, PAN HEAD WITH WASHER .TORNILLO CON RONDONA	2					
61	6H1–43820–11	.TRIM PISTON SUB ASSY .ELEVADOR PISTON COMPL.	2					
62	6H1–43864–00	..O-RING ..ANILLO EN O 4	1					
63	91318–08016	..BOLT, SOCKET HEAD ..TORNILLO	1					
64	6H1–43874–00	..RING, BACK UP ..ANILLO	1					
65	6H1–43816–00	.FILTER 1 .FIELTRO 1	1					
66	93210–11368	.O-RING .ANILLO O	1					
67	6H1–43895–12	.SEAT, RELIEF VALVE .ASIENTO	1					
68	6H1–43855–11	.SPRING, UP RELIEF .RESORTE SEGURIDAD SUPERIOR	1					
69	6H1–43843–11	.SCREW, VALVE LOCK .TORNILLO	1					
70	6H1–4388E–11	.PLUG, TAPER SCREW .TAPON	1					
71	6H1–43868–00	.O-RING .ANILLO EN O 8	1					
72	91318–04025	.BOLT .TORNILLO	4					
73	6H1–4387J–00	.WASHER, SPECIAL 2 .FIELTRO2	1					
74	6H1–4385H–00	.SPRING, SEAL .RESORTE	1					
75	93505–32038	.BALL .BOLA	2					

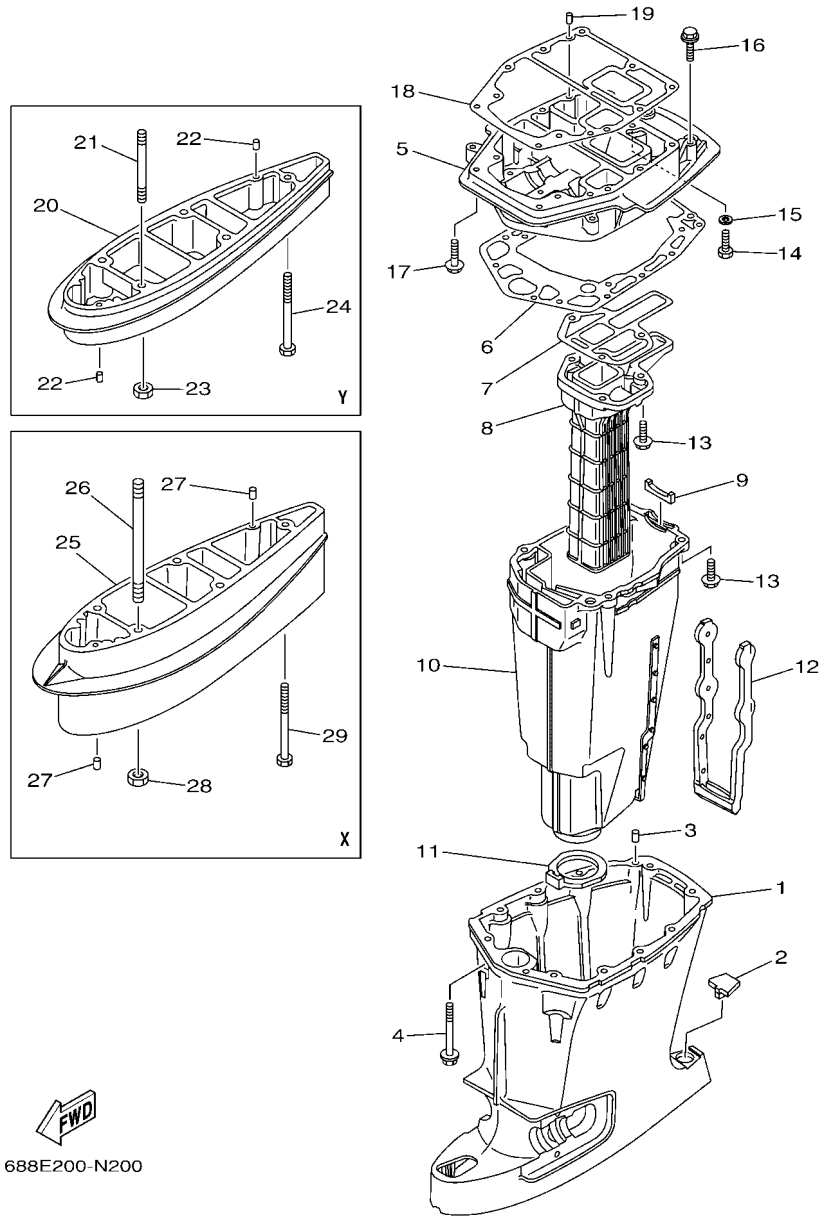

FIG. 20 UPPER CASING — FUNDA SUPERIOR

REF. NO.	PART NO. CODIGO Nº	DESCRIPTION DESCRIPCION	ET	ED	EHD			REMARKS OBSERVACIONES
1	688–45111–04–8D	CASING, UPPER CAJA SUPERIOR	1	1	1			
2	663–45155–10	CAP TAPA	1	1	1			
3	93606–12019	PIN, DOWEL PASADOR DE CLAVIJA	2	2	2			
4	90119–08M80	BOLT, WITH WASHER TORNILLO CON ARANDELA	8	8	8			
5	688–41137–03–CA	GUIDE, EXHAUST GUIA DE ESCAPE	1	1	1			
6	688–45114–A1	GASKET, UPPER CASING EMPAQUE	1	1	1			
7	688–41134–A0	GASKET, EXHAUST MANIFOLD EMPAQUE	1	1	1			
8	688–41131–00–CA	MANIFOLD, EXT. 1 TUBO MULTIPLE DE ESCAPE	1	1	1			
	688–41131–10–CA	MANIFOLD, EXT. 1 TUBO MULTIPLE DE ESCAPE	1	1	1			FOR OMN,YEM,NME FOR OMN,YEM,NME
9	688–41133–00	GASKET, EXHAUST MANIFOLD 1 EMPAQUE ESCAPE MULTIPLE	1	1	1			
10	688–14711–01–CA	MUFFLER 1 SILENCIADOR 1	1	1	1			
	688–14711–10–CA	MUFFLER 1 SILENCIADOR 1	1	1	1			FOR OMN,YEM,NME FOR OMN,YEM,NME
11	688–45123–00	GASKET, MUFFLER EMPAQUE SILENCIADOR	1	1	1			
12	663–14737–10	DAMPER, MUFFLER AMORTIGUADOR DE SILENCIADOR	1	1	1			
13	97575–08530	BOLT, WITH WASHER PERNO CON ARANDELA	7	7	7			
14	97075–08025	BOLT PERNO	1	1	1			
15	92995–08600	WASHER ARANDELA	1	1	1			
16	90119–08102	BOLT, WITH WASHER TORNILLO CON ARANDELA	2	2	2			
17	97575–08535	BOLT, WITH WASHER PERNO CON ARANDELA	2	2	2			
18	688–45113–A0	GASKET, UPPER CASING EMPAQUE	1	1	1			
19	93606–12019	PIN, DOWEL PASADOR DE CLAVIJA	2	2	2			
20	696–45211–01–8D	EXTENSION EXTENSION			1			Y(22.5") Y(22.5")
21	90116–10M31	BOLT, STUD ESPARRAGO			4			Y(22.5") Y(22.5")
22	93606–12019	PIN, DOWEL PASADOR DE CLAVIJA			4			Y(22.5") Y(22.5")
23	95380–10600	NUT TUERCA			4			Y(22.5") Y(22.5")
24	90119–08M85	BOLT, WITH WASHER TORNILLO CON ARANDELA			1			Y(22.5") Y(22.5")
25	688–45211–01–8D	EXTENSION EXTENSION	1	1	1			X(25.5") X(25.5")

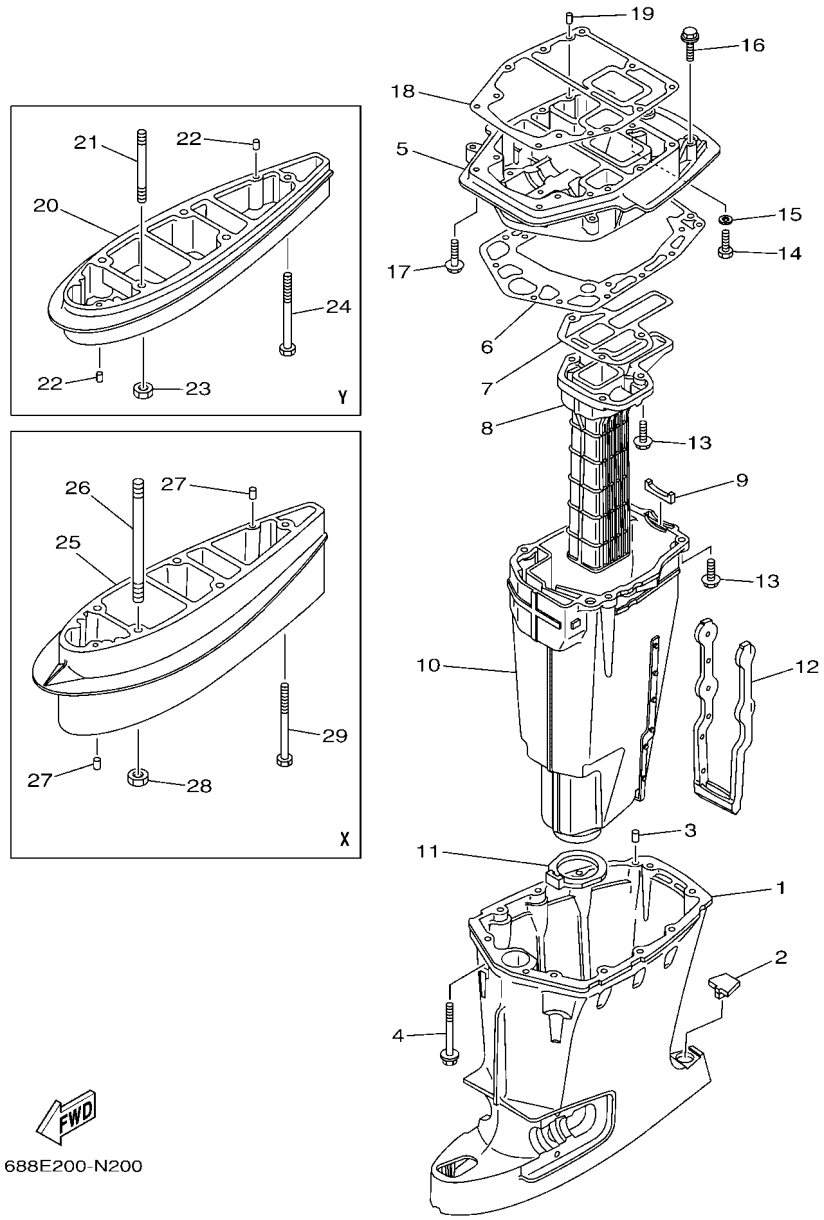

FIG. 20 UPPER CASING — FUNDA SUPERIOR

REF. NO.	PART NO. CODIGO Nº	DESCRIPTION DESCRIPCION	ET	ED	EHD			REMARKS OBSERVACIONES
26	90116–10M05	BOLT, STUD ESPARRAGO	4	4	4			X(25.5") X(25.5")
27	93606–12019	PIN, DOWEL PASADOR DE CLAVIJA	4	4	4			X(25.5") X(25.5")
28	95380–10600	NUT TUERCA	4	4	4			X(25.5") X(25.5")
29	90119–08M86	BOLT, WITH WASHER TORNILLO CON ARANDELA	1	1	1			X(25.5") X(25.5")

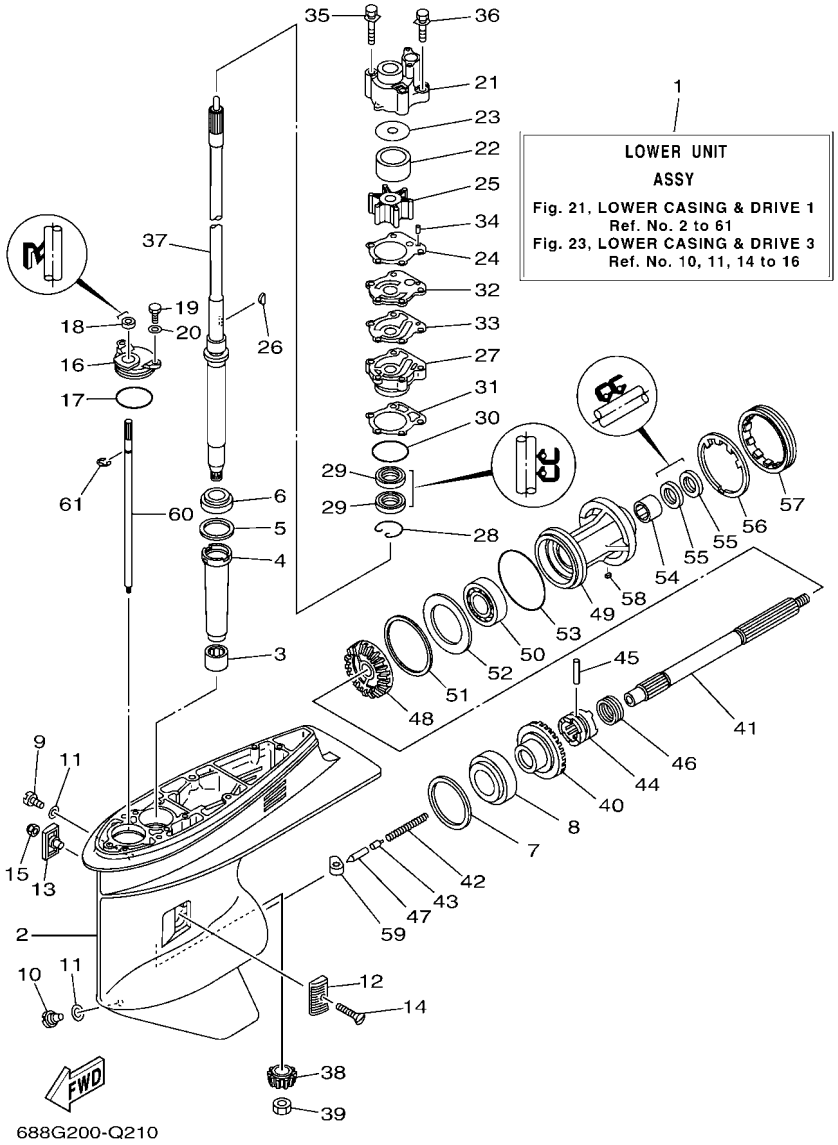

FIG. 21 LOWER CASING & DRIVE 1 — IMPULSOR E INFERIOR 1

REF. NO.	PART NO. CODIGO Nº	DESCRIPTION DESCRIPCION	ET	ED	EHD			REMARKS OBSERVACIONES
1	692–45300–16–8D	LOWER UNIT ASSY CONJUNTO UNIDAD INFERIOR	1	1	1			L(20.5") L(20.5")
	692–45300–35–8D	LOWER UNIT ASSY CONJUNTO UNIDAD INFERIOR			1			Y(22.5") Y(22.5")
	692–45300–25–8D	LOWER UNIT ASSY CONJUNTO UNIDAD INFERIOR	1	1	1			X(25.5") X(25.5")
2	688–45311–06–8D	CASING, LOWER FUNDA INFERIOR	1	1	1			
3	93315–325V1	BEARING COJINETE DE RODILLOS	1	1	1			
4	688–45536–01	SLEEVE, DRIVE SHAFT CAMISA EJE DE MANDO	1	1	1			
5	688–45587–01	SHIM (T:0.10MM) LAINA (T:0.10MM)	1	1	1			UR UR
	688–45587–10	SHIM (T:0.12MM) LAINA (T:0.12MM)	1	1	1			UR UR
	688–45587–20	SHIM (T:0.15MM) LAINA (T:0.15MM)	1	1	1			UR UR
	688–45587–30	SHIM (T:0.18MM) LAINA (T:0.18MM)	1	1	1			UR UR
	688–45587–40	SHIM (T:0.30MM) LAINA (T:0.30MM)	1	1	1			UR UR
	688–45587–50	SHIM (T:0.40MM) LAINA (T:0.40MM)	1	1	1			UR UR
	688–45587–60	SHIM (T:0.50MM) LAINA (T:0.50MM)	1	1	1			UR UR
6	93332–000U3	BEARING COJINETE	1	1	1			
7	688–45567–01	SHIM (T:0.10MM) LAINA (T:0.10MM)	1	1	1			UR UR
	688–45567–10	SHIM (T:0.12MM) LAINA (T:0.12MM)	1	1	1			UR UR
	688–45567–20	SHIM (T:0.15MM) LAINA (T:0.15MM)	1	1	1			UR UR
	688–45567–30	SHIM (T:0.18MM) LAINA (T:0.18MM)	1	1	1			UR UR
	688–45567–40	SHIM (T:0.30MM) LAINA (T:0.30MM)	1	1	1			UR UR
	688–45567–50	SHIM (T:0.40MM) LAINA (T:0.40MM)	1	1	1			UR UR
	688–45567–60	SHIM (T:0.50MM) LAINA (T:0.50MM)	1	1	1			UR UR
8	93332–000W7	BEARING COJINETE	1	1	1			
9	90340–08002	PLUG, STRAIGHT SCREW TORNILLO, DE DRENAJE	1	1	1			
10	688–45341–10	PLUG, DRAIN TAPON, DREN	1	1	1			
11	90430–08003	GASKET JUNTA	2	2	2			
12	6H1–45214–00	COVER, WATER INLET 1 CUBIERTA ENTRADA AGUA 1	1	1	1			
13	6H1–45215–00	COVER, WATER INLET 2 CUBIERTA ENTRADA AGUA 2	1	1	1			

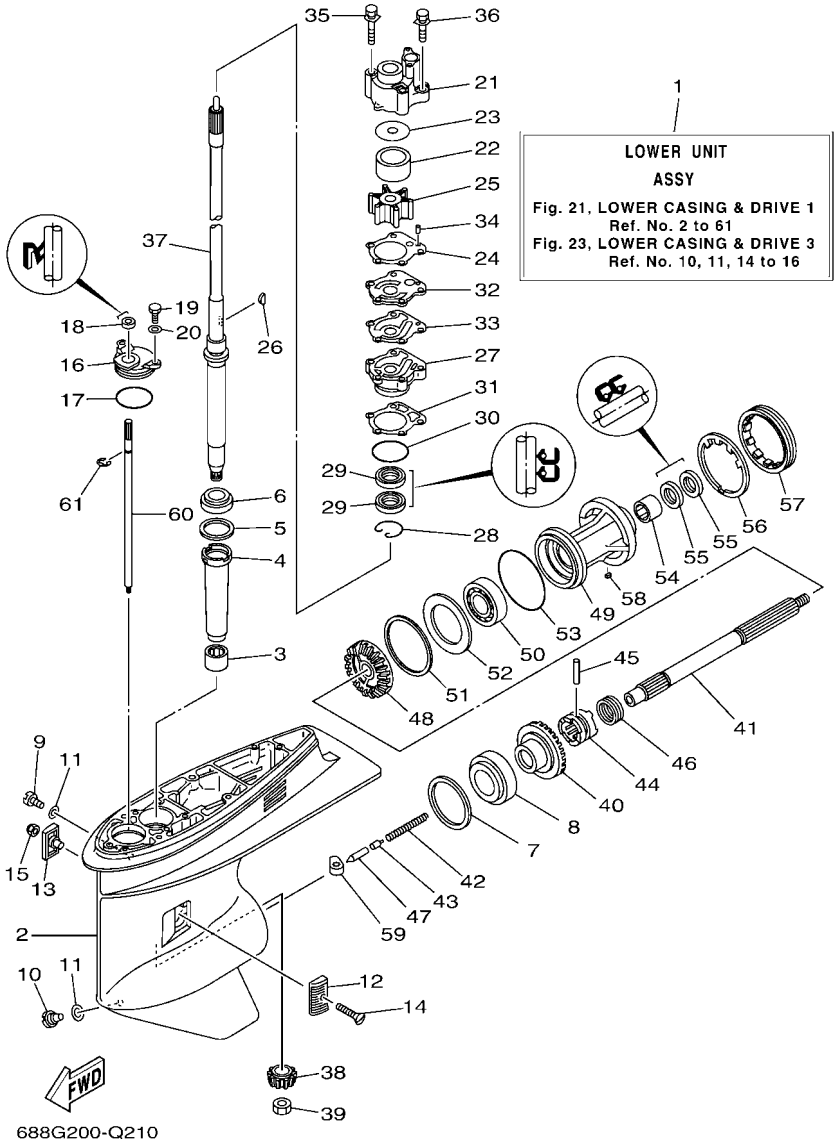

FIG. 21 LOWER CASING & DRIVE 1 — IMPULSOR E INFERIOR 1

REF. NO.	PART NO. CODIGO Nº	DESCRIPTION DESCRIPCION	ET	ED	EHD			REMARKS OBSERVACIONES
14	90151–05M00	SCREW, COUNTERSUNK TORNILLO EMBUTIDO	1	1	1			
15	90185–05002	NUT, NYLON TUERCA AUTOBLOCANTE	1	1	1			
16	688–45321–00	PLATE PLACA	1	1	1			
17	93210–49046	O-RING ANILLO O	1	1	1			
18	93106–09014	OIL SEAL SELLO ACEITE	1	1	1			
19	97095–06016	BOLT PERNO	2	2	2			
20	92995–06600	WASHER ARANDELA	2	2	2			
21	688–44311–01	HOUSING, WATER PUMP CAJA BOMBA DE AGUA	1	1	1			
22	688–44322–00	INSERT, CARTRIDGE CARTUCHO	1	1				FOR STD FOR STD
	688–44322–41	INSERT, CARTRIDGE CARTUCHO	1	1	1			FOR CHROMATE FOR CHROMATE
23	688–44321–41	INNER PLATE, CARTRIDGE PLACA INTERIOR CARTUCHO	1	1	1			FOR CHROMATE FOR CHROMATE
24	688–44315–A0	GASKET, WATER PUMP EMPAQUE	1	1	1			
25	688–44352–03	IMPELLER IMPULSOR	1	1	1			
26	90280–04M04	KEY, WOODRUFF CUNA WOODRUFF	1	1	1			
27	6D8–44341–01–CA	HOUSING, WATER PUMP CAJA BOMBA DE AGUA	1	1	1			
28	93450–44166	CIRCLIP SEGURO	1	1	1			
29	93101–25M03	OIL SEAL SELLO ACEITE	2	2	2			
30	93210–46044	O-RING ANILLO O	1	1	1			
31	688–44316–A0	GASKET, WATER PUMP EMPAQUE	1	1	1			
32	688–44323–00	OUTER PLATE, CARTRIDGE PLACA EXTERIOR DEL CARTUCHO	1	1				FOR STD FOR STD
	688–44323–40	OUTER PLATE, CARTRIDGE PLACA EXTERIOR DEL CARTUCHO	1	1	1			FOR CHROMATE FOR CHROMATE
33	688–44324–A0	GASKET, CARTRIDGE EMPAQUE	1	1	1			
34	93604–10M03	PIN, DOWEL PASADOR DE CLAVIJA	2	2	2			
35	90119–08M16	BOLT, WITH WASHER TORNILLO CON ARANDELA	2	2	2			
36	90119–08M13	BOLT, WITH WASHER TORNILLO CON ARANDELA	2	2	2			
37	688–45501–11	DRIVE SHAFT COMP. EJE DE MANDO COMPL.	1	1	1			L(20.5") L(20.5")
	692–45501–21	DRIVE SHAFT COMP. EJE DE MANDO COMPL.			1			Y(22.5") Y(22.5")

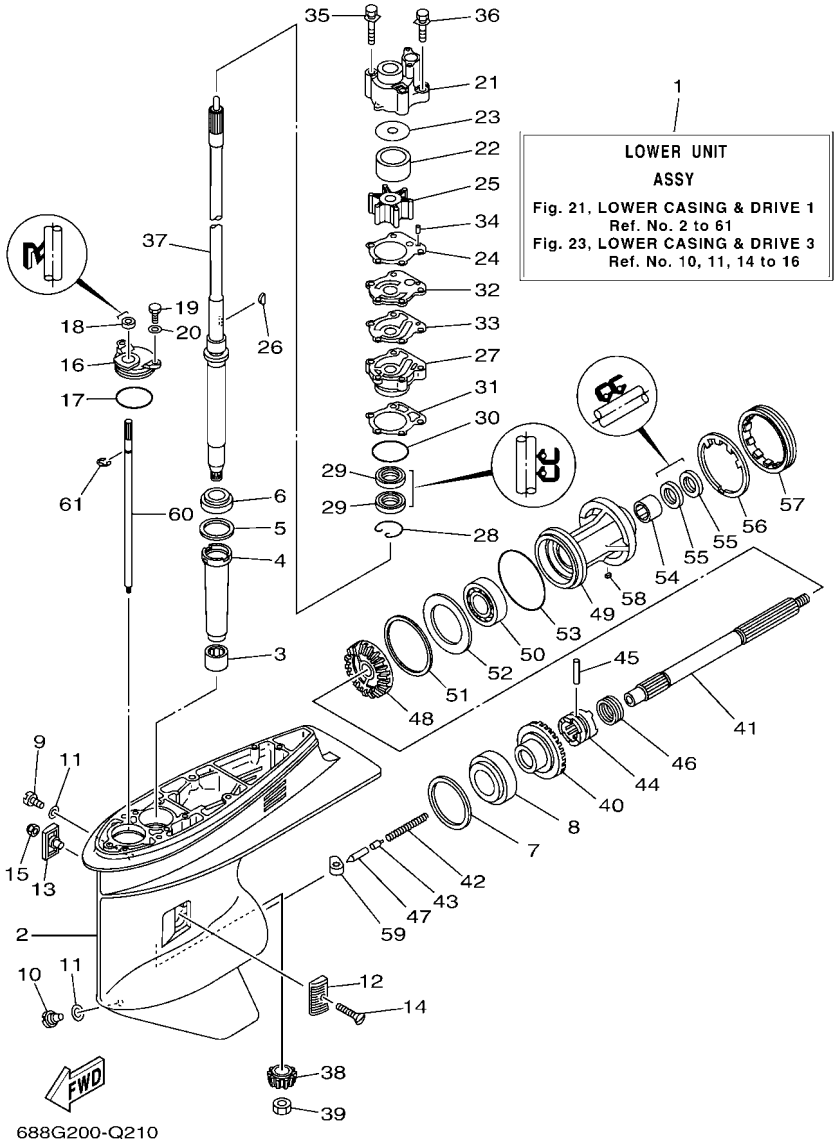

FIG. 21 LOWER CASING & DRIVE 1 — IMPULSOR E INFERIOR 1

REF. NO.	PART NO. CODIGO Nº	DESCRIPTION DESCRIPCION	ET	ED	EHD			REMARKS OBSERVACIONES
37	688–45501–22	DRIVE SHAFT COMP. EJE DE MANDO COMPL.	1	1	1			X(25.5") X(25.5")
38	688–45551–01	PINION (13T) PINON (13T)	1	1	1			
39	90170–16M01	NUT TUERCA	1	1	1			
40	688–45560–00	GEAR 1 (26T) ENGRANAJE 1 (26T)	1	1	1			
41	688–45611–00	SHAFT, PROPELLER EJE PROPUSOR	1	1	1			
42	90501–16233	SPRING, COMPRESSION RESORTE DE COMPRESION	1	1	1			
43	688–45634–00	SLIDE, SHIFT DESLIZADOR, CAMBIO	1	1	1			
44	688–45631–01	CLUTCH, DOG EMBRAGUE DE GARRA	1	1	1			
45	90250–07M02	PIN, STRAIGHT PASADOR CILINDRICO	1	1	1			
46	688–45633–00	RING, CROSS PIN ANILLO DE PASADOR	1	1	1			
47	688–45635–00	PLUNGER, SHIFT EMBOLO DE CAMBIO	1	1	1			
48	688–45571–01	GEAR 2 (26T) ENGRANAJE 2 (26T)	1	1	1			
49	688–45331–00–CA	HOUSING, BEARING CAJA DE COJINETE	1	1	1			
50	93306–207U0	BEARING COJINETE	1	1	1			
51	688–45577–01	SHIM (T:0.10MM) LAINA (T:0.10MM)	1	1	1			UR UR
	688–45577–10	SHIM (T:0.12MM) LAINA (:0.12MM)	1	1	1			UR UR
	688–45577–20	SHIM (T:0.15MM) LAINA (T:0.15MM)	1	1	1			UR UR
	688–45577–30	SHIM (T:0.18MM) LAINA (T:0.18MM)	1	1	1			UR UR
	688–45577–40	SHIM (T:0.30MM) LAINA (T:0.30MM)	1	1	1			UR UR
	688–45577–50	SHIM (T:0.40MM) LAINA (T:0.40MM)	1	1	1			UR UR
	688–45577–60	SHIM (T:0.50MM) LAINA (T:0.50MM)	1	1	1			UR UR
52	688–45576–00	WASHER, THRUST 2 ARANDELA DE EMPUJE AXIAL 2	1	1	1			
53	93210–85M97	O-RING ANILLO O	1	1	1			
54	93317–325U0	BEARING COJINETE	1	1	1			
55	93101–25M03	OIL SEAL SELLO ACEITE	2	2	2			
56	688–45383–02	WASHER, CLAW ARANDELA DE UNA	1	1	1			
57	688–45384–02	NUT TUERCA	1	1	1			

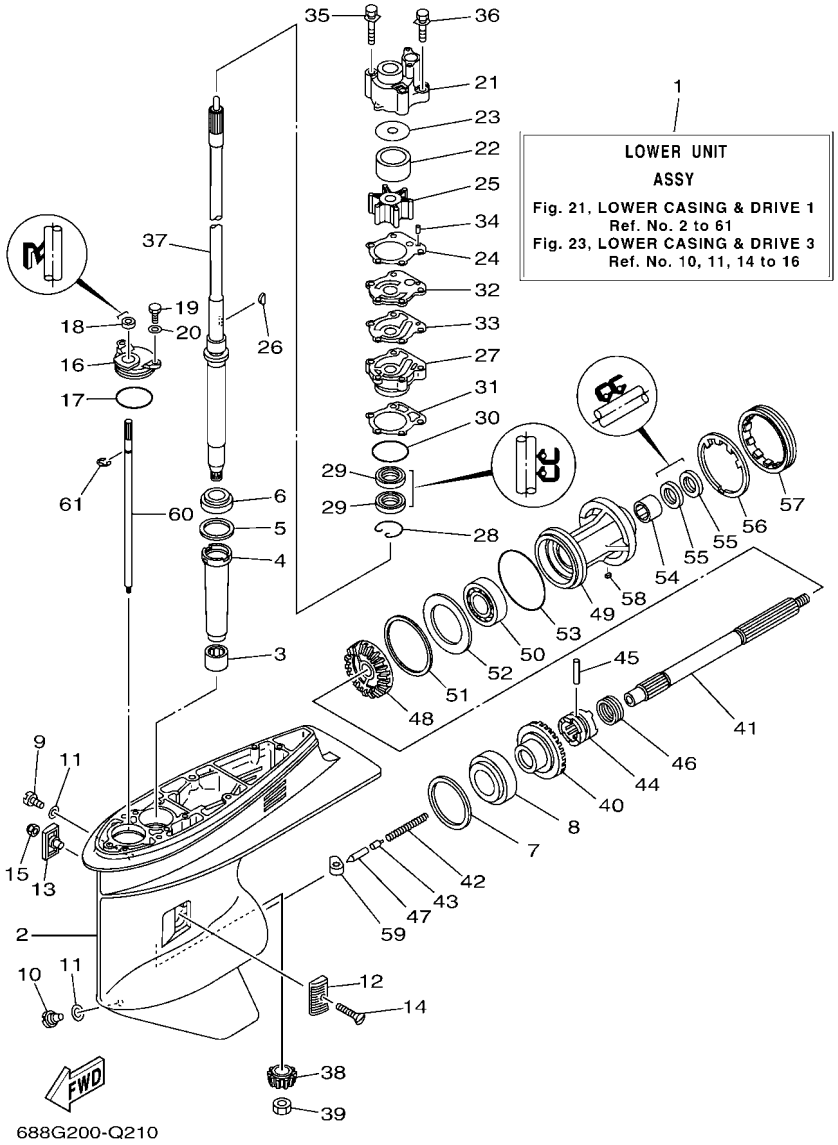

FIG. 21 LOWER CASING & DRIVE 1 — IMPULSOR E INFERIOR 1

REF. NO.	PART NO. CODIGO Nº	DESCRIPTION DESCRIPCION	ET	ED	EHD			REMARKS OBSERVACIONES
58	90282–04010	KEY, STRAIGHT CHAVETA, RECTA	1	1	1			
59	663–44151–00	CAM, SHIFT LEVA DE CAMBIO	1	1	1			
60	663–44144–01	ROD, SHIFT VARILLA DE CAMBIO	1	1	1			
61	99001–08600	CIRCLIP PRESILLA REDONDA	1	1	1			

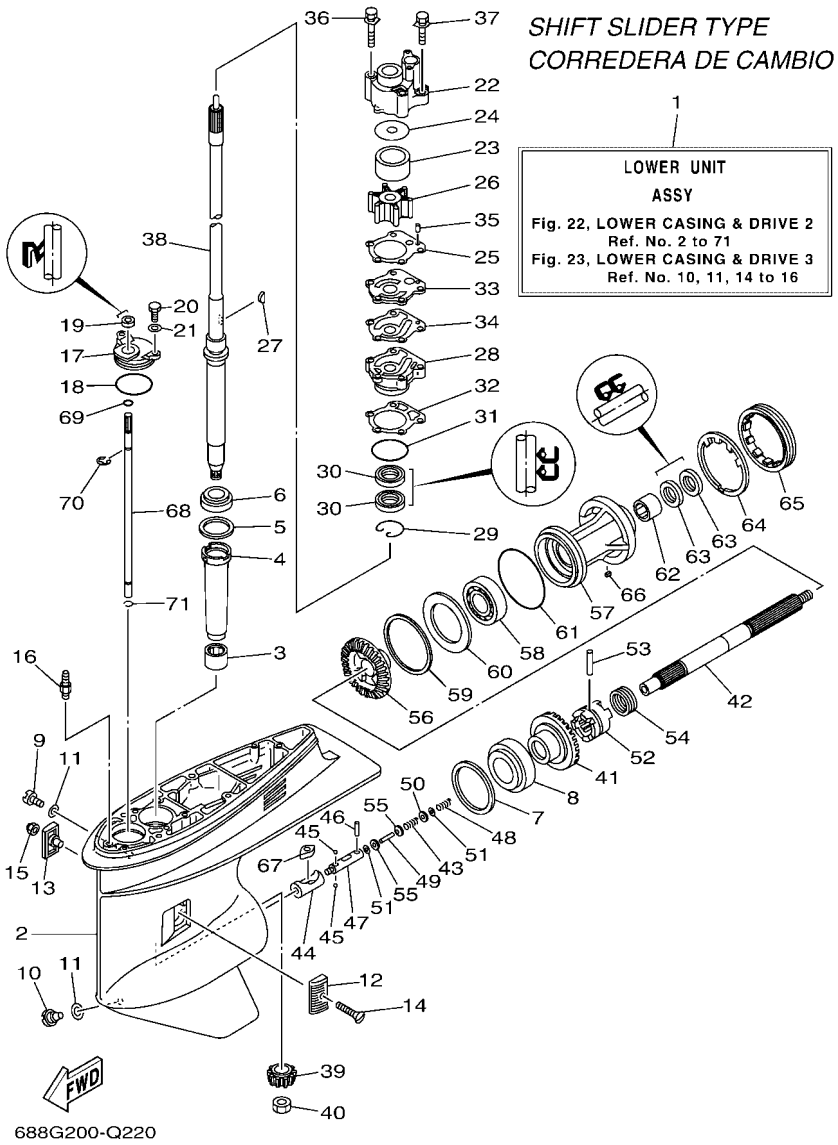

FIG. 22 LOWER CASING & DRIVE 2 — IMPULSOR E INFERIOR 2

REF. NO.	PART NO. CODIGO Nº	DESCRIPTION DESCRIPCION	ET	ED	EHD			REMARKS OBSERVACIONES
1	692–45300–41–8D	LOWER UNIT ASSY CONJUNTO UNIDAD INFERIOR	1		1			L(20.5") 85A-MYS,KOR L(20.5") 85A-MYS,KOR
2	6H1–45301–03–8D	CASING, LOWER FUNDA INFERIOR COMPLETA	1		1			
3	93315–325V1	BEARING COJINETE DE RODILLOS	1		1			
4	688–45536–01	SLEEVE, DRIVE SHAFT CAMISA EJE DE MANDO	1		1			
5	688–45587–01	SHIM (T:0.10MM) LAINA (T:0.10MM)	1		1			UR UR
	688–45587–10	SHIM (T:0.12MM) LAINA (T:0.12MM)	1		1			UR UR
	688–45587–20	SHIM (T:0.15MM) LAINA (T:0.15MM)	1		1			UR UR
	688–45587–30	SHIM (T:0.18MM) LAINA (T:0.18MM)	1		1			UR UR
	688–45587–40	SHIM (T:0.30MM) LAINA (T:0.30MM)	1		1			UR UR
	688–45587–50	SHIM (T:0.40MM) LAINA (T:0.40MM)	1		1			UR UR
	688–45587–60	SHIM (T:0.50MM) LAINA (T:0.50MM)	1		1			UR UR
6	93332–000U3	BEARING COJINETE	1		1			
7	688–45567–01	SHIM (T:0.10MM) LAINA (T:0.10MM)	1		1			UR UR
	688–45567–10	SHIM (T:0.12MM) LAINA (T:0.12MM)	1		1			UR UR
	688–45567–20	SHIM (T:0.15MM) LAINA (T:0.15MM)	1		1			UR UR
	688–45567–30	SHIM (T:0.18MM) LAINA (T:0.18MM)	1		1			UR UR
	688–45567–40	SHIM (T:0.30MM) LAINA (T:0.30MM)	1		1			UR UR
	688–45567–50	SHIM (T:0.40MM) LAINA (T:0.40MM)	1		1			UR UR
	688–45567–60	SHIM (T:0.50MM) LAINA (T:0.50MM)	1		1			UR UR
8	93332–000W7	BEARING COJINETE	1		1			
9	90340–08002	PLUG, STRAIGHT SCREW TORNILLO, DE DRENAJE	1		1			
10	688–45341–10	PLUG, DRAIN TAPON, DREN	1		1			
11	90430–08003	GASKET JUNTA	2		2			
12	6H1–45214–00	COVER, WATER INLET 1 CUBIERTA ENTRADA AGUA 1	1		1			
13	6H1–45215–00	COVER, WATER INLET 2 CUBIERTA ENTRADA AGUA 2	1		1			
14	90151–05M00	SCREW, COUNTERSUNK TORNILLO EMBUTIDO	1		1			
15	90185–05002	NUT, NYLON TUERCA AUTOBLOCANTE	1		1			

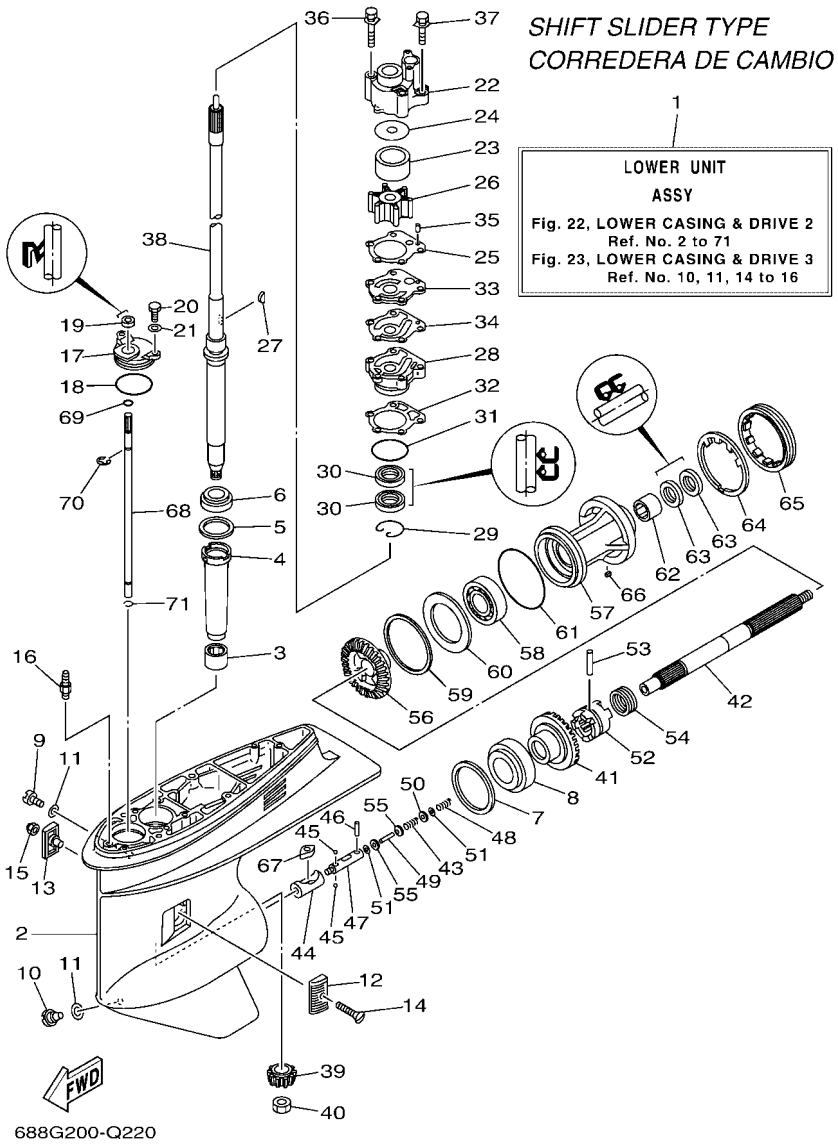

FIG. 22 LOWER CASING & DRIVE 2 — IMPULSOR E INFERIOR 2

REF. NO.	PART NO. CODIGO Nº	DESCRIPTION DESCRIPCION	ET	ED	EHD			REMARKS OBSERVACIONES
16	6J8–45378–00	NIPPLE, HOSE (PLUG) NIPLE MANGUERA (TAPON)	1		1			
17	688–45321–00	PLATE PLACA	1		1			
18	93210–49046	O-RING ANILLO O	1		1			
19	93106–09014	OIL SEAL SELLO ACEITE	1		1			
20	97095–06016	BOLT PERNO	2		2			
21	92995–06600	WASHER ARANDELA	2		2			
22	688–44311–01	HOUSING, WATER PUMP CAJA BOMBA DE AGUA	1		1			
23	688–44322–41	INSERT, CARTRIDGE CARTUCHO	1		1			FOR CHROMATE FOR CHROMATE
24	688–44321–41	INNER PLATE, CARTRIDGE PLACA INTERIOR CARTUCHO	1		1			FOR CHROMATE FOR CHROMATE
25	688–44315–A0	GASKET, WATER PUMP EMPAQUE	1		1			
26	688–44352–03	IMPELLER IMPULSOR	1		1			
27	90280–04M04	KEY, WOODRUFF CUNA WOODRUFF	1		1			
28	6D8–44341–01–CA	HOUSING, WATER PUMP CAJA BOMBA DE AGUA	1		1			
29	93450–44166	CIRCLIP SEGURO	1		1			
30	93101–25M03	OIL SEAL SELLO ACEITE	2		2			
31	93210–46044	O-RING ANILLO O	1		1			
32	688–44316–A0	GASKET, WATER PUMP EMPAQUE	1		1			
33	688–44323–40	OUTER PLATE, CARTRIDGE PLACA EXTERIOR DEL CARTUCHO	1		1			FOR CHROMATE FOR CHROMATE
34	688–44324–A0	GASKET, CARTRIDGE EMPAQUE	1		1			
35	93604–10M03	PIN, DOWEL PASADOR DE CLAVIJA	2		2			
36	90119–08M16	BOLT, WITH WASHER TORNILLO CON ARANDELA	2		2			
37	90119–08M13	BOLT, WITH WASHER TORNILLO CON ARANDELA	2		2			
38	688–45501–11	DRIVE SHAFT COMP. EJE DE MANDO COMPL.	1		1			L(20.5") L(20.5")
39	688–45551–01	PINION (13T) PINON (13T)	1		1			
40	90170–16M01	NUT TUERCA	1		1			
41	688–45560–00	GEAR 1 (26T) ENGRANAJE 1 (26T)	1		1			
42	6H1–45611–01	SHAFT, PROPELLER EJE PROPUSOR	1		1			

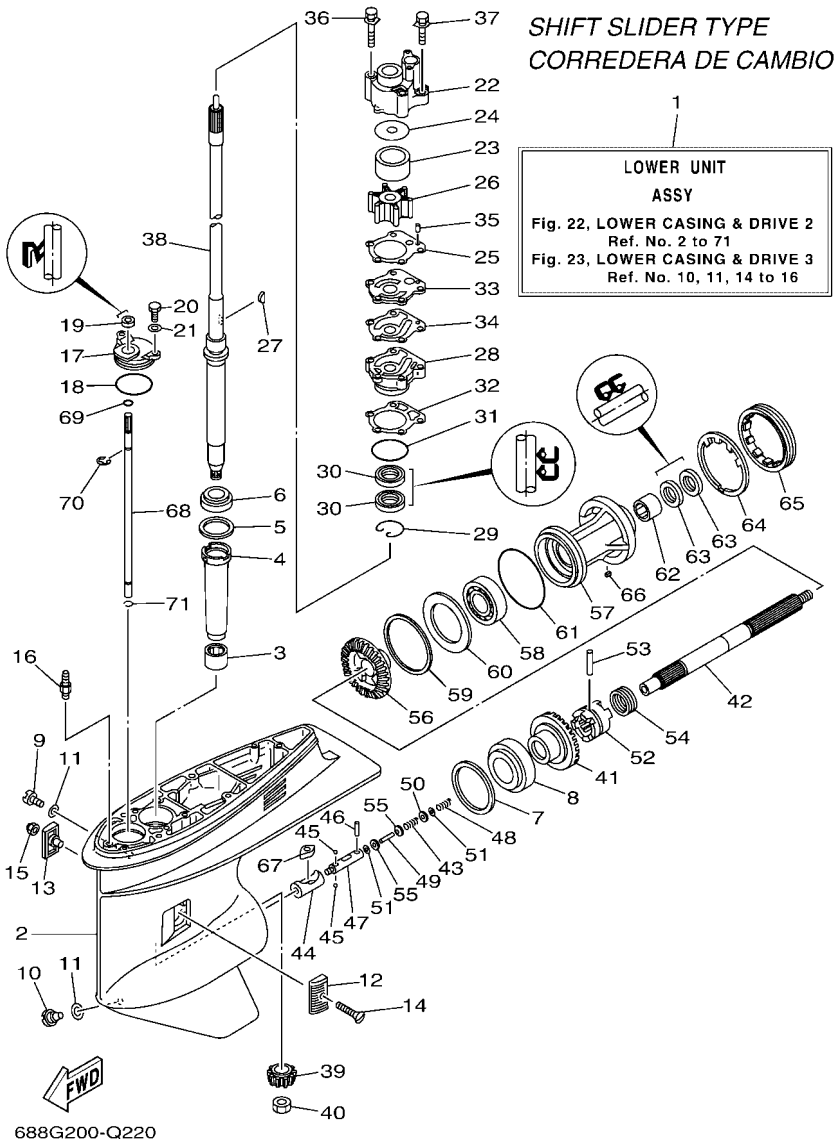

FIG. 22 LOWER CASING & DRIVE 2 — IMPULSOR E INFERIOR 2

REF. NO.	PART NO. CODIGO Nº	DESCRIPTION DESCRIPCION	ET	ED	EHD			REMARKS OBSERVACIONES
43	90501–12M48	SPRING, COMPRESSION RESORTE DE COMPRESION	1		1			
44	6H1–45641–01	SHIFTER CAMBIO	1		1			
45	93503–16003	BALL ESFERA	2		2			
46	93603–12M11	PIN, DOWEL PASADOR DE CLAVIJA	1		1			
47	6H1–45634–02	SLIDE, SHIFT DESLIZADOR, CAMBIO	1		1			
48	90501–16M65	SPRING, COMPRESSION RESORTE DE COMPRESION	1		1			
49	6H1–45668–00	SHAFT, FREE 1 EJE 1	1		1			
50	90201–03313	WASHER, PLATE ARANDELA PLANA	1		1			
51	90183–02M03	NUT, SPRING TUERCA DE RESORTE	2		2			
52	6H1–45631–01	CLUTCH, DOG EMBRAGUE DE GARRA	1		1			
53	90250–07M02	PIN, STRAIGHT PASADOR CILINDRICO	1		1			
54	688–45633–00	RING, CROSS PIN ANILLO DE PASADOR	1		1			
55	6H1–45635–00	PLUNGER, SHIFT EMBOLO DE CAMBIO	2		2			
56	6H1–45571–00	GEAR 2 (26T) ENGRANAJE 2 (26T)	1		1			
57	688–45331–00–CA	HOUSING, BEARING CAJA DE COJINETE	1		1			
58	93306–207U0	BEARING COJINETE	1		1			
59	688–45577–01	SHIM (T:0.10MM) LAINA (T:0.10MM)	1		1			UR UR
	688–45577–10	SHIM (T:0.12MM) LAINA (:0.12MM)	1		1			UR UR
	688–45577–20	SHIM (T:0.15MM) LAINA (T:0.15MM)	1		1			UR UR
	688–45577–30	SHIM (T:0.18MM) LAINA (T:0.18MM)	1		1			UR UR
	688–45577–40	SHIM (T:0.30MM) LAINA (T:0.30MM)	1		1			UR UR
	688–45577–50	SHIM (T:0.40MM) LAINA (T:0.40MM)	1		1			UR UR
	688–45577–60	SHIM (T:0.50MM) LAINA (T:0.50MM)	1		1			UR UR
60	688–45576–00	WASHER, THRUST 2 ARANDELA DE EMPUJE AXIAL 2	1		1			
61	93210–85M97	O-RING ANILLO O	1		1			
62	93317–325U0	BEARING COJINETE	1		1			
63	93101–25M03	OIL SEAL SELLO ACEITE	2		2			

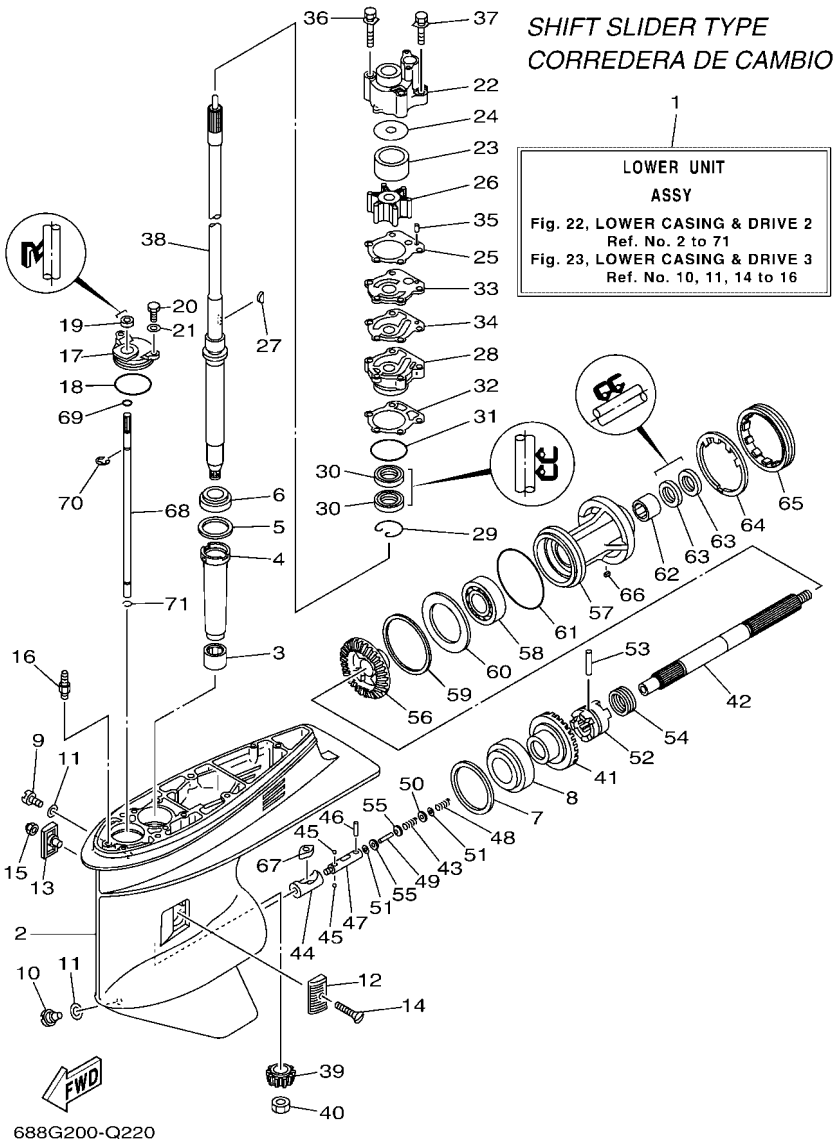

FIG. 22 LOWER CASING & DRIVE 2 — IMPULSOR E INFERIOR 2

REF. NO.	PART NO. CODIGO Nº	DESCRIPTION DESCRIPCION	ET	ED	EHD			REMARKS OBSERVACIONES
64	688–45383–02	WASHER, CLAW ARANDELA DE UNA	1		1			
65	688–45384–02	NUT TUERCA	1		1			
66	90282–04010	KEY, STRAIGHT CHAVETA, RECTA	1		1			
67	6H1–44151–00	CAM, SHIFT LEVA DE CAMBIO	1		1			
68	6H1–44144–00	ROD, SHIFT VARILLA DE CAMBIO	1		1			
69	93210–07003	O-RING ANILLO O	1		1			
70	99001–08600	CIRCLIP PRESILLA REDONDA	1		1			
71	93450–07M00	CIRCLIP SEGURO	1		1			

FIG. 23 LOWER CASING & DRIVE 3 — IMPULSOR E INFERIOR 3

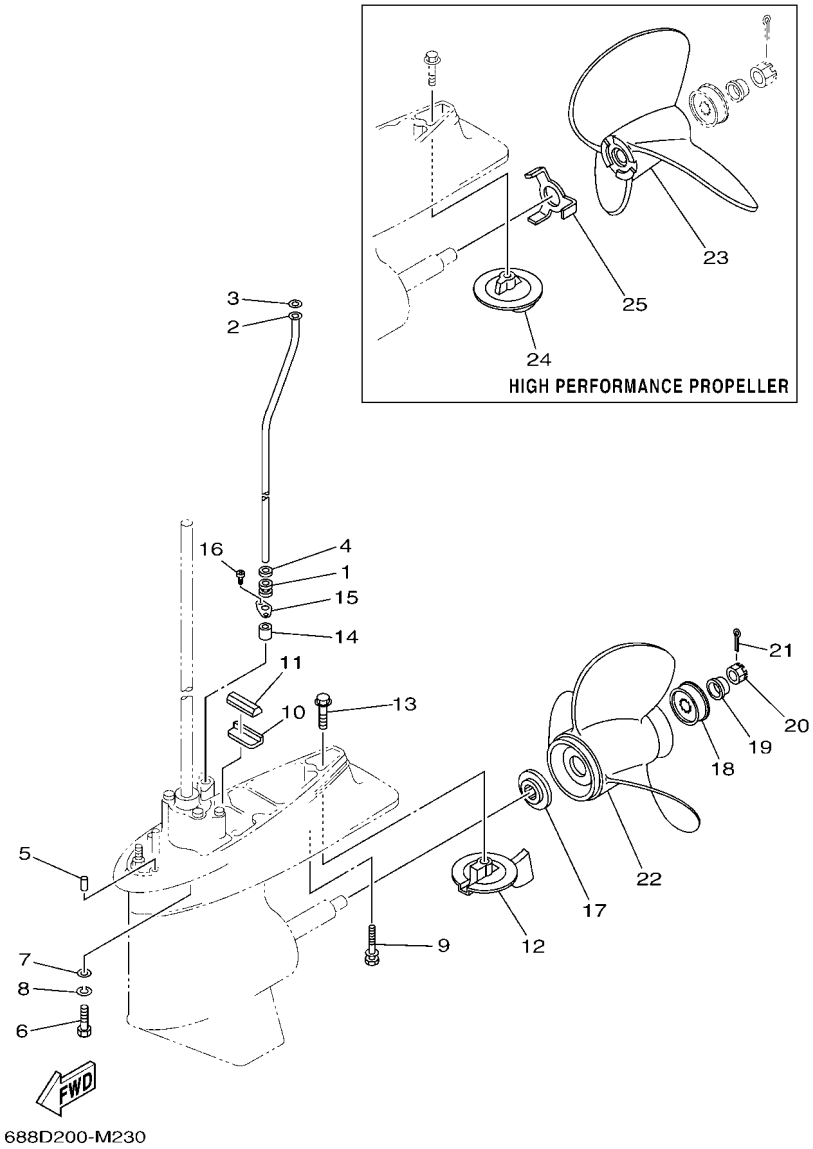

REF. NO.	PART NO. CODIGO Nº	DESCRIPTION DESCRIPCION	ET	ED	EHD			REMARKS OBSERVACIONES
1	663–44367–00	DAMPER, WATER SEAL 3 GOMA DEL SELLO DE AGUA 3	1	1	1			
2	688–44361–10	TUBE, WATER 1 TUBO DE AGUA 1	1	1	1			L(20.5") L(20.5")
	692–44361–20	TUBE, WATER 1 TUBO DE AGUA 1			1			Y(22.5") Y(22.5")
	688–44361–20	TUBE, WATER 1 TUBO DE AGUA 1	1	1	1			X(25.5") X(25.5")
3	90202–12060	WASHER, PLATE ARANDELA DE PLANA	1	1	1			
4	90430–12072	GASKET JUNTA	1	1	1			
5	93606–12019	PIN, DOWEL PASADOR DE CLAVIJA	2	2	2			L(20.5") L(20.5")
6	97075–10040	BOLT PERNO	4	4	4			L(20.5") L(20.5")
7	92995–10600	WASHER ARANDELA	4	4	4			
8	92990–10100	WASHER, SPRING ARANDELA PLANA	4	4	4			
9	90119–08M84	BOLT, WITH WASHER TORNILLO CON ARANDELA	1	1	1			L(20.5") L(20.5")
10	663–45376–00	GUIDE, SEAL DAMPER GUIA DE SELLO GOMA	1	1	1			
11	688–45375–00	DAMPER, SEAL GOMA DE SELLO	1	1	1			
12	67F–45371–00	TAB-TRIM QUILLA ESTABILIZADOR	1	1	1			
13	90105–10M67	BOLT, FLANGE TORNILLO	1	1	1			
14	663–44366–00	DAMPER, WATER SEAL 2 GOMA DEL SELLO DE AGUA 2	1	1	1			
15	90480–19M06	GROMMET TAPON	1	1	1			
16	90160–04006	SCREW, ROUND TAPPING TORNILLO REDONDO ROSCA HEMBRA	2	2	2			
17	688–45987–01	SPACER 1 ESPACIADOR 1	1	1	1			
18	67F–45997–00	SPACER 2 ESPACIADOR 2	1	1	1			
19	90389–25M00	BUSH BUJE	1	1	1			
20	90171–16011	NUT, CASTLE TUERCA ENTALLADA	1	1	1			
21	91490–30025	PIN. COTTER CHAVETA	1	1	1			
22	6E5–45941–00	PROPELLER (3X13"X19"-K) PROPELA (3X13"X19"-K)	1	1	1			UR UR
	6E5–45943–00	PROPELLER (3X12-5/8"X21"-K) PROPELA (3X12-5/8"X21"-K)	1	1	1			UR UR
	6E5–45945–01	PROPELLER (3X13-1/4"X17"-K) PROPELA (3X13-1/4"X17"-K)	1	1	1			UR UR
	6E5–45947–00	PROPELLER (3X13-1/2"X15"-K) PROPELA (3X13-1/2"X15"-K)	1	1	1			UR UR

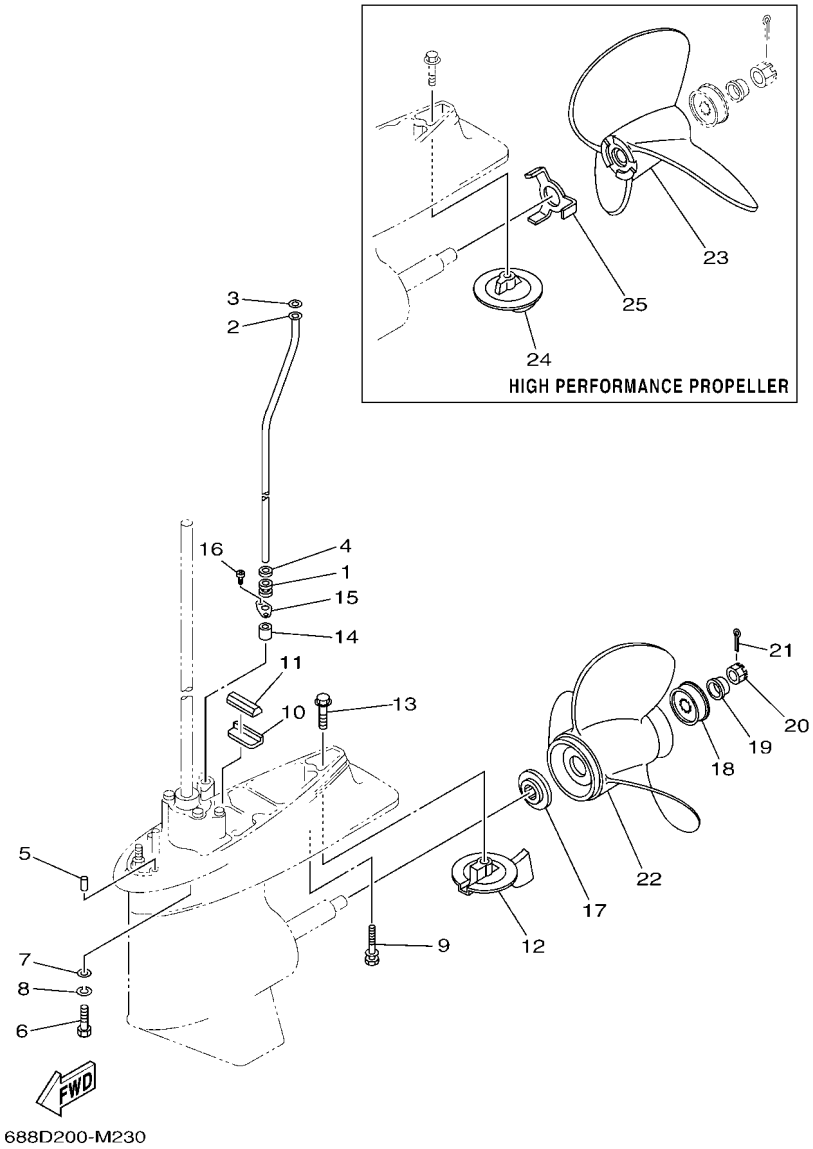

FIG. 23 LOWER CASING & DRIVE 3 — IMPULSOR E INFERIOR 3

REF. NO.	PART NO. CODIGO Nº	DESCRIPTION DESCRIPCION	ET	ED	EHD			REMARKS OBSERVACIONES
22	6E5–45949–00	PROPELLER (3X13-5/8"X13"-K) PROPELA (3X13-5/8"X13"-K)	1	1	1			UR UR
	6E5–45952–00	PROPELLER (3X13"X23"-K) PROPELA (3X13"X23"-K)	1	1	1			UR UR
	6E5–45954–00	PROPELLER (3X14"X11"-K) PROPELA (3X14"X11"-K)	1	1	1			UR UR
	688–45970–03	PROPELLER (3X13"X19"-K) PROPELA (3X13"X19"-K)	1	1	1			UR UR
	688–45972–02	PROPELLER (3X13"X21"-K) PROPELA (3X13"X21"-K)	1	1	1			UR UR
	688–45974–02	PROPELLER (3X13"X23"-K) PROPELA (3X13"X23"-K)	1	1	1			UR UR
	688–45976–01	PROPELLER (3X13"X25"-K) PROPELA (3X13"X25"-K)	1	1	1			UR UR
	688–45978–60	PROPELLER (3X13-1/2"X16"-K) PROPELA (3X13-1/2"X16"-K)	1	1	1			UR UR
	688–45930–02	PROPELLER (3X13"X17"-K2) PROPELA (3X13"X17"-K2)	1	1	1			UR UR
	688–45932–60	PROPELLER (3X13-1/2"X14"-K) PROPELA (3X13-1/2"X14"-K)	1	1	1			UR UR
23	6E5–45970–10	PROPELLER (3X14"X20"-P) PROPELA (3X14"X20"-P)	1	1	1			UR UR
	6E5–45972–10	PROPELLER (3X14"X24"-P) PROPELA (3X14"X24"-P)	1	1	1			UR UR
	6E5–45974–10	PROPELLER (3X14"X28"-P) PROPELA (3X14"X28"-P)	1	1	1			UR UR
	6E5–45976–10	PROPELLER (3X14"X22"-P) PROPELA (3X14"X22"-P)	1	1	1			UR UR
	6E5–45978–10	PROPELLER (3X14"X26"-P) PROPELA (3X14"X26"-P)	1	1	1			UR UR
24	6E5–45371–10	TAB-TRIM QUILLA ESTABILIZADOR	1	1	1			
25	6E5–45994–10	PLATE, TOOTH PLACA	1	1	1			

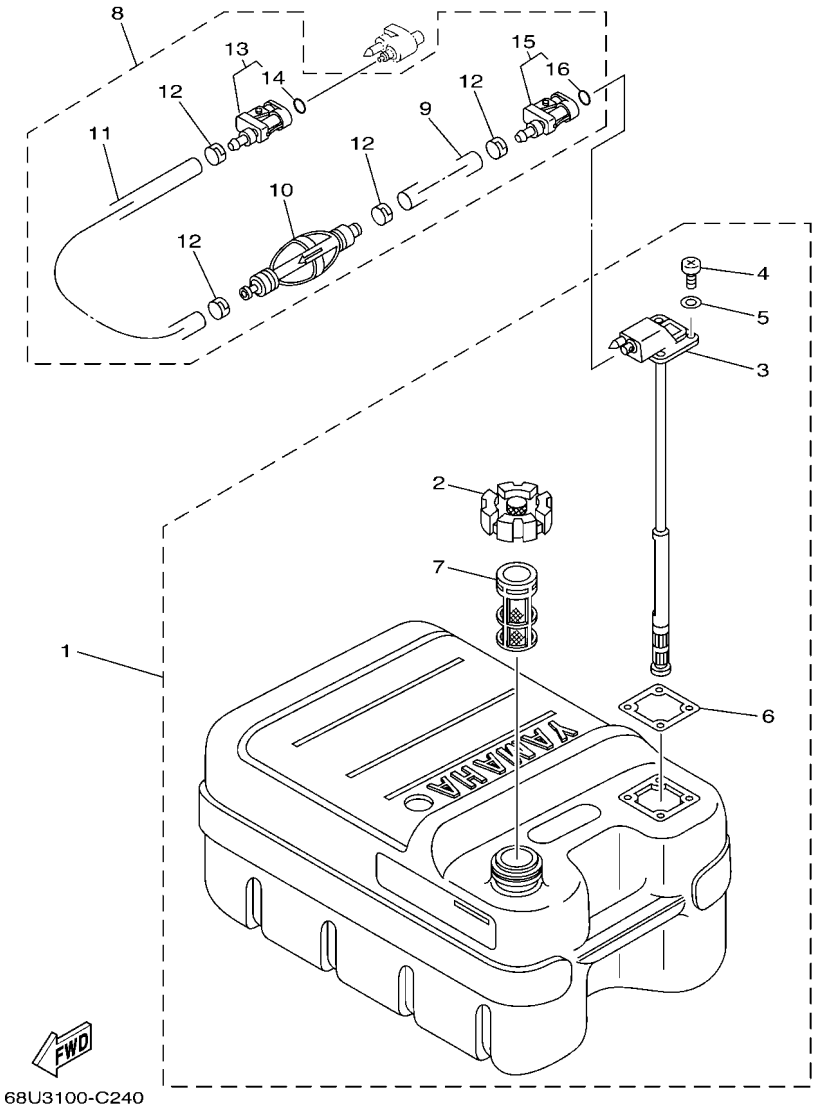

FIG. 24 FUEL TANK — DEPOSITO DE COMBUSTIBLE

REF. NO.	PART NO. CODIGO Nº	DESCRIPTION DESCRIPCION	ET	ED	EHD			REMARKS OBSERVACIONES
1	6YJ–24201–20	FUEL TANK ASSY (24L) TANQUE DEL COMBUSTIBLE (24L)	1	1	1			AP EXCEPT FOR RUS AP EXCEPT FOR RUS
2	6YJ–24610–01	.CAP ASSY .TAPA COMPLETA	1	1	1			
3	6YJ–24260–10	.FUEL METER ASSY .MEDIDOR DE COMBUSTIBLE COMPL.	1	1	1			
4	90157–05M19	.SCREW, PAN HEAD .TORNILLO CABEZA CONICA PLANA	4	4	4			
5	6Y1–24329–00	.SEAL .SELLO	4	4	4			
6	6Y1–24268–00	.GASKET, FUEL METER .EMPAQ MEDIDOR DE COMBUSTIBLE	1	1	1			
7	6YJ–24167–00	.STRAINER .COLADOR	1	1	1			
8	61J–24306–04	FUEL PIPE COMP. 1 TUBO COMBUST. COMPL 1	1	1	1			AP AP
9	90445–11M06	.HOSE (L2050) .MANGUERA (L2050)	1	1	1			
10	61J–24360–00	.PRIMER PUMP ASSY .SOPORTE BOMBA	1	1	1			
11	90445–11M05	.HOSE (L850) .MANGUERA (L850)	1	1	1			
12	650–24351–51	.BAND 1 .ABRAZADERA 1	4	4	4			
13	6G1–24305–05	.FUEL PIPE JOINT COMP. 2 .CONECTOR MANGUERA COMBUST. 2	1	1	1			
14	93210–08287	..O-RING ..ANILLO O	1	1	1			
15	6Y1–24305–06	.FUEL PIPE JOINT COMP. 2 .CONECTOR MANGUERA COMBUST. 2	1	1	1			
16	93210–08287	..O-RING ..ANILLO O	1	1	1			

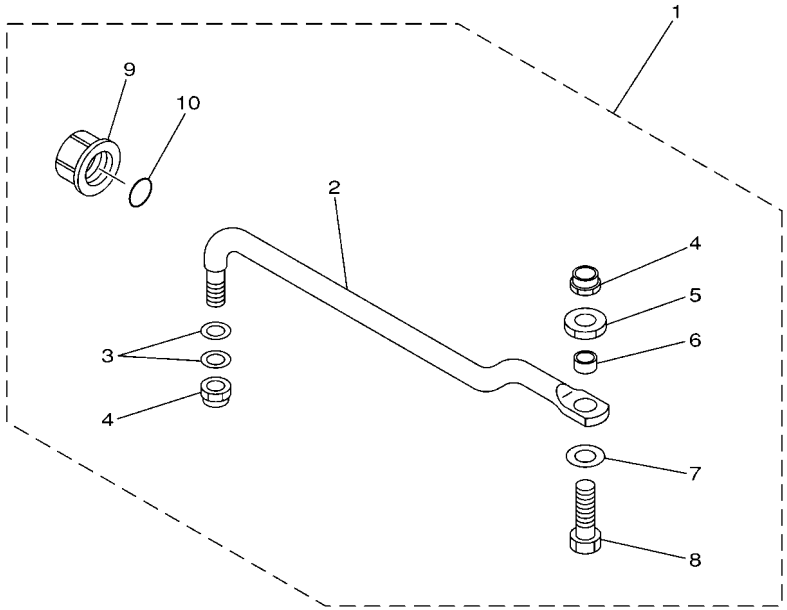

6880700-9190

FIG. 25 STEERING GUIDE — DIRECCIONGUIAR

REF. NO.	PART NO. CODIGO Nº	DESCRIPTION DESCRIPCION	ET	ED	EHD			REMARKS OBSERVACIONES
1	688–61350–10	STEERING GUIDE ATTACHMENT KIT ESTUCHE ADITAMENTO GUIA DE TIM	1					AP AP
2	688–61351–10	.ROD, STEERING LINK .VARILLA ESLABON DIRECCION	1					
3	90201–10M20	.WASHER, PLATE .ARANDELA PLANA	2					
4	90185–09M01	.NUT, SELF-LOCKING .TUERCA AUTOBLOCANTE	2					
5	90170–09M03	.NUT .TUERCA	1					
6	90387–10M42	.COLLAR .ESPACIADOR	1					
7	90201–10M63	.WASHER, PLATE .ARANDELA PLANA	1					
8	6E5–61355–00	.BOLT .TORNILLO	1					
9	6E5–43145–01	.CAP, CLAMP BRACKET .TAPA	1					
10	93210–16275	.O-RING .ANILLO O	1					

FIG. 26 REMOTE CONTROL BOX — CONTROL REMOTO COMPLETO

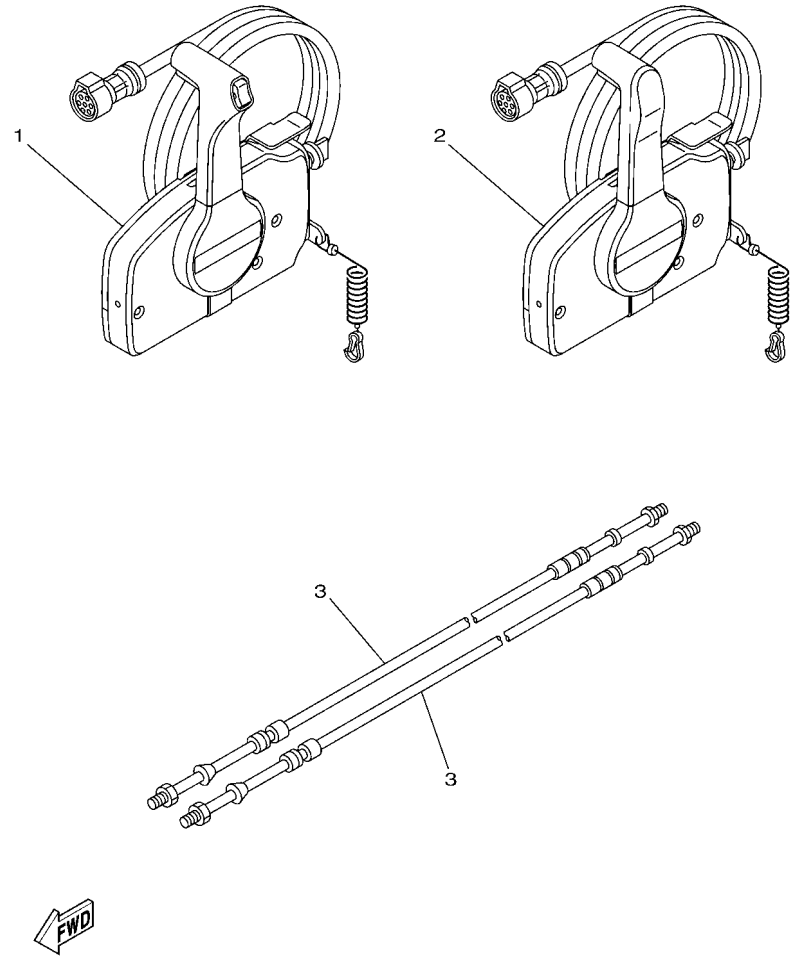

REF. NO.	PART NO. CODIGO Nº	DESCRIPTION DESCRIPCION	ET	ED	EHD			REMARKS OBSERVACIONES
1	703–48205–21	REMOTE CONTROL ASSY (10P, PTT) REMOTO CONTROL COMPL. (10P)	1					AP EXCEPT CHN WITH PT/T SW. AP EXCEPT CHN WITH PT/T SW.
2	703–48203–21	REMOTE CONTROL ASSY (7P) REMOTO CONTROL COMPL. (7P)		1				AP WITHOUT PT/T SW. AP WITHOUT PT/T SW.
3	701–48320–30	CABLE, REMOTE CONTROL L=14F CABLE CONTROL REMOTO L=14F	2	2				UR UR
	701–48320–80	CABLE, REMOTE CONTROL L=17F CABLE CONTROL REMOTO L=17F	2	2				UR UR
	701–48320–70	CABLE, REMOTE CONTROL L=20F CABLE CONTROL REMOTO L=20F	2	2				UR UR

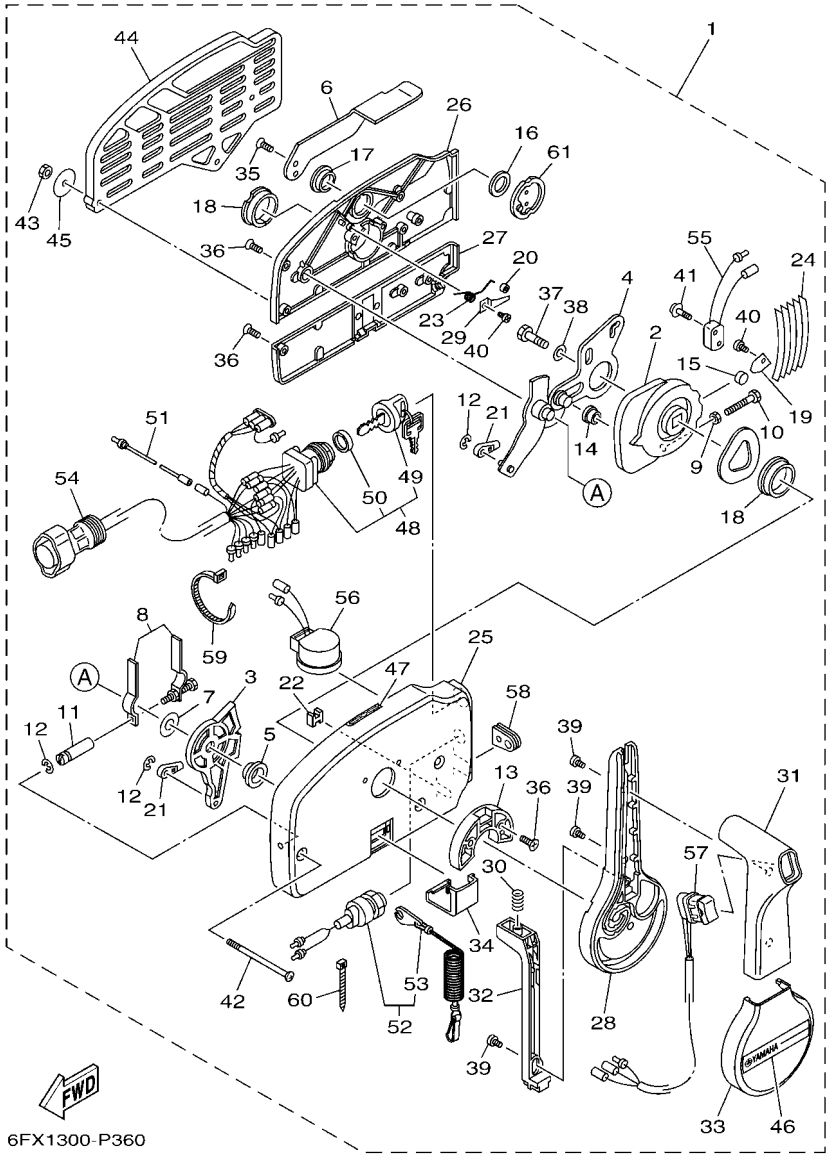

FIG. 27 REMOTE CONTROL ASSY 1 — CONTROL REMOTO COMPL 1

REF. NO.	PART NO. CODIGO Nº	DESCRIPTION DESCRIPCION	ET	ED	EHD			REMARKS OBSERVACIONES
1	703–48205–21	REMOTE CONTROL ASSY (10P, PTT) REMOTO CONTROL COMPL. (10P)	1					AP EXCEPT CHN WITH PT/T SW. AP EXCEPT CHN WITH PT/T SW.
2	703–48232–00	.GEAR .ENGRANAJE 1	1					
3	703–48271–00	.ARM, SHIFT .BRAZO CAMBIADOR	1					
4	703–48261–01	.ARM, THROTTLE .BRAZO ACELERADOR	1					
5	703–48235–00	.BUSHING .BUJE	1					
6	703–48152–10	.KNOB, FREE ACCEL. .PERILLA	1					
7	703–48268–00	.SPACER .ESPACIADOR 3	1					
8	703–48264–00	.FRICTION, THROTTLE .FRICCION DE ACELERADOR	1					
9	95380–05600	.NUT .TUERCA	1					
10	97380–05025	.BOLT .TORNILLO HEXAGONAL	1					
11	703–48265–10	.SHAFT, FRICTION .EJE FRICCION	1					
12	93430–06024	.CIRCLIP .SEGURO	3					
13	703–48245–00	.PLATE, LOCK .PLACA CERRADURA	1					
14	703–48252–00	.ROLLER, CAM .RODILLO LEVA	1					
15	701–48248–00	.ROLLER, FREE ACCEL. .RODILLO ACELERADOR LIBRE	1					
16	703–48198–00	.WASHER, WAVE .RONDANA ONDULADA 3	1					
17	703–48243–00	.BUSHING .BUJE 3	1					
18	703–48236–00	.BUSHING 1 .BUJE	2					
19	703–48189–00	.RETAINER .RETENEDOR	1					
20	703–48234–00	.ROLLER, DETENT .RODILLO	1					
21	703–48345–01	.CABLE END, REMOTE CONTROL 2 .TERMINAL CABLE DE CONTROL REMO	2					
22	703–48358–00	.ANCHOR, CABLE .ABRAZADERA CABLE	1					
23	703–48244–00	.SPRING, FREE ACCEL. .RESORTE ACELERADOR LIBRE	1					
24	703–48238–00	.SPRING, DETENT .RESORTE	5					
25	703–48211–10	.HOUSING,1 .CAJA	1					
26	703–48212–10	.BACK PLATE 1 .PLACA TRASERA 1	1					
27	703–48213–10	.BACK PLATE 2 .PLACA TRASERA 2	1					

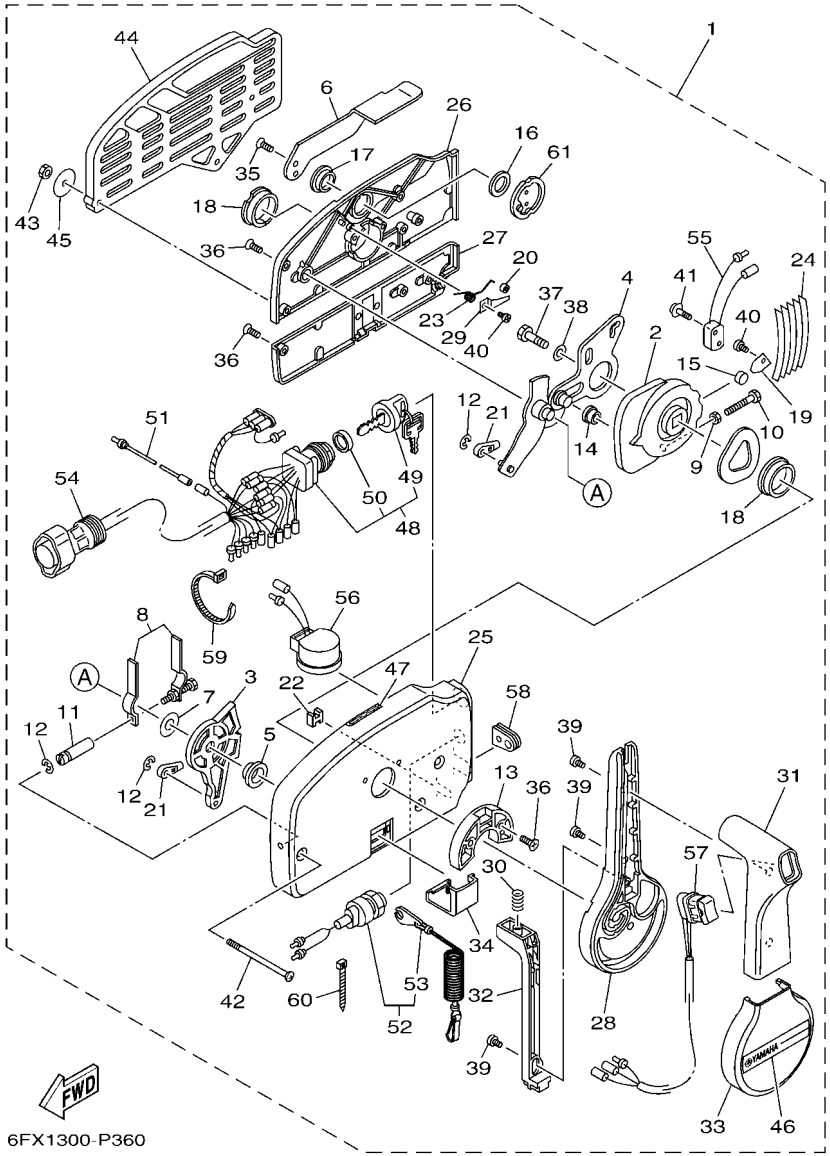

FIG. 27 REMOTE CONTROL ASSY 1 — CONTROL REMOTO COMPL 1

REF. NO.	PART NO. CODIGO Nº	DESCRIPTION DESCRIPCION	ET	ED	EHD			REMARKS OBSERVACIONES
28	703–48221–10	.LEVER, CONTROL .PALANCA CONTROL	1					
29	703–48246–00	.SPACER .ESPACIADOR	1					
30	703–48227–00	.SPRING, NEUTRAL LOCK .RESORTE DE SEGURO	1					
31	703–48222–20	.GRIP, CONTROL LEVER .MANGO DE PALANCA CONTROL	1					SINGLE SINGLE
32	703–48223–10	.LOCK, NEUTRAL .CERRADURA NEUTRO	1					
33	703–48225–10	.COVER .CUBIERTA	1					
34	703–48219–10	.COVER, LEAD .CUBIERTA	1					
35	703–48281–00	.SCREW .TORNILLO 1	2					
36	703–44189–20	.SCREW .TORNILLO	7					
37	97380–08030	.BOLT .TORNILLO HEXAGONAL	1					
38	92990–08600	.WASHER, PLATE .ARANDELA PLANA	1					
39	703–48128–10	.SCREW 2 .TORNILLO 2	3					
40	98580–04006	.SCREW, PAN HEAD .TORNILLO DE CABEZA CRUZADA	2					
41	703–48129–00	.SCREW 3 .TORNILLO 3	2					
42	703–44189–30	.SCREW .TORNILLO	3					
43	95380–06600	.NUT, HEXAGON .TUERCA	3					
44	703–48293–10	.SPACER, REMOTE CONTROL .ESPACIADOR	1					SINGLE SINGLE
45	701–48287–00	.WASHER .ARANDELA	3					
46	703–48215–10	.GRAPHIC .CALCOMANIA 1	1					
47	6X3–44191–00	.INDICATOR, SHIFT .INDICADOR DE CAMBIOS	1					
48	703–82510–44	.MAIN SWITCH ASSY .CONJUNTO DE LLAVE IGNICION	1					
49	703–82577–00	..CAP, KEY ..TAPA	1					
50	6K1–82532–00	..CAP ..TAPA	1					
51	703–82531–00	.WIRE, LEAD (L70) .CABLE CONDUCTOR (L70)	1					
52	688–82575–02	.ENGINE STOP SWITCH ASSY .INTERRUPTOR DE PARADA COMPL	1					
53	682–82556–00	..LANYARD, STOP SWITCH ..CORDON DE INTERRUPTOR PARADA	1					
54	688–8258A–20	.EXTENSION, WIRE HARNESS (4.9M) .EXTENSION, ARNES DE CABLES (4.	1					(10P) (10P)

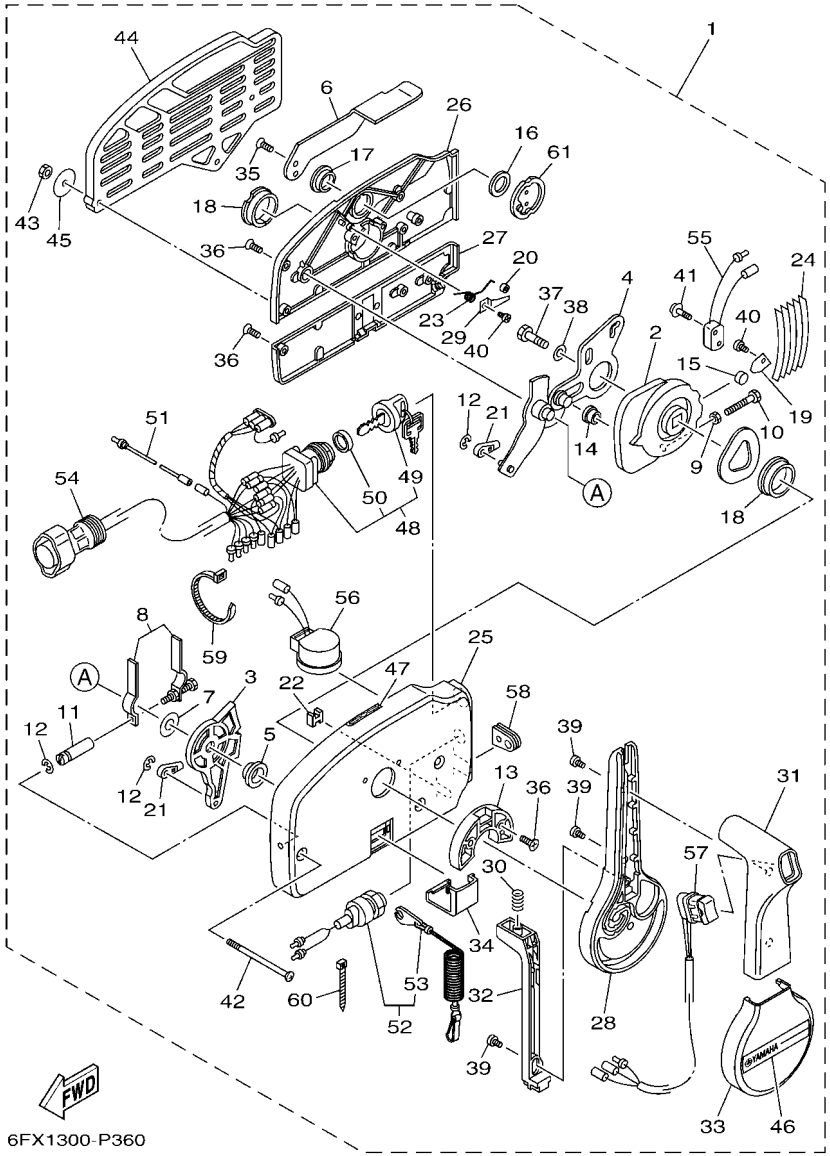

FIG. 27 REMOTE CONTROL ASSY 1 — CONTROL REMOTO COMPL 1

REF. NO.	PART NO. CODIGO Nº	DESCRIPTION DESCRIPCION	ET	ED	EHD			REMARKS OBSERVACIONES
55	703–82540–00	.NEUTRAL SWITCH ASSY .INTERRUPTOR NEUTRAL COMPL	1					
56	703–83383–11	.BUZZER .ZUMBADOR	1					
57	703–82563–30	.TRIM & TILT SWITCH ASSY .INTERRUPTOR DE INCLINACION	1					WITH PT/T SW. WITH PT/T SW.
58	703–48284–00	.GROMMET .TAPON	1					
59	703–82591–00	.BAND .BANDA	1					
60	703–82592–00	.BAND .BANDA	1					
61	703–48153–00	.SHAFT, FREE ACCEL. .EJE	1					

FIG. 28 REMOTE CONTROL ASSY 2 — CONTROL REMOTO COMPL 2

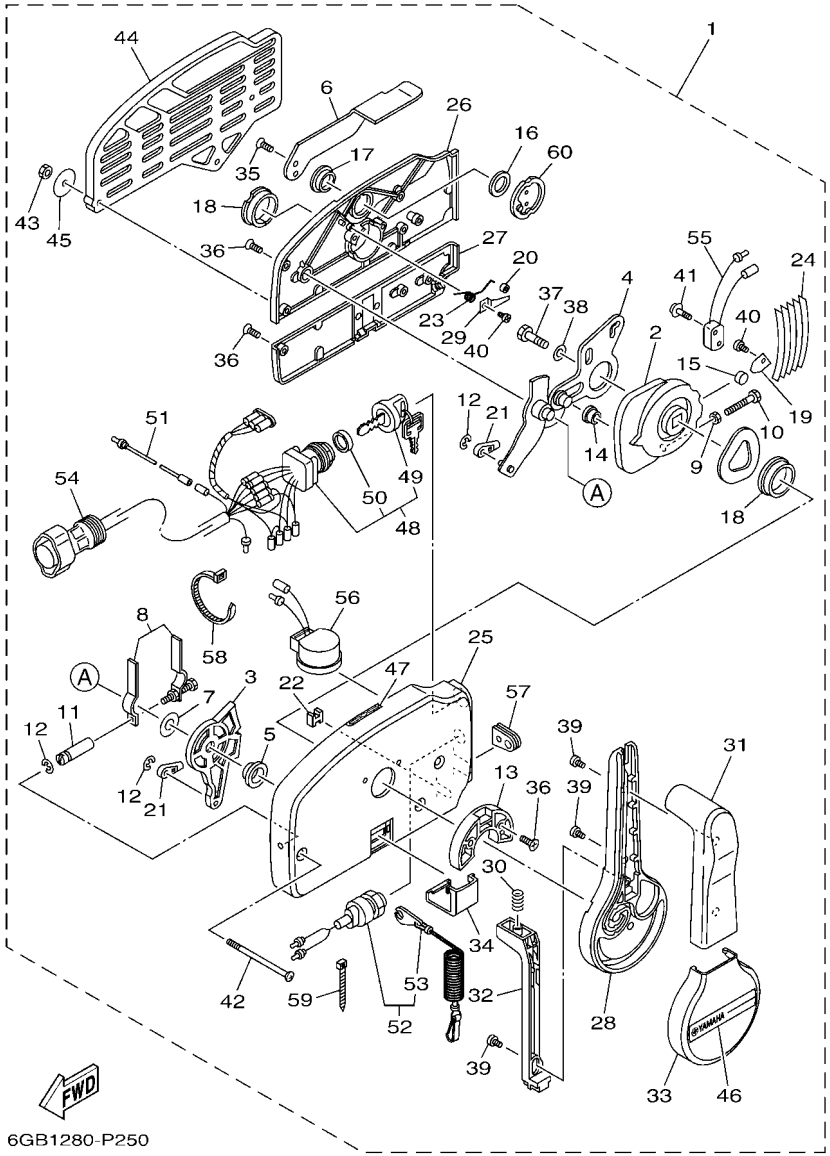

REF. NO.	PART NO. CODIGO Nº	DESCRIPTION DESCRIPCION	ET	ED	EHD			REMARKS OBSERVACIONES
1	703–48203–21	REMOTE CONTROL ASSY (7P) REMOTO CONTROL COMPL. (7P)		1				AP WITHOUT PT/T SW. AP WITHOUT PT/T SW.
2	703–48232–00	.GEAR .ENGRANAJE 1		1				
3	703–48271–00	.ARM, SHIFT .BRAZO CAMBIADOR		1				
4	703–48261–01	.ARM, THROTTLE .BRAZO ACELERADOR		1				
5	703–48235–00	.BUSHING .BUJE		1				
6	703–48152–10	.KNOB, FREE ACCEL. .PERILLA		1				
7	703–48268–00	.SPACER .ESPACIADOR 3		1				
8	703–48264–00	.FRICTION, THROTTLE .FRICCION DE ACELERADOR		1				
9	95380–05600	.NUT .TUERCA		1				
10	97380–05025	.BOLT .TORNILLO HEXAGONAL		1				
11	703–48265–10	.SHAFT, FRICTION .EJE FRICCION		1				
12	93430–06024	.CIRCLIP .SEGURO		3				
13	703–48245–00	.PLATE, LOCK .PLACA CERRADURA		1				
14	703–48252–00	.ROLLER, CAM .RODILLO LEVA		1				
15	701–48248–00	.ROLLER, FREE ACCEL. .RODILLO ACELERADOR LIBRE		1				
16	703–48198–00	.WASHER, WAVE .RONDANA ONDULADA 3		1				
17	703–48243–00	.BUSHING .BUJE 3		1				
18	703–48236–00	.BUSHING 1 .BUJE		2				
19	703–48189–00	.RETAINER .RETENEDOR		1				
20	703–48234–00	.ROLLER, DETENT .RODILLO		1				
21	703–48345–01	.CABLE END, REMOTE CONTROL 2 .TERMINAL CABLE DE CONTROL REMO		2				
22	703–48358–00	.ANCHOR, CABLE .ABRAZADERA CABLE		1				
23	703–48244–00	.SPRING, FREE ACCEL. .RESORTE ACELERADOR LIBRE		1				
24	703–48238–00	.SPRING, DETENT .RESORTE		5				
25	703–48211–10	.HOUSING,1 .CAJA		1				
26	703–48212–10	.BACK PLATE 1 .PLACA TRASERA 1		1				
27	703–48213–10	.BACK PLATE 2 .PLACA TRASERA 2		1				

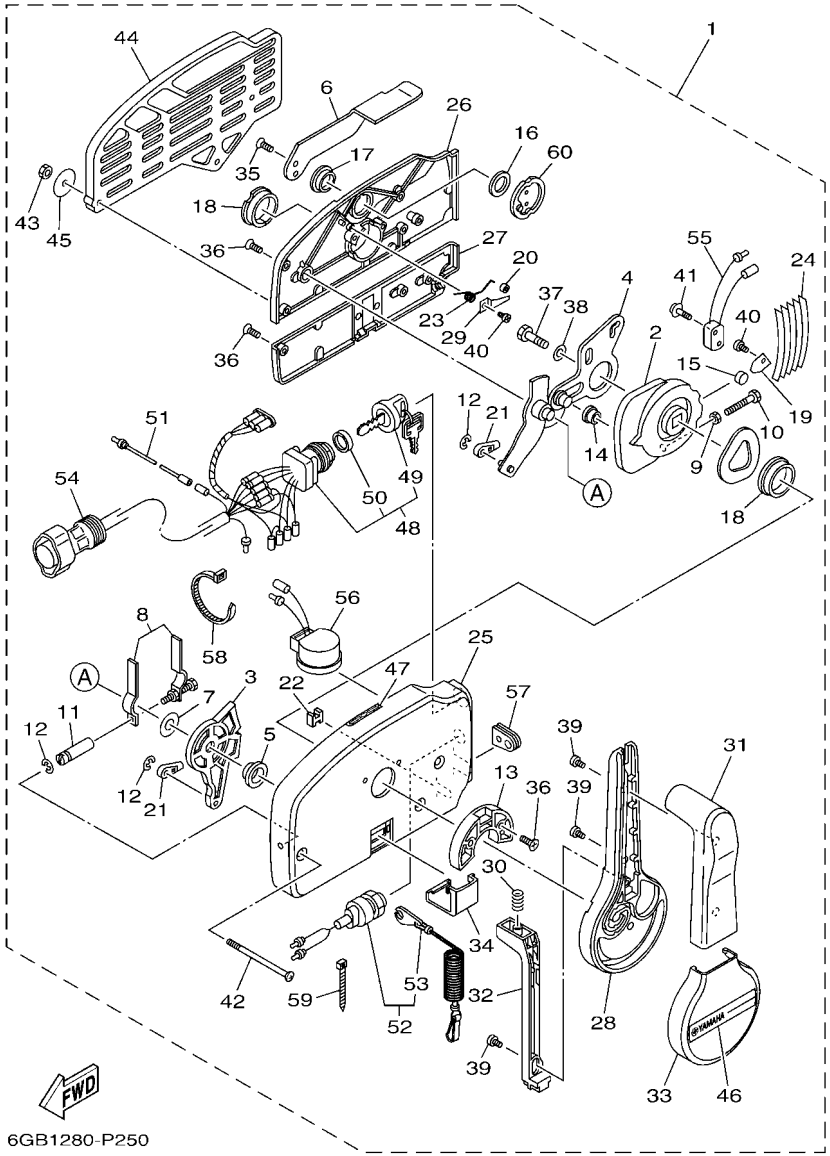

FIG. 28 REMOTE CONTROL ASSY 2 — CONTROL REMOTO COMPL 2

REF. NO.	PART NO. CODIGO Nº	DESCRIPTION DESCRIPCION	ET	ED	EHD			REMARKS OBSERVACIONES
28	703–48221–10	.LEVER, CONTROL .PALANCA CONTROL		1				
29	703–48246–00	.SPACER .ESPACIADOR		1				
30	703–48227–00	.SPRING, NEUTRAL LOCK .RESORTE DE SEGURO		1				
31	703–48222–30	.GRIP, CONTROL LEVER .MANGO DE PALANCA CONTROL		1				SINGLE SINGLE
32	703–48223–10	.LOCK, NEUTRAL .CERRADURA NEUTRO		1				
33	703–48225–10	.COVER .CUBIERTA		1				
34	703–48219–10	.COVER, LEAD .CUBIERTA		1				
35	703–48281–00	.SCREW .TORNILLO 1		2				
36	703–44189–20	.SCREW .TORNILLO		7				
37	97380–08030	.BOLT .TORNILLO HEXAGONAL		1				
38	92990–08600	.WASHER, PLATE .ARANDELA PLANA		1				
39	703–48128–10	.SCREW 2 .TORNILLO 2		3				
40	98580–04006	.SCREW, PAN HEAD .TORNILLO DE CABEZA CRUZADA		2				
41	703–48129–00	.SCREW 3 .TORNILLO 3		2				
42	703–44189–30	.SCREW .TORNILLO		3				
43	95380–06600	.NUT, HEXAGON .TUERCA		3				
44	703–48293–10	.SPACER, REMOTE CONTROL .ESPACIADOR		1				SINGLE SINGLE
45	701–48287–00	.WASHER .ARANDELA		3				
46	703–48215–10	.GRAPHIC .CALCOMANIA 1		1				
47	6X3–44191–00	.INDICATOR, SHIFT .INDICADOR DE CAMBIOS		1				
48	703–82510–34	.MAIN SWITCH ASSY .CONJUNTO DE LLAVE IGNICION		1				
49	703–82577–00	..CAP, KEY ..TAPA		1				
50	6K1–82532–00	..CAP ..TAPA		1				
51	703–82531–00	.WIRE, LEAD (L70) .CABLE CONDUCTOR (L70)		1				
52	688–82575–02	.ENGINE STOP SWITCH ASSY .INTERRUPTOR DE PARADA COMPL		1				
53	682–82556–00	..LANYARD, STOP SWITCH ..CORDON DE INTERRUPTOR PARADA		1				
54	688–82586–21	.EXTENSION, WIRE HARNESS (4.9M) .EXTENSION, ARNES DE CABLES (4.		1				(7P) (7P)

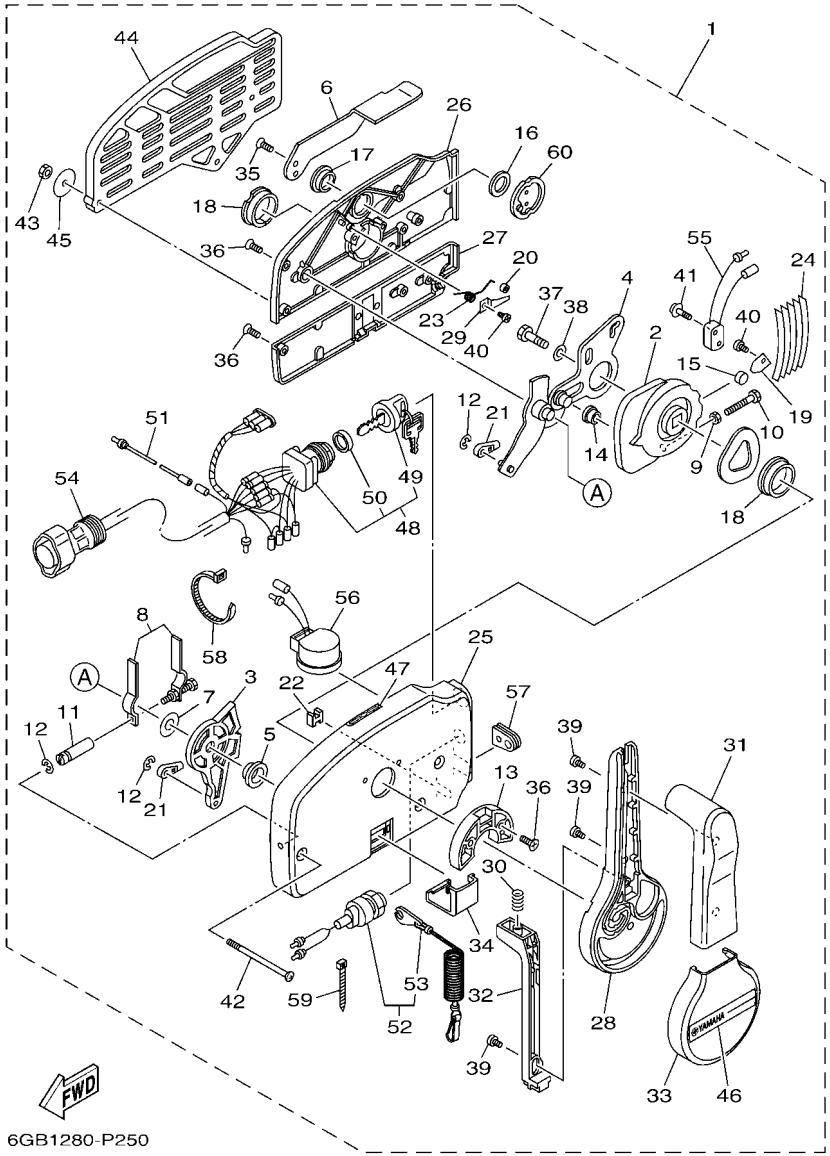

FIG. 28 REMOTE CONTROL ASSY 2 — CONTROL REMOTO COMPL 2

REF. NO.	PART NO. CODIGO Nº	DESCRIPTION DESCRIPCION	ET	ED	EHD			REMARKS OBSERVACIONES
55	703–82540–00	.NEUTRAL SWITCH ASSY .INTERRUPTOR NEUTRAL COMPL		1				
56	703–83383–11	.BUZZER .ZUMBADOR		1				
57	703–48284–00	.GROMMET .TAPON		1				
58	703–82591–00	.BAND .BANDA		1				
59	703–82592–00	.BAND .BANDA		1				
60	703–48153–00	.SHAFT, FREE ACCEL. .EJE		1				

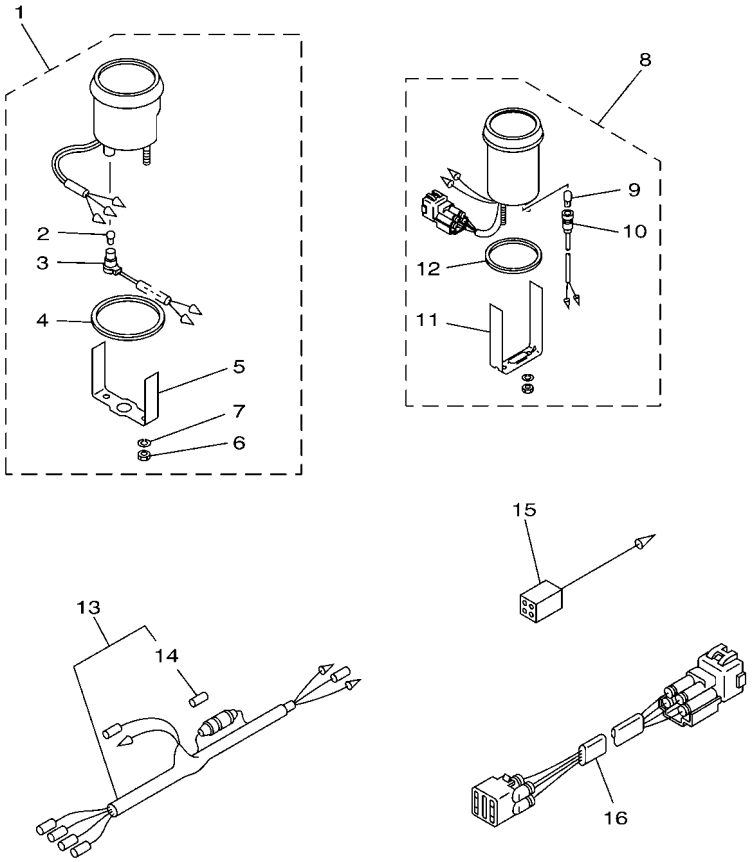

6H37200-G260

FIG. 29 METER MEDIDOR

REF. NO.	PART NO. CODIGO Nº	DESCRIPTION DESCRIPCION	ET	ED	EHD			REMARKS OBSERVACIONES
1	6Y7–83540–20	TACHOMETER ASSY TACOMETRO COMPLETO	1					AP 85A-CHN,RUS WITHOUT OIL LAMP AP 85A-CHN,RUS WITHOUT OIL LAMP
2	6Y5–83517–00	.BULB (T10, 12V-1.7W) .BOMBILLA (T10, 12V-1.7W)	1					
3	6Y5–83536–40	.SOCKET, METER .ENCASTRE DE MEDIDOR	1					
4	6Y5–83523–00	.DAMPER .AMORTIGUADOR	1					
5	6Y5–83514–00	.PLATE, FITTING .PLACA ACCESORIA	1					
6	95380–05600	.NUT .TUERCA	2					
7	92990–05100	.WASHER, SPRING .ARANDELA PLANA	2					
8	6Y7–83670–00	TRIM METER ASSY. MEDIDOR DE INCLINACION	1					AP AP
9	6Y5–83518–00	.BULB (12V-1.7W T6.5) .BOMBILLA (12V-1.7W T6.5)	1					
10	6Y5–83536–00	.SOCKET, METER .ENCASTRE DE MEDIDOR	1					
11	6Y5–83544–00	.PLATE, FITTING .PLACA ACCESORIA	1					
12	688–83664–00	.DAMPER .AMORTIGUADOR	1					
13	6Y5–83553–00	WIRE, LEAD (L=2.5M) CABLE CONDUCTOR (L=2.5M)	1					AP AP
14	1E6–82151–00	.FUSE (10A) .FUSIBLE (10A)	1					
15	6Y5–82117–00	WIRE, LEAD (BLACK) (L300) CABLE, CONDUCTOR (NEGRO)	1					AP 85A-CHN,RUS AP 85A-CHN,RUS
16	6R3–82553–70	EXTENSION, WIRE LEAD (L=7.0M) CABLE (L=7.0M)	1					AP (4P) AP (4P)

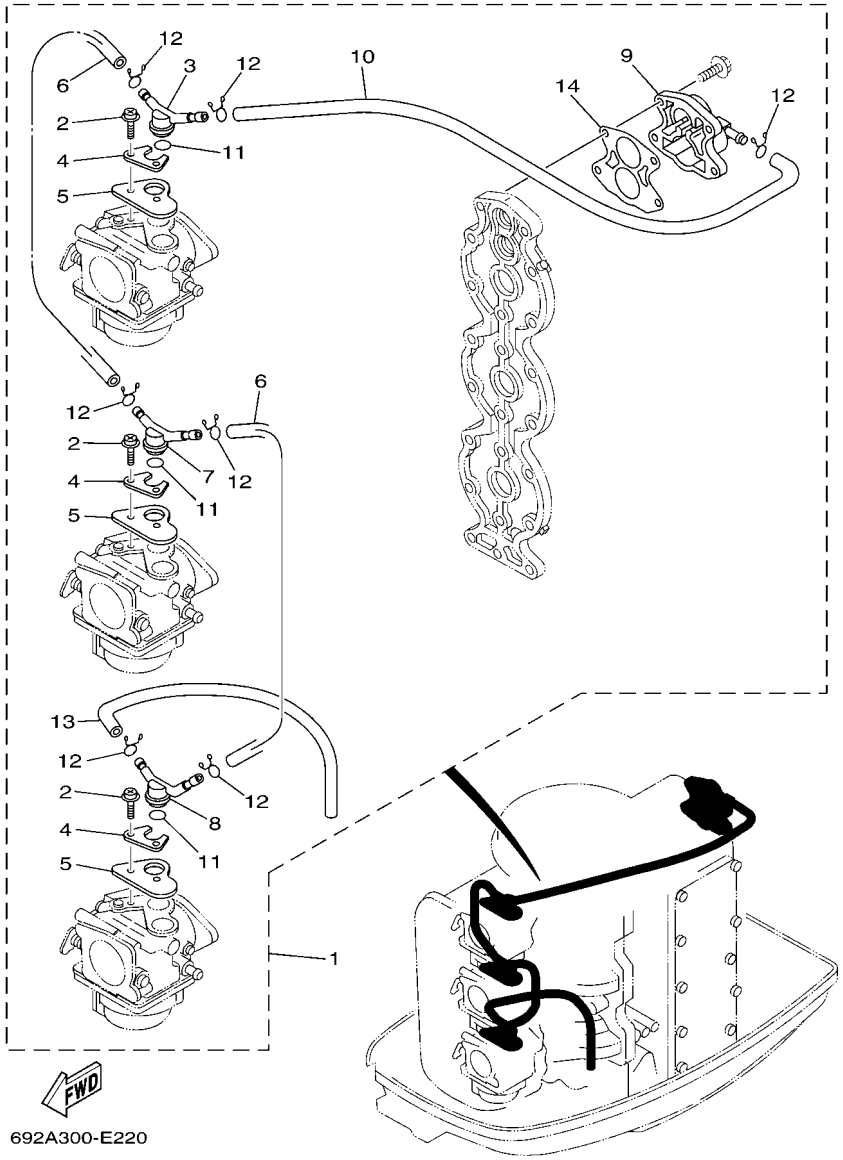

692A300-E220

FIG. 30 OPTIONAL PARTS — PARTES OPCIONALES

REF. NO.	PART NO. CODIGO Nº	DESCRIPTION DESCRIPCION	ET	ED	EHD			REMARKS OBSERVACIONES
1	688–12440–51	HEAT EXCHANGER ASSY INTERCAMBIADOR DE CALOR COMPL	1	1	1			AP AP
2	97980–05114	.SCREW, WITH WASHER .TORNILLO, CON ARANDELA	6	6	6			
3	6H1–14969–50	.CAP .TAPA	1	1	1			
4	6H1–14945–50	.PLATE .PLACA	3	3	3			
5	6H1–14572–50	.PLATE, STAY .PLACA DE SOPORTE	3	3	3			
6	90445–11M01	.HOSE (L180) .TUBO (L180)	2	2	2			
7	6H1–14169–50	.CAP .FUNDA	1	1	1			
8	6H1–14968–50	.CAP .TAPA	1	1	1			
9	6H1–12413–50	.COVER, THERMOSTAT .CUBIERTA TERMOSTATO	1	1	1			
10	6H1–14348–51	.PIPE 1 .MANGUERA	1	1	1			
11	93210–15M52	.O-RING .ANILLO O	3	3	3			
12	90467–10M04	.CLIP .PRESILLA	7	7	7			
13	6E5–12481–00	.PIPE 1 .TUBO 1	1	1	1			
14	6H1–12414–50	.GASKET, COVER .EMPAQUE	1	1	1			

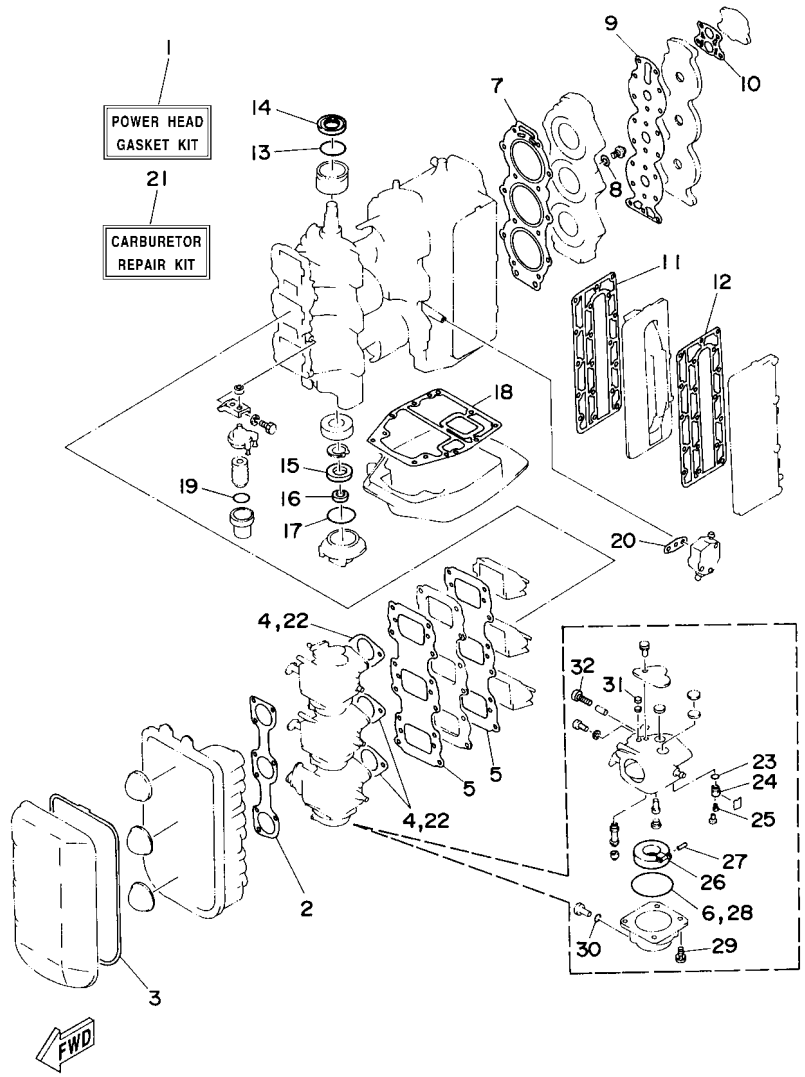

FIG. 31 REPAIR KIT 1 — ESTUCHE REPARATION 1

REF. NO.	PART NO. CODIGO Nº	DESCRIPTION DESCRIPCION	ET	ED	EHD			REMARKS OBSERVACIONES
1	688–W0001–02	POWER HEAD GASKET KIT JUEGO DE EMPAQUE	1	1	1			
2	688–14483–A0	.GASKET .EMPAQUE	1	1	1			
3	688–14416–01	.GASKET, AIR CLEANER .EMPAQUE	1	1	1			
4	688–14198–A2	.GASKET .EMPAQUE	3	3	3			
5	688–13621–A1	.GASKET, VALVE SEAT .JUNTA, DE VALV.DE EMPAQUE	2	2	2			
6	676–14984–00	.GASKET, FLOAT CHAMBER .EMPAQUE CAMARA DE BOIA	3	3	3			
7	688–11181–A2	.GASKET, CYLINDER HEAD 1 .JUNTA, DE CULATA 1	1	1	1			
8	90430–14115	.GASKET .JUNTA	1	1	1			
9	688–11193–A1	.GASKET, HEAD COVER 1 .EMPAQUE	1	1	1			
10	688–12414–A1	.GASKET, COVER .EMPAQUE	1	1	1			
11	688–41112–A0	.GASKET, EXHAUST INNER COVER .EMPAQUE	1	1	1			
12	688–41114–A0	.GASKET, EXHAUST OUTER COVER .EMPAQUE	1	1	1			
13	93210–46M16	.O-RING .ANILLO O	1	1	1			
14	93102–36M02	.OIL SEAL .SELLO ACEITE	1	1	1			
15	93102–30M05	.OIL SEAL .SELLO ACEITE	1	1	1			
16	93104–20M02	.OIL SEAL .SELLO ACEITE	1	1	1			
17	93210–62269	.O-RING .ANILLO O	1	1	1			
18	688–45113–A0	.GASKET, UPPER CASING .EMPAQUE	1	1	1			
19	93210–32738	.O-RING .ANILLO O	1	1	1			
20	650–24431–A0	.GASKET, FUEL PUMP 1 .EMPAQUE BOMBA COMBUST 1	1	1	1			
21	6H1–W0093–01	CARBURETOR REPAIR KIT KIT REPARACION CARBURADOR	1	1	1			
22	688–14198–A2	.GASKET .EMPAQUE	3	3	3			
23	93210–04228	.O-RING .ANILLO O	3	3	3			
24	692–14590–01	.NEEDLE VALVE ASSY .VALVULA DE AGUJA COMPLETA	3	3	3			
25	676–14186–00	.PIN, FLOAT .PASADOR DE LA BOYA	3	3	3			
26	676–14985–01	.FLOAT .BOIA	3	3	3			
27	688–14548–00	.PIN, FLOAT ARM .PASADOR DE BRAZO DE BOIA	3	3	3			

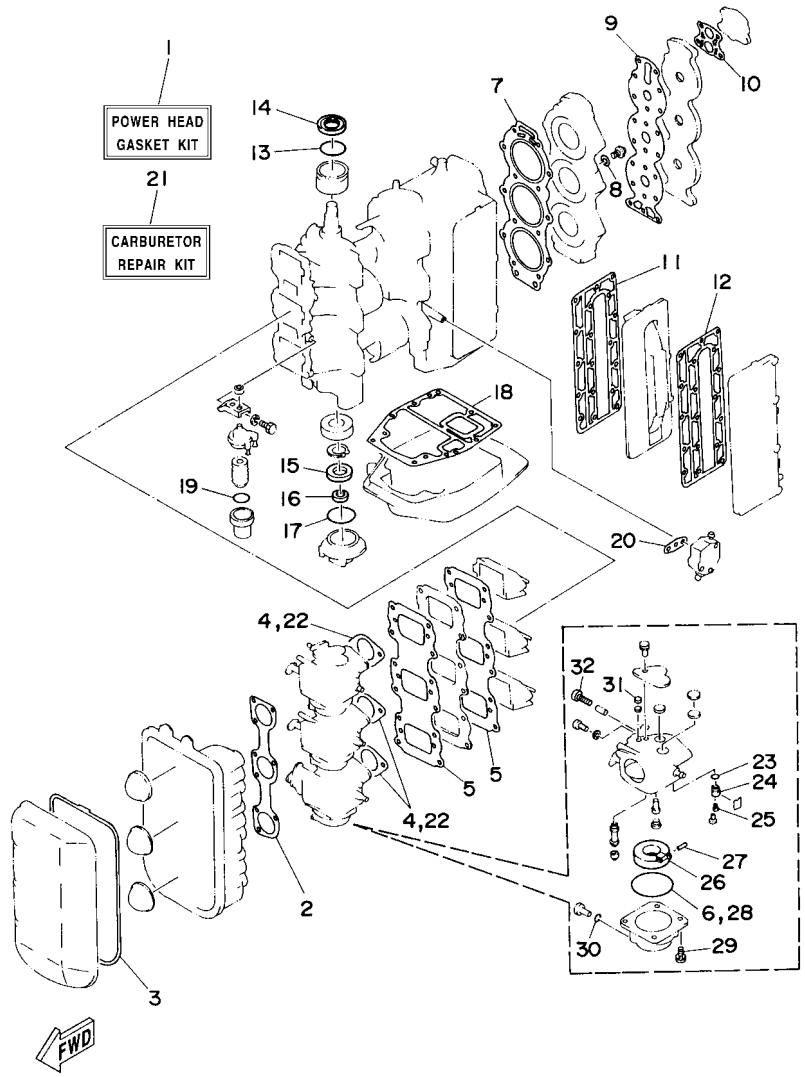

FIG. 31 REPAIR KIT 1 — ESTUCHE REPARATION 1

REF. NO.	PART NO. CODIGO Nº	DESCRIPTION DESCRIPCION	ET	ED	EHD			REMARKS OBSERVACIONES
28	676–14984–00	.GASKET, FLOAT CHAMBER .EMPAQUE CAMARA DE BOIA	3	3	3			
29	97980–04114	.SCREW, WITH WASHER .TORNILLO, CON ARANDELA	3	3	3			
30	93210–04230	.O-RING .ANILLO O	3	3	3			
31	663–14126–00	.GASKET .EMPAQUE	3	3	3			
32	692–14923–00	.SCREW, PILOT .TORNILLO DE AJUSTE	3	3	3			

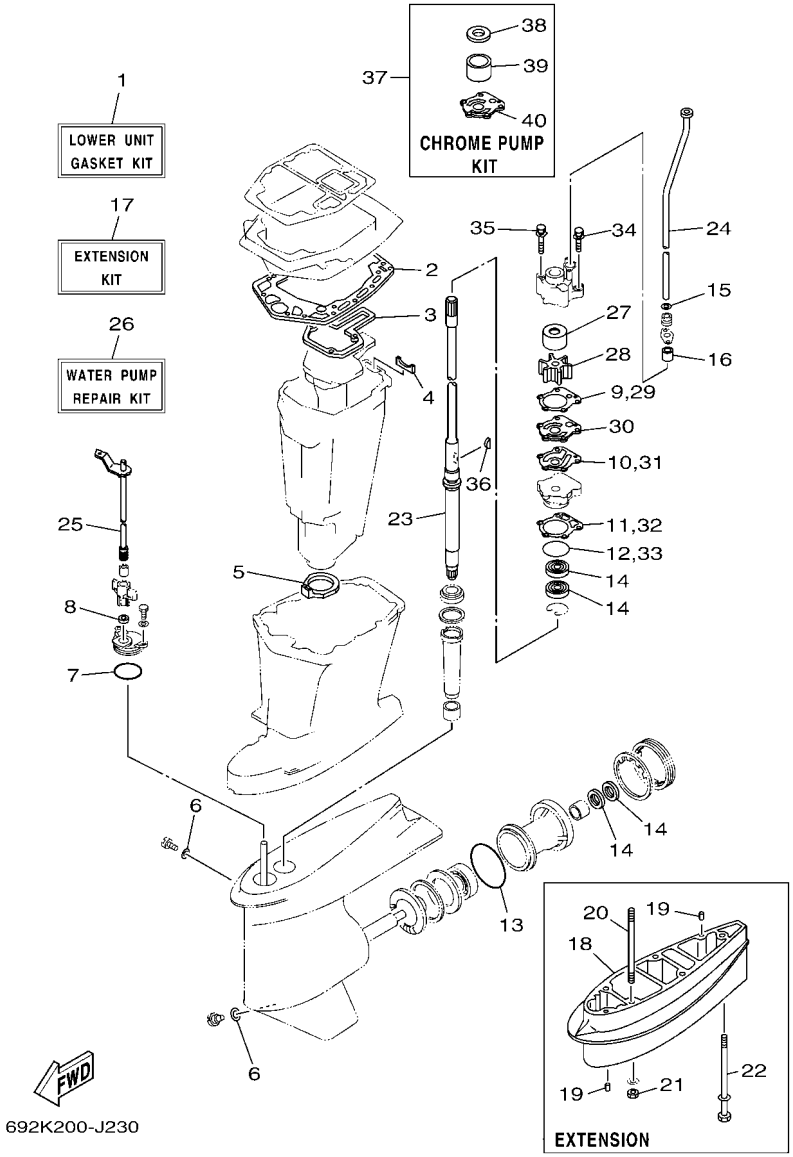

FIG. 32 REPAIR KIT 2 — ESTUCHE REPARATION 2

REF. NO.	PART NO. CODIGO Nº	DESCRIPTION DESCRIPCION	ET	ED	EHD			REMARKS OBSERVACIONES
1	688–W0001–22	LOWER UNIT GASKET KIT JUEGO DE EMPAQUE UNIDAD INFER.	1	1	1			
2	688–45114–A1	.GASKET, UPPER CASING .EMPAQUE	1	1	1			
3	688–41134–A0	.GASKET, EXHAUST MANIFOLD .EMPAQUE	1	1	1			
4	688–41133–00	.GASKET, EXHAUST MANIFOLD 1 .EMPAQUE ESCAPE MULTIPLE	1	1	1			
5	688–45123–00	.GASKET, MUFFLER .EMPAQUE SILENCIADOR	1	1	1			
6	90430–08003	.GASKET .JUNTA	2	2	2			
7	93210–49046	.O-RING .ANILLO O	1	1	1			
8	93106–09014	.OIL SEAL .SELLO ACEITE	1	1	1			
9	688–44315–A0	.GASKET, WATER PUMP .EMPAQUE	1	1	1			
10	688–44324–A0	.GASKET, CARTRIDGE .EMPAQUE	1	1	1			
11	688–44316–A0	.GASKET, WATER PUMP .EMPAQUE	1	1	1			
12	93210–46044	.O-RING .ANILLO O	1	1	1			
13	93210–85M97	.O-RING .ANILLO O	1	1	1			
14	93101–25M03	.OIL SEAL .SELLO ACEITE	4	4	4			
15	90430–12072	.GASKET .JUNTA	1	1	1			
16	663–44366–00	.DAMPER, WATER SEAL 2 .GOMA DEL SELLO DE AGUA 2	1	1	1			
17	688–W0072–00–8D	EXTENSION KIT ESTUCHE PARA EXTENSION	1	1	1			X(25.5") X(25.5")
18	688–45211–01–8D	.EXTENSION .EXTENSION	1	1	1			
19	93606–12019	.PIN, DOWEL .PASADOR DE CLAVIJA	4	4	4			
20	90116–10M05	.BOLT, STUD .ESPARRAGO	4	4	4			
21	95380–10600	.NUT .TUERCA	4	4	4			
22	90119–08M86	.BOLT, WITH WASHER .TORNILLO CON ARANDELA	1	1	1			
23	688–45501–22	.DRIVE SHAFT COMP. .EJE DE MANDO COMPL.	1	1	1			
24	688–44361–20	.TUBE, WATER 1 .TUBO DE AGUA 1	1	1	1			
25	688–44120–22	.HANDLE GEAR SHIFT ASSY .MANIJA DE CAMBIO COMPL	1	1	1			
26	692–W0078–02	WATER PUMP REPAIR KIT ESTUCHE REPARACION BOMBA AGUA	1	1	1			
27	688–44322–00	.INSERT, CARTRIDGE .CARTUCHO	1	1	1			

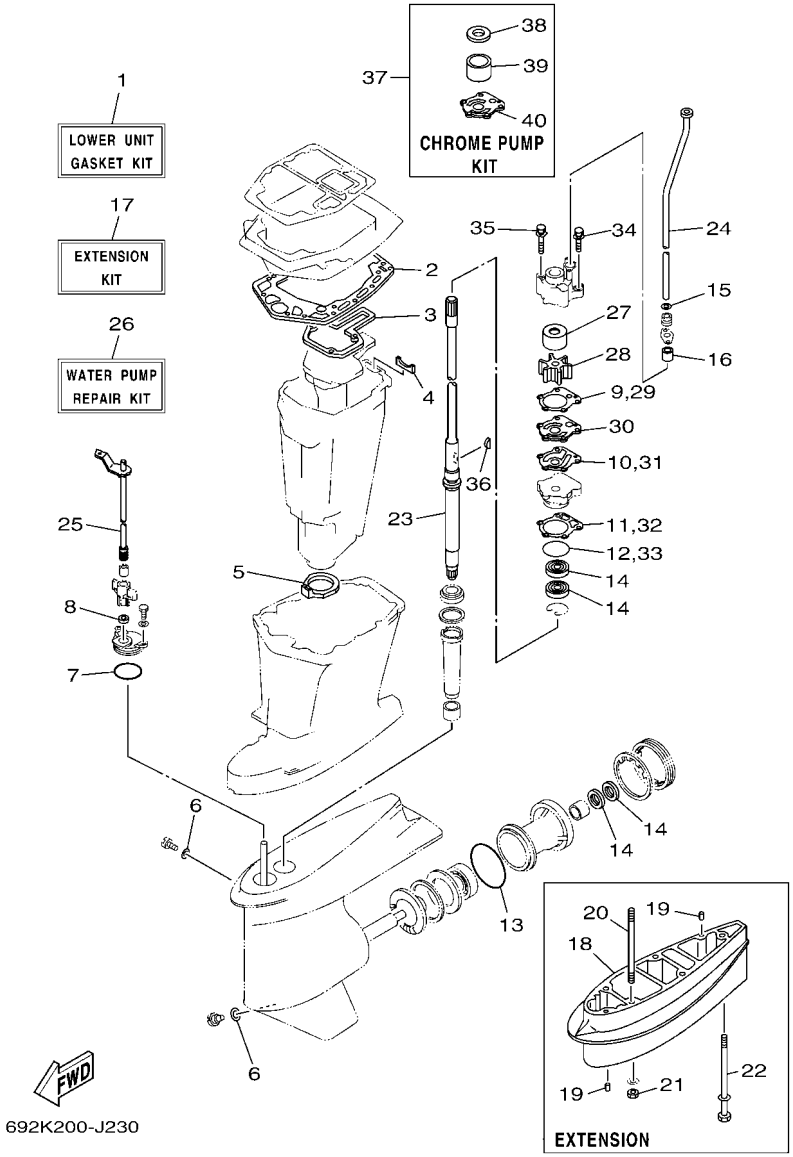

692K200-J230

FIG. 32 REPAIR KIT 2 — ESTUCHE REPARATION 2

REF. NO.	PART NO. CODIGO Nº	DESCRIPTION DESCRIPCION	ET	ED	EHD			REMARKS OBSERVACIONES
28	688–44352–03	.IMPELLER .IMPULSOR	1	1	1			
29	688–44315–A0	.GASKET, WATER PUMP .EMPAQUE	1	1	1			
30	688–44323–00	.OUTER PLATE, CARTRIDGE .PLACA EXTERIOR DEL CARTUCHO	1	1	1			
31	688–44324–A0	.GASKET, CARTRIDGE .EMPAQUE	1	1	1			
32	688–44316–A0	.GASKET, WATER PUMP .EMPAQUE	1	1	1			
33	93210–46044	.O-RING .ANILLO O	1	1	1			
34	90119–08M13	.BOLT, WITH WASHER .TORNILLO CON ARANDELA	2	2	2			
35	90119–08M16	.BOLT, WITH WASHER .TORNILLO CON ARANDELA	2	2	2			
36	90280–04M04	.KEY, WOODRUFF .CUNA WOODRUFF	1	1	1			
37	688–W0078–1A	CHROME PUMP KIT ESTUCHE REPARACION BOMBA AGUA	1	1	1			
38	688–44321–41	.INNER PLATE, CARTRIDGE .PLACA INTERIOR CARTUCHO	1	1	1			
39	688–44322–41	.INSERT, CARTRIDGE .CARTUCHO	1	1	1			
40	688–44323–40	.OUTER PLATE, CARTRIDGE .PLACA EXTERIOR DEL CARTUCHO	1	1	1			

NUMERICAL INDEX
INDICE NUMERICO

PART NO. CODIGO Nº	REF. NO.
692–11111–01–1S	3 – 27
688–11111–02–1S	3 – 27
688–11119–01	3 – 25
688–11181–A2	3 – 28
	31 – 7
688–11191–00–1S	3 – 32
688–11193–A1	3 – 33
	31 – 9
688–11325–00	1 – 1
	3 – 23
650–11370–01	3 – 4
688–11370–01	3 – 3
	4 – 2
688–11411–01	4 – 11
663–11518–01	3 – 6
688–11603–A0	4 – 19
688–11604–A0	4 – 19
688–11605–A0	4 – 19
688–11631–03–94	4 – 18
663–11633–00	4 – 20
688–11634–00	4 – 21
688–11635–03	4 – 18
688–11636–03	4 – 18
688–11650–03	4 – 22
688–12411–11	1 – 2
	3 – 38
688–12412–00	3 – 39
688–12413–00–1S	3 – 40
6H1–12413–50	30 – 9
6H1–12414–50	30 – 14
688–12414–A1	1 – 3
	3 – 41
	31 – 10
688–12416–00	3 – 36
688–12440–51	30 – 1
6E5–12481–00	30 – 13
688–13610–00	5 – 13
692–13610–00	5 – 13
688–13621–A1	5 – 11
	31 – 5
688–13624–00	5 – 12
688–13641–01	5 – 6
663–14126–00	6 – 20
	31 – 31
688–14126–00	6 – 22
663–14159–00	6 – 10
6H1–14169–50	30 – 7
676–14186–00	6 – 11

PART NO. CODIGO Nº	REF. NO.
676–14186–00	31 – 25
688–14198–A2	5 – 8
	31 – 4
	31 – 22
692–14301–26	6 – 1
688–14301–40	6 – 1
692–14302–26	6 – 2
688–14302–40	6 – 2
692–14303–26	6 – 3
688–14303–40	6 – 3
6A0–14325–00	7 – 25
6H1–14348–51	30 – 10
688–14416–01	5 – 24
	31 – 3
688–14417–01	5 – 19
688–14418–01	5 – 23
688–14481–00	5 – 22
688–14483–A0	5 – 20
	31 – 2
624–14485–00	3 – 5
63V–14523–00	6 – 30
663–14527–00	6 – 21
688–14527–00	6 – 23
688–14548–00	6 – 14
	31 – 27
679–14555–00	6 – 27
688–14572–01	6 – 24
6H1–14572–50	30 – 5
6H2–14578–00	6 – 32
692–14590–01	6 – 9
	31 – 24
6K5–14592–00	6 – 28
688–14711–01–CA	20 – 10
688–14711–10–CA	20 – 10
663–14737–10	20 – 12
692–14923–00	6 – 26
	31 – 32
676–14943–40	6 – 5
676–14943–42	6 – 5
6H1–14945–50	30 – 4
688–14947–00	6 – 4
692–14947–00	6 – 4
676–14948–18	6 – 6
676–14948–19	6 – 6
676–14966–00	6 – 7
6H1–14968–50	30 – 8
6H1–14969–50	30 – 3
688–14980–00	6 – 16

PART NO. CODIGO Nº	REF. NO.
676–14984–00	6 – 15
	31 – 6
	31 – 28
676–14985–01	6 – 13
	31 – 26
6H3–14992–00	6 – 18
688–15100–07	3 – 2
6H1–15359–01–94	4 – 1
688–15379–00	4 – 6
6YJ–24167–00	24 – 7
6YJ–24201–20	24 – 1
6YJ–24260–10	24 – 3
6Y1–24268–00	24 – 6
6G1–24304–10	7 – 1
6G1–24305–05	24 – 13
6Y1–24305–06	24 – 15
61J–24306–04	24 – 8
663–24312–01	3 – 47
688–24313–00	7 – 33
688–24314–00	7 – 34
6Y1–24329–00	24 – 5
650–24351–51	24 – 12
61J–24360–00	24 – 10
6E5–24367–01	12 – 28
688–24378–00	7 – 37
692–24410–00	7 – 15
663–24411–00	7 – 20
692–24411–00	7 – 17
6A0–24412–02	7 – 26
6A0–24413–00	7 – 16
6A0–24421–01	7 – 24
650–24431–A0	7 – 27
	31 – 20
648–24434–01	7 – 18
648–24435–02	7 – 21
68V–24469–01	7 – 10
68V–24521–01	7 – 7
64J–24560–00	7 – 6
61N–24563–00	1 – 5
	7 – 8
648–24566–02	7 – 11
6YJ–24610–01	24 – 2
692–26301–03	13 – 20
6E0–28193–00	7 – 39
688–41111–00–1S	3 – 43
688–41112–A0	3 – 44
	31 – 11
688–41113–00–1S	3 – 46

PART NO. CODIGO Nº	REF. NO.
688–41114–A0	3 – 45
	31 – 12
688–41131–00–CA	20 – 8
688–41131–10–CA	20 – 8
688–41133–00	20 – 9
	32 – 4
688–41134–A0	20 – 7
	32 – 3
688–41137–03–CA	20 – 5
688–41211–01	14 – 28
688–41213–01	14 – 31
662–41214–01	14 – 8
688–41217–01	5 – 3
682–41237–00	14 – 27
	14 – 30
682–41237–50	14 – 25
692–41256–01	5 – 1
688–41257–01	5 – 4
6J8–41262–00	17 – 4
661–41262–02	5 – 5
689–41273–00	5 – 2
688–41611–00	8 – 10
688–41612–00	8 – 11
688–41631–01–1S	14 – 18
688–41632–01–1S	14 – 7
692–42111–12–8D	13 – 2
692–42115–00	13 – 11
664–42119–00	13 – 3
692–42121–02–8D	13 – 21
663–42126–01	13 – 46
663–42133–01	13 – 15
692–42134–03–8D	13 – 16
692–42135–00	13 – 14
692–42137–02	13 – 5
663–42138–00	13 – 12
692–42164–00	13 – 41
6G1–42177–00	13 – 4
688–42510–03–8D	18 – 3
688–42610–11	2 – 1
692–42610–71	2 – 1
688–42613–01–8D	2 – 11
688–42615–00	2 – 18
688–42618–00	2 – 12
688–4261A–10	2 – 2
688–42628–00	2 – 13
688–42647–00	2 – 3
688–42649–00	2 – 4
688–42652–10	2 – 6

PART NO. CODIGO Nº	REF. NO.
663–42662–00	2 – 5
688–42675–40	2 – 20
688–42676–40	2 – 21
688–42678–40	2 – 19
	2 – 22
692–42678–40	2 – 19
	2 – 22
688–42681–40	2 – 23
	2 – 24
692–42711–03–8D	12 – 1
688–42711–05–8D	12 – 1
648–42715–00	14 – 50
688–42716–02	12 – 9
663–42724–00	12 – 10
692–42725–00	12 – 11
688–42725–02	12 – 11
688–42725–10	12 – 11
6H4–42726–00	12 – 22
688–42726–10	12 – 22
688–42738–01–8D	12 – 12
688–42741–01–8D	12 – 23
6BG–42748–00	12 – 15
688–42771–01–8D	12 – 24
6EE–42794–40	12 – 32
688–42815–01–8D	12 – 3
688–42816–00	12 – 7
688–42817–01–8D	12 – 4
688–43107–05–8D	17 – 7
6H1–43111–01–8D	15 – 1
688–43111–13–8D	16 – 1
6H1–43112–00–8D	15 – 10
688–43112–12–8D	16 – 8
688–43124–02	17 – 12
6E5–43126–10	15 – 36
	16 – 35
688–43128–01–8D	17 – 1
688–43131–03	15 – 17
	16 – 15
6G5–43144–00	15 – 30
	16 – 29
6E5–43145–01	25 – 9
6G5–43145–01	15 – 21
	16 – 19
6G5–43148–00	15 – 25
	16 – 24
688–43160–01	15 – 32
	16 – 31
688–43165–00	15 – 33

PART NO. CODIGO Nº	REF. NO.
688–43165–00	16 – 32
6H1–43181–01	15 – 22
688–43181–10	16 – 20
6H1–43185–01	15 – 23
688–43185–10	16 – 21
688–43186–00	17 – 2
6H1–43311–02–8D	15 – 15
	16 – 13
663–43318–00	16 – 22
682–43318–01	17 – 10
6H1–43376–00	18 – 39
688–43616–00	17 – 5
688–43631–10	17 – 8
688–43651–00	17 – 9
697–43662–00	14 – 56
6H1–43800–17–8D	19 – 1
67F–43802–00	19 – 37
6H1–43804–10	19 – 4
6H1–43805–10	19 – 3
6H1–4380F–10	19 – 7
6H1–4380G–10	19 – 15
6H1–4380H–10	19 – 13
6H1–4380J–10	19 – 8
6H1–43810–12	19 – 20
6H1–43812–00	19 – 23
6H1–43813–10	19 – 25
6H1–43814–11	19 – 19
6H1–43816–00	19 – 65
6H1–43817–01	19 – 45
6E5–43818–00	19 – 30
6H1–43820–11	19 – 61
6H1–43821–11	19 – 57
6H1–43822–10	19 – 56
6H1–43828–10	19 – 28
6H1–43829–00	19 – 34
6H1–4382A–10	19 – 50
6H1–43830–11	19 – 47
6H1–43831–10	19 – 46
6H1–43833–10	19 – 31
6H1–43834–00	19 – 32
6H1–43835–10	19 – 27
6H1–43840–12	19 – 17
6H1–43841–11	19 – 40
6H1–43843–11	19 – 69
6H1–43844–10	19 – 42
6H1–43845–00	19 – 53
6H1–43847–00	19 – 48
6H1–4384E–20	19 – 59

NUMERICAL INDEX
INDICE NUMERICO

PART NO. CODIGO Nº	REF. NO.
6H1–4384F–10	19 – 44
6H1–4384G–11	19 – 43
6H1–43854–00	19 – 51
6H1–43855–11	19 – 68
6H1–43856–10	19 – 41
6H1–4385H–00	19 – 74
6D8–43861–00	19 – 24
6H1–43861–00	19 – 21
6H1–43861–10	19 – 18
	19 – 58
6H1–43862–00	19 – 22
6D8–43863–00	19 – 54
6H1–43864–00	19 – 62
6H1–43865–10	19 – 16
6H1–43866–01	19 – 38
6H1–43868–00	19 – 71
6H1–4386K–10	19 – 9
6H1–43874–00	19 – 64
6H1–43875–00	19 – 55
6H1–4387J–00	19 – 73
6H1–43880–02	19 – 2
6H1–43881–10	19 – 12
6H1–4388E–11	19 – 70
6H1–43891–10	19 – 5
6H1–43892–10	19 – 6
6H1–43895–12	19 – 67
6H1–43899–00	19 – 49
697–44113–00	13 – 29
688–44117–00–94	14 – 35
688–44118–01–94	14 – 44
688–44120–13	14 – 51
6H1–44120–13	14 – 51
688–44120–22	32 – 25
688–44120–23	14 – 51
692–44120–33	14 – 51
6H1–44121–00	14 – 42
688–44121–02	14 – 42
688–44122–00	14 – 39
688–44124–00	14 – 38
6H1–44144–00	22 – 68
663–44144–01	21 – 60
696–44147–00	14 – 52
663–44151–00	21 – 59
6H1–44151–00	22 – 67
692–44159–01	13 – 32
663–44173–00	13 – 33
703–44189–20	27 – 36
	28 – 36

PART NO. CODIGO Nº	REF. NO.
703–44189–30	27 – 42
	28 – 42
6K5–44191–00	13 – 30
6X3–44191–00	27 – 47
	28 – 47
688–44194–00	3 – 13
	14 – 22
688–44311–01	21 – 21
	22 – 22
688–44315–A0	21 – 24
	22 – 25
	32 – 9
	32 – 29
688–44316–A0	21 – 31
	22 – 32
	32 – 11
	32 – 32
688–44321–41	21 – 23
	22 – 24
	32 – 38
688–44322–00	21 – 22
	32 – 27
688–44322–41	21 – 22
	22 – 23
	32 – 39
688–44323–00	21 – 32
	32 – 30
688–44323–40	21 – 32
	22 – 33
	32 – 40
688–44324–A0	21 – 33
	22 – 34
	32 – 10
	32 – 31
6D8–44341–01–CA	21 – 27
	22 – 28
688–44352–03	21 – 25
	22 – 26
	32 – 28
688–44361–10	23 – 2
688–44361–20	23 – 2
	32 – 24
692–44361–20	23 – 2
663–44366–00	23 – 14
	32 – 16
663–44367–00	23 – 1
6BL–44391–00	12 – 2
688–44511–00	18 – 33

PART NO. CODIGO Nº	REF. NO.
688–44514–00	18 – 26
6EK–44536–00	15 – 3
	16 – 3
663–44551–02–8D	18 – 9
687–44552–02	18 – 18
663–44553–01–8D	18 – 23
687–44555–00	18 – 11
663–44575–00	18 – 16
	18 – 32
688–45111–04–8D	20 – 1
688–45113–A0	20 – 18
	31 – 18
688–45114–A1	20 – 6
	32 – 2
688–45123–00	20 – 11
	32 – 5
663–45155–10	20 – 2
688–45211–01–8D	20 – 25
	32 – 18
696–45211–01–8D	20 – 20
6H1–45214–00	21 – 12
	22 – 12
6H1–45215–00	21 – 13
	22 – 13
6H1–45251–03	1 – 7
	15 – 2
	16 – 2
692–45300–16–8D	21 – 1
692–45300–25–8D	21 – 1
692–45300–35–8D	21 – 1
692–45300–41–8D	22 – 1
6H1–45301–03–8D	22 – 2
688–45311–06–8D	21 – 2
688–45321–00	21 – 16
	22 – 17
688–45331–00–CA	21 – 49
	22 – 57
688–45341–10	21 – 10
	22 – 10
67F–45371–00	1 – 9
	23 – 12
6E5–45371–10	1 – 10
	23 – 24
688–45375–00	23 – 11
663–45376–00	23 – 10
6J8–45378–00	22 – 16
688–45383–02	21 – 56
	22 – 64

PART NO. CODIGO Nº	REF. NO.
688–45384–02	21 – 57
	22 – 65
688–45501–11	21 – 37
	22 – 38
692–45501–21	21 – 37
688–45501–22	21 – 37
	32 – 23
688–45536–01	21 – 4
	22 – 4
688–45551–01	21 – 38
	22 – 39
688–45560–00	21 – 40
	22 – 41
688–45567–01	21 – 7
	22 – 7
688–45567–10	21 – 7
	22 – 7
688–45567–20	21 – 7
	22 – 7
688–45567–30	21 – 7
	22 – 7
688–45567–40	21 – 7
	22 – 7
688–45567–50	21 – 7
	22 – 7
688–45567–60	21 – 7
	22 – 7
6H1–45571–00	22 – 56
688–45571–01	21 – 48
688–45576–00	21 – 52
	22 – 60
688–45577–01	21 – 51
	22 – 59
688–45577–10	21 – 51
	22 – 59
688–45577–20	21 – 51
	22 – 59
688–45577–30	21 – 51
	22 – 59
688–45577–40	21 – 51
	22 – 59
688–45577–50	21 – 51
	22 – 59
688–45577–60	21 – 51
	22 – 59
688–45587–01	21 – 5
	22 – 5
688–45587–10	21 – 5

PART NO. CODIGO Nº	REF. NO.
688–45587–10	22 – 5
688–45587–20	21 – 5
	22 – 5
688–45587–30	21 – 5
	22 – 5
688–45587–40	21 – 5
	22 – 5
688–45587–50	21 – 5
	22 – 5
688–45587–60	21 – 5
	22 – 5
688–45611–00	21 – 41
6H1–45611–01	22 – 42
688–45631–01	21 – 44
6H1–45631–01	22 – 52
688–45633–00	21 – 46
	22 – 54
688–45634–00	21 – 43
6H1–45634–02	22 – 47
688–45635–00	21 – 47
6H1–45635–00	22 – 55
6H1–45641–01	22 – 44
6H1–45668–00	22 – 49
688–45930–02	23 – 22
688–45932–60	23 – 22
6E5–45941–00	23 – 22
6E5–45943–00	23 – 22
6E5–45945–01	23 – 22
6E5–45947–00	23 – 22
6E5–45949–00	23 – 22
6E5–45952–00	23 – 22
6E5–45954–00	23 – 22
688–45970–03	23 – 22
6E5–45970–10	23 – 23
688–45972–02	23 – 22
6E5–45972–10	23 – 23
688–45974–02	23 – 22
6E5–45974–10	23 – 23
688–45976–01	23 – 22
6E5–45976–10	23 – 23
6E5–45978–10	23 – 23
688–45978–60	23 – 22
688–45987–01	23 – 17
6E5–45994–10	23 – 25
67F–45997–00	23 – 18
703–48128–10	27 – 39
	28 – 39
703–48129–00	27 – 41

PART NO. CODIGO Nº	REF. NO.
703–48129–00	28 – 41
703–48152–10	27 – 6
	28 – 6
703–48153–00	27 – 61
	28 – 60
703–48189–00	27 – 19
	28 – 19
703–48198–00	27 – 16
	28 – 16
703–48203–21	26 – 2
	28 – 1
703–48205–21	26 – 1
	27 – 1
703–48211–10	27 – 25
	28 – 25
703–48212–10	27 – 26
	28 – 26
703–48213–10	27 – 27
	28 – 27
703–48215–10	27 – 46
	28 – 46
703–48219–10	27 – 34
	28 – 34
703–48221–10	27 – 28
	28 – 28
703–48222–20	27 – 31
703–48222–30	28 – 31
703–48223–10	27 – 32
	28 – 32
703–48225–10	27 – 33
	28 – 33
703–48227–00	27 – 30
	28 – 30
703–48232–00	27 – 2
	28 – 2
703–48234–00	27 – 20
	28 – 20
703–48235–00	27 – 5
	28 – 5
703–48236–00	27 – 18
	28 – 18
703–48238–00	27 – 24
	28 – 24
703–48243–00	27 – 17
	28 – 17
703–48244–00	27 – 23
	28 – 23
703–48245–00	27 – 13

NUMERICAL INDEX
INDICE NUMERICO

PART NO. CODIGO Nº	REF. NO.
703–48245–00	28 – 13
703–48246–00	27 – 29
	28 – 29
701–48248–00	27 – 15
	28 – 15
703–48252–00	27 – 14
	28 – 14
703–48261–01	27 – 4
	28 – 4
703–48264–00	27 – 8
	28 – 8
703–48265–10	27 – 11
	28 – 11
703–48268–00	27 – 7
	28 – 7
703–48271–00	27 – 3
	28 – 3
703–48281–00	27 – 35
	28 – 35
703–48284–00	27 – 58
	28 – 57
701–48287–00	27 – 45
	28 – 45
703–48293–10	27 – 44
	28 – 44
701–48320–30	26 – 3
701–48320–70	26 – 3
701–48320–80	26 – 3
700–48339–00	13 – 45
663–48344–00	14 – 6
703–48345–01	27 – 21
	28 – 21
703–48358–00	27 – 22
	28 – 22
688–48511–12	18 – 35
663–48531–00	14 – 1
663–48538–00	14 – 2
688–61350–10	25 – 1
688–61351–10	25 – 2
6E5–61355–00	25 – 8
688–81332–01	8 – 13
688–81800–12	11 – 1
676–81809–10	11 – 3
688–81810–11	11 – 5
663–81811–11	11 – 6
663–81812–11	11 – 8
663–81813–10	11 – 9
663–81820–12	11 – 10

PART NO. CODIGO Nº	REF. NO.
688–81824–10	11 – 15
663–81826–10	11 – 14
688–81830–11	11 – 12
688–81831–00	11 – 13
663–81832–11	11 – 11
663–81840–11	11 – 7
688–81842–00	11 – 16
676–81850–11	11 – 2
676–81857–10	11 – 4
6H1–81916–00	9 – 21
6G1–81941–10	9 – 10
6E9–81945–70	9 – 12
6H0–81949–01	9 – 37
6H0–81949–10	9 – 36
61A–81950–00	9 – 32
6G1–81952–00	9 – 11
6H0–81960–00	9 – 6
6EE–81994–40	5 – 30
6EE–81995–40	5 – 31
6AG–81996–00	5 – 32
6H0–82105–03	9 – 28
6H0–82117–00	9 – 29
6Y5–82117–00	29 – 15
703–82119–00	12 – 21
	18 – 42
682–82119–01	9 – 35
	9 – 38
688–82127–02	18 – 25
6E5–82148–00	15 – 11
	16 – 9
6H1–82148–00	15 – 8
1E6–82151–00	29 – 14
663–82151–00	9 – 27
6G5–82152–00	9 – 14
663–82370–01	9 – 23
6G1–82370–21	9 – 23
6H3–82510–21	10 – 1
703–82510–34	28 – 48
703–82510–44	27 – 48
697–82519–00	9 – 30
697–8252E–02–8D	10 – 10
697–8252F–02–8D	10 – 11
703–82531–00	27 – 51
	28 – 51
6K1–82532–00	27 – 50
	28 – 50
703–82532–00	10 – 3
703–82540–00	27 – 55

PART NO. CODIGO Nº	REF. NO.
703–82540–00	28 – 55
688–82540–12	10 – 7
688–82540–12	29 – 16
663–82554–01	10 – 8
663–82555–01	10 – 9
682–82556–00	10 – 5
	27 – 53
	28 – 53
688–82560–10	9 – 24
703–82563–30	27 – 57
688–82575–02	27 – 52
	28 – 52
688–82575–12	10 – 4
703–82577–00	27 – 49
	28 – 49
676–82577–01	10 – 2
688–82586–21	28 – 54
688–82588–01	9 – 25
688–8258A–20	27 – 54
688–82590–04	9 – 26
688–82590–17	9 – 26
688–82590–30	9 – 26
703–82591–00	27 – 59
	28 – 58
703–82592–00	27 – 60
	28 – 59
688–82594–00	9 – 31
703–83383–11	27 – 56
	28 – 56
6Y5–83514–00	29 – 5
6Y5–83517–00	29 – 2
6Y5–83518–00	29 – 9
6Y5–83523–00	29 – 4
6Y5–83536–00	29 – 10
6Y5–83536–40	29 – 3
6Y7–83540–20	29 – 1
6Y5–83544–00	29 – 11
6Y5–83553–00	29 – 13
688–83664–00	29 – 12
6Y7–83670–00	29 – 8
6H1–83672–13	18 – 1
6H4–85411–00	12 – 31
692–85415–00	12 – 30
688–85510–01	8 – 2
663–85518–00	14 – 19
688–85540–00	9 – 1
688–85542–10	9 – 15
688–85550–00	8 – 1

PART NO. CODIGO Nº	REF. NO.
697–85570–00	9 – 3
688–85580–00	8 – 3
688–86110–01	5 – 27
688–W0001–02	31 – 1
688–W0001–22	32 – 1
688–W0004–00	5 – 14
692–W0004–00	5 – 14
688–W0072–00–8D	32 – 17
692–W0078–02	1 – 11
	32 – 26
688–W0078–1A	32 – 37
692–W0084–11–8D	13 – 1
688–W0090–44–1S	3 – 1
692–W0090–45–1S	3 – 1
6H1–W0093–01	31 – 21
656–W2810–02	7 – 38
90101–06M27	13 – 47
90101–10041	18 – 27
90101–12M06	13 – 22
90101–12M65	15 – 40
	16 – 39
90105–10M67	23 – 13
90109–06M39	9 – 19
90109–08022	4 – 23
90109–12261	18 – 15
90116–06122	5 – 7
90116–10063	18 – 36
90116–10M05	20 – 26
	32 – 20
90116–10M06	3 – 21
90116–10M31	20 – 21
90119–06M09	12 – 8
90119–06M12	3 – 8
90119–06M24	14 – 34
90119–06M29	15 – 4
	16 – 4
90119–06M61	12 – 19
90119–06M75	9 – 18
90119–06MA3	3 – 34
90119–06MA5	3 – 42
90119–08020	3 – 49
90119–08102	20 – 16
90119–08M13	21 – 36
	22 – 37
	32 – 34
90119–08M16	21 – 35
	22 – 36
	32 – 35

PART NO. CODIGO Nº	REF. NO.
90119–08M80	20 – 4
90119–08M84	23 – 9
90119–08M85	20 – 24
90119–08M86	20 – 29
	32 – 22
90119–08MA3	3 – 26
90119–08MA8	3 – 29
90119–10005	3 – 9
90151–05M00	21 – 14
	22 – 14
90152–05011	13 – 7
90157–05M19	24 – 4
90157–06013	14 – 21
90157–06014	3 – 12
90157–06M01	12 – 20
90159–06M11	9 – 22
90159–06M19	5 – 28
90159–06M31	8 – 12
90160–04006	23 – 16
90170–09M03	25 – 5
90170–16M01	21 – 39
	22 – 40
90170–20137	8 – 8
90171–16011	23 – 20
90175–06003	13 – 49
90179–06066	18 – 22
90183–02M03	22 – 51
90185–05002	21 – 15
	22 – 15
90185–08057	18 – 40
90185–09M01	25 – 4
90185–10027	13 – 38
	18 – 31
	18 – 37
90185–12058	13 – 28
90185–22M11	15 – 20
	16 – 18
90201–03313	22 – 50
90201–05652	6 – 29
90201–06416	12 – 17
90201–06M31	9 – 20
90201–08M13	14 – 16
90201–08M23	14 – 11
90201–10008	3 – 10
90201–10049	18 – 38
90201–10120	13 – 37
90201–10M02	13 – 8
90201–10M20	25 – 3

PART NO. CODIGO Nº	REF. NO.
90201–10M63	25 – 7
90201–11M22	18 – 30
90201–12062	15 – 41
	16 – 40
90201–12426	15 – 42
	16 – 41
90201–12537	13 – 26
90201–12M16	18 – 12
90201–12M34	13 – 40
90201–13M19	18 – 14
90201–20417	4 – 25
90201–20M21	18 – 28
90201–21M18	8 – 9
90201–22M67	15 – 19
	16 – 17
90201–30M00	18 – 4
90202–03M51	17 – 6
90202–07M07	14 – 40
90202–12060	23 – 3
90202–12092	13 – 25
	14 – 15
90202–20M06	18 – 29
90202–25M04	18 – 13
90206–10M04	14 – 33
90206–12054	13 – 27
90206–13019	12 – 6
90209–06M05	5 – 26
90249–06M19	15 – 27
	16 – 26
90250–07M02	21 – 45
	22 – 53
90254–03003	13 – 13
90266–06009	2 – 10
90269–02M09	13 – 6
90280–04M04	21 – 26
	22 – 27
	32 – 36
90280–05015	8 – 7
90282–04010	21 – 58
	22 – 66
90338–05M03	12 – 20
90340–08002	21 – 9
	22 – 9
90340–14M06	3 – 30
90386–06088	13 – 44
90386–06M12	14 – 43
90386–07M58	14 – 53
90386–08006	14 – 53

NUMERICAL INDEX
INDICE NUMERICO

PART NO. CODIGO Nº	REF. NO.
90386–08032	13 – 10
90386–10009	13 – 36
90386–10M16	15 – 24
	16 – 23
90386–12089	13 – 24
	14 – 12
90386–13M38	12 – 5
90386–18M14	19 – 29
90386–18M21	16 – 36
90386–18M35	15 – 37
	16 – 37
	17 – 14
90386–18M63	15 – 39
	17 – 13
90386–22M13	14 – 14
90386–22M15	15 – 18
	16 – 16
90386–30M60	18 – 8
90386–30M77	18 – 6
90386–30M78	18 – 5
90387–06M03	9 – 17
90387–06M17	14 – 32
90387–06M69	12 – 16
90387–08M16	14 – 13
90387–10M02	15 – 28
	16 – 27
90387–10M42	25 – 6
90387–12M30	13 – 39
90389–25M00	23 – 19
90430–08003	1 – 8
	21 – 11
	22 – 11
	32 – 6
90430–12072	23 – 4
	32 – 15
90430–14115	3 – 31
	31 – 8
90440–14M00	15 – 44
90445–07260	3 – 15
90445–07M00	3 – 18
90445–07M23	3 – 19
90445–07M86	4 – 7
90445–09090	7 – 4
90445–09097	7 – 30
	7 – 32
90445–09220	7 – 36
90445–11M01	30 – 6
90445–11M05	24 – 11

PART NO. CODIGO Nº	REF. NO.
90445–11M06	24 – 9
90464–12M00	8 – 6
90464–16021	12 – 21
90465–11M10	18 – 41
90467–06016	3 – 16
	3 – 20
	4 – 8
90467–08004	3 – 48
	7 – 5
	7 – 31
	7 – 35
90467–10M04	30 – 12
90468–18008	14 – 9
	14 – 41
	14 – 55
90480–09M25	9 – 16
90480–19M06	23 – 15
90480–20M05	3 – 35
90480–24M04	3 – 17
90501–10326	6 – 31
90501–12082	14 – 49
90501–12M48	22 – 43
90501–14M08	18 – 21
90501–16233	21 – 42
90501–16M11	3 – 37
90501–16M12	14 – 24
90501–16M17	13 – 34
90501–16M65	22 – 48
90501–23215	13 – 9
90502–16M02	15 – 35
	16 – 34
90506–14M24	15 – 29
	16 – 28
90508–29M05	14 – 17
91318–04025	19 – 72
91318–08016	19 – 63
91490–25012	13 – 43
91490–30025	23 – 21
91690–30012	14 – 3
	15 – 34
	16 – 33
91690–30020	15 – 26
	16 – 25
	17 – 3
92903–06100	10 – 17
92903–06600	5 – 18
	7 – 13
	8 – 5

PART NO. CODIGO Nº	REF. NO.
92903–06600	10 – 15
	14 – 37
92903–06600	14 – 46
92903–08600	11 – 19
	14 – 47
92990–05100	5 – 16
	7 – 23
	29 – 7
92990–06100	10 – 13
92990–06600	12 – 29
	13 – 42
	13 – 48
92990–08200	14 – 54
92990–08600	11 – 20
	27 – 38
	28 – 38
92990–10100	23 – 8
92990–12200	13 – 23
92995–06100	2 – 8
	5 – 9
	15 – 6
	16 – 6
92995–06600	2 – 9
	2 – 15
	2 – 17
	4 – 10
	7 – 3
	7 – 29
	9 – 5
	9 – 9
	9 – 34
	12 – 14
	12 – 26
	15 – 7
	16 – 7
	21 – 20
	22 – 21
92995–08600	14 – 5
	18 – 20
	20 – 15
92995–10600	15 – 14
	16 – 12
	23 – 7
93101–25M03	21 – 29
	21 – 55
	22 – 30
	22 – 63
	32 – 14

PART NO. CODIGO Nº	REF. NO.
93102–08M43	19 – 14
93102–30M05	4 – 3
	31 – 15
93102–36M02	4 – 13
	31 – 14
93104–20M02	4 – 4
	31 – 16
93106–09014	21 – 18
	22 – 19
	32 – 8
93210–03261	5 – 29
93210–04228	6 – 8
	31 – 23
93210–04230	6 – 19
	31 – 30
93210–064A5	19 – 36
93210–07003	22 – 69
93210–08287	24 – 14
	24 – 16
93210–09165	19 – 35
93210–10M74	19 – 52
93210–11368	19 – 66
93210–12N52	19 – 39
93210–15M52	30 – 11
93210–16275	25 – 10
93210–29M94	18 – 7
93210–32738	1 – 6
	7 – 9
	31 – 19
93210–46044	21 – 30
	22 – 31
	32 – 12
	32 – 33
93210–46M16	4 – 14
	31 – 13
93210–49046	21 – 17
	22 – 18
	32 – 7
93210–62269	4 – 5
	31 – 17
93210–68N50	19 – 26
93210–85M97	21 – 53
	22 – 61
	32 – 13
93306–206U5	4 – 16
93306–207U0	21 – 50
	22 – 58
93310–636U4	4 – 12

PART NO. CODIGO Nº	REF. NO.
93310–730V8	4 – 26
93310–835U8	4 – 15
93315–325V1	21 – 3
	22 – 3
93317–325U0	21 – 54
	22 – 62
93332–000U3	21 – 6
	22 – 6
93332–000W7	21 – 8
	22 – 8
93410–18M05	15 – 38
	16 – 38
93410–28M06	18 – 10
93410–32M00	4 – 17
93430–06024	27 – 12
	28 – 12
93450–07M00	22 – 71
93450–44166	21 – 28
	22 – 29
93501–04M02	14 – 48
93503–16003	22 – 45
93505–32038	19 – 75
93515–32M01	13 – 35
93603–12M11	22 – 46
93603–21111	4 – 24
93604–10M03	21 – 34
	22 – 35
93606–12019	20 – 3
	20 – 19
	20 – 22
	20 – 27
	23 – 5
	32 – 19
93700–06M03	13 – 17
	15 – 16
	16 – 14
94702–00160	1 – 4
	3 – 50
94702–00247	1 – 4
	3 – 50
95303–05700	14 – 20
95303–06600	14 – 23
95303–06700	3 – 14
95313–10600	3 – 11
95380–03600	7 – 19
95380–05600	14 – 26
	14 – 29
	27 – 9

PART NO. CODIGO Nº	REF. NO.
95380–05600	28 – 9
	29 – 6
95380–06600	5 – 10
	27 – 43
	28 – 43
95380–08600	7 – 14
95380–10600	20 – 23
	20 – 28
	32 – 21
95380–12600	15 – 43
	16 – 42
95380–12800	18 – 17
97013–06014	7 – 12
97013–06018	5 – 21
97013–06020	10 – 16
	14 – 36
97013–06030	5 – 17
	8 – 4
	10 – 14
97013–08030	11 – 18
	14 – 45
97075–08025	18 – 19
	20 – 14
97075–10040	23 – 6
97080–06010	17 – 11
97095–06010	15 – 31
	16 – 30
97095–06016	2 – 14
	12 – 13
	15 – 5
	16 – 5
	21 – 19
	22 – 20
97095–06018	2 – 7
97095–06020	4 – 9
	7 – 2
	9 – 4
	9 – 8
	12 – 25
97095–06025	2 – 16
	9 – 33
97095–06030	12 – 18
97095–06040	7 – 28
97095–08016	14 – 4
97095–08045	14 – 10
97095–10045	15 – 13
	16 – 11
97380–05025	27 – 10

PART NO. CODIGO Nº	REF. NO.
97380–05025	28 – 10
97380–08030	27 – 37
	28 – 37
97513–06516	9 – 13
	13 – 31
97575–08530	20 – 13
97575–08535	18 – 34
	20 – 17
97595–06420	19 – 33
97595–06510	8 – 14
	15 – 9
97595–06512	3 – 22
	9 – 7
97595–06530	12 – 27
97602–05210	19 – 60
97607–04310	19 – 11
97880–05020	5 – 15
97880–06012	15 – 12
	16 – 10
97880–06025	10 – 12
97885–05012	13 – 19
97885–05016	19 – 10
97885–06008	13 – 18
97885–06012	10 – 6
97885–06016	5 – 25
	18 – 24
97980–04114	6 – 17
	31 – 29
97980–04210	11 – 17
97980–05114	30 – 2
97980–05310	6 – 25
97980–06340	9 – 2
97985–06216	18 – 2
98503–05028	7 – 22
98580–04006	27 – 40
	28 – 40
98580–04008	6 – 12
98780–04015	3 – 24
99001–08600	21 – 61
	22 – 70
99530–08012	3 – 7