YAMAHA

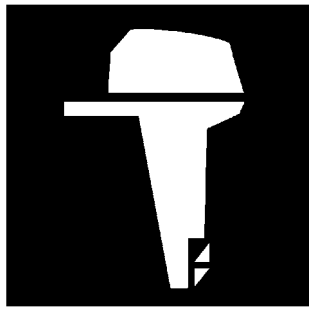

PARTS CATALOGUE
CATALOGO DE REPUESTOS

E9.9DMH'15 (6B3D)
E15DMH'15 (6B4D)

1P6B3-200S1

( )

YAMAHA
GENUINE
Parts & Accessories

E9.9DMH/E15DMH
PARTS CATALOGUE
©2015 by Yamaha Motor Co., Ltd.
1st edition, June 2015
All rights reserved.
Any reprinting or unauthorized use
without the written permission of
Yamaha Motor Co., Ltd.
is expressly prohibited.
Printed in Japan.

E9.9DMH/E15DMH
CATALOGO DE REPUESTOS
©2015 por Yamaha Motor Co., Ltd.
1ª edición, junio 2015
Todos los derechos reservados.
Toda reproducción o uso no autorizado
sin el consentimiento escrito de
Yamaha Motor Co., Ltd.
quedan expresamente prohibidos
Impreso en Japón.

FOREWORD

This Parts Catalogue is related to the parts for the model(s) on the cover page. When you are ordering replacement parts, please refer to this Parts Catalogue and quote both part numbers and part names correctly.

1. Modifications or additions which have been made after the issue of the Parts Catalogue will be announced in the Parts News.
   It is advisable that you make the necessary corrections to the Parts Catalogue according to the Parts News.

2. Abbreviations
   The following abbreviations are used in this Parts Catalogue.

   "UR" Use specified parts number.
   "UN" Use as many as needed.
   "AP" Alternate Parts
   "LM" Locally Made (Parts need to be ordered locally)
   "F#" Frame No. (Applicable machine No.)
   "O/S" Over Size

3. The number of components for assembly
   - Parts, which are to be supplied in an assembly, are listed with a dot (.) in front of the part name as shown below.
   - The numeral appearing to the right of each component part indicates the quantity of parts for each assembly unit.

PART NO.	DESCRIPTION	Q'TY	REMARKS
2F5–83310–60	FRONT FLASHER LIGHT ASSY	2	
115–83311–60	.BULB (6V–18W)	1	

4. Applicable colours of graphics are represented in the "REMARKS" as shown below.

PART NO.	DESCRIPTION	Q'TY	REMARKS
2N4–24110–00–X5	FUEL TANK COMP.	2	MXR
3J1–24240–10	.GRAPHIC, FUEL TANK	1	FOR MXR

5. Note that the illustrations for reference in finding parts numbers are not to be used for assembling. When assembling, please use the applicable service manual.

6. The asterisk (*) before a reference number indicates modified items after the first edition.

7. Applicable Serial No.

   Engine Serial No.

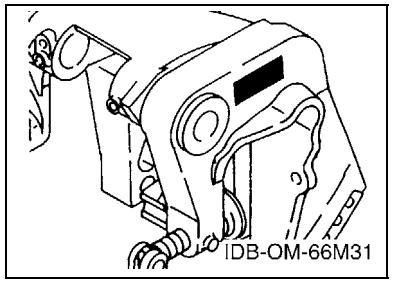

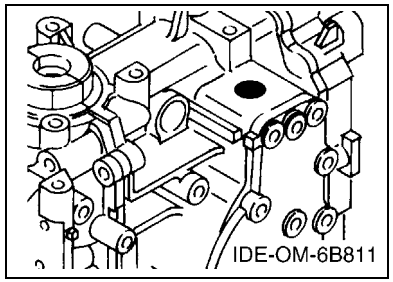

8. Applicable Engine Starting Serial No.

Model	Serial No.	Model	Serial No.
E9.9D	6B3K-1016870	E15D	6B4K-1228720

9. Applicable Colour Code

Abbreviation	Colour Name	Colour Code
DBNM2	DARK BLUISH GRAY METALLIC 2	004D

10. Quantity Column Information

Column No.	Name Of Q'ty Column	Applicable Model
1	6B3D	E9.9DMH
2	6B4D	E15DMH

PROLOGO

Este catálogo de repuestos corresponde a las piezas para el o los modelos que figuran en la página de portada. Al formular el pedido de repuestos, se ruega citar este catálogo y especificar correctamente el número y el nombre de las piezas.

1. Las modificaciones y agregados que se hayan realizado después de la edición de este Catálogo de Repuestos, serán anunciados en las Informaciones de Recambios.
   Es recomendable que se hagan las correcciones necesarias en el Catálogo de Repuestos de acuerdo con las Informaciones de Recambios.

2. Abreviaciones
   En este. Catálogo de Repuestos se emplean las siguientes abreviaciones.

   "UR" Usar el número de partes especificado
   "UN" Usar la cantidad necesaria
   "AP" Piezas sustitutivas
   "LM" Fabricación local (Hay que pedir los repuestos en las cercanías)
   "F#" Nº de bastidor (Nº aplicable a la máquina)
   "O/S" Sobredimensionado

3. La cantidad de componentes para el montaje
   - Los componentes, suministrados como conjunto, se describen con un punto (.) que precede al nombre del parte como se indica a continuación.
   - La numeración que aparece a la derecha de cada descripción indica la cantidad de partes por cada unidad de conjunto.

CODIGO Nº	DESCRIPCION	CANT.	OBSERVACIONES
2F5–83310–60	ENSAMBLAJE DE LA LUZ	2	
115–83311–60	.BOMBILLA (6V–18W)	1	

4. Los colores de los componentes se indican como sigue en la columna de "OBSERVACIONES".

CODIGO Nº	DESCRIPCION	CANT.	OBSERVACIONES
2N4–24110–00–X5	COMP. DEL TANQUE	2	MXR
3J1–24240–10	.GRAFICO, DEL TANQUE	1	PARA MXR

5. Debe tenerse en cuenta que las ilustraciones sirven como guia para la búsqueda de los números de partes y no deben usarse para el montaje. Durante el montaje, se recomienda usar el manual de taller correspondiente.

6. EL asterisco (*) antes del número de referencia indica los elementos modificados después de la primera edición.

7. Números de serie

   Nº de Serie del motor

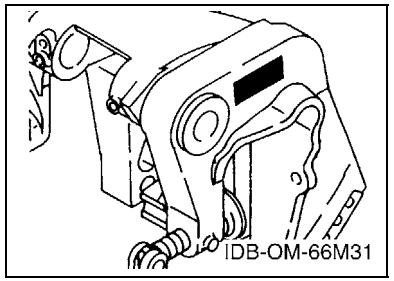

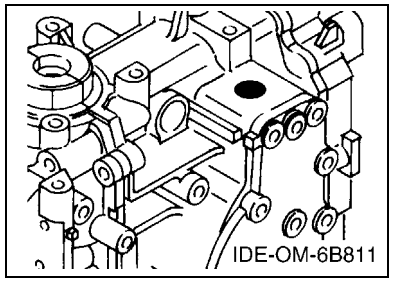

8. Números de serie del motor

Modelo	Nº de serie	Modelo	Nº de serie
E9.9D	6B3K-1016870	E15D	6B4K-1228720

9. Códigos de color aplicables

Abreviatura	Nombre de color	Código de color
DBNM2	DARK BLUISH GRAY METALLIC 2	004D

10. Informacion para la columna de cantidades

Columna Nº	Nombre de la columna de cantidades	Modelo aplicable
1	6B3D	E9.9DMH
2	6B4D	E15DMH

CONTENTS

SCHEDULED SERVICE PARTS 1
TOP COWLING 2
CYLINDER & CRANKCASE 3
CRANKSHAFT & PISTON 5
INTAKE 7
CARBURETOR 8
FUEL 10
STARTER 11
GENERATOR 13
ELECTRICAL 14
BOTTOM COWLING 15
STEERING 16
CONTROL 17
BRACKET 1 19
BRACKET 2 22
UPPER CASING 24
LOWER CASING & DRIVE 1 26
LOWER CASING & DRIVE 2 29
FUEL TANK 31
OPTIONAL PARTS 32
REPAIR KIT 1 33
REPAIR KIT 2 34

INDEX

NUMERICAL INDEX 35

CONTENIDO

PARTES DE REPUESTO TEMPORALES 1
SOPORTE SUPERIOR 2
CYLINDRO & CARTER 3
CIGUENAL & PISTON 5
ADMISION 7
CARBURADOR 8
COMBUSTIBLE 10
ARRANQUE 11
GENERADOR 13
ELECTRICO 14
CUBIERTA INFERIOR 15
DIRECCION 16
CONTROL 17
SOPORTE 1 19
SOPORTE 2 22
FUNDA SUPERIOR 24
IMPULSOR E INFERIOR 1 26
IMPULSOR E INFERIOR 2 29
DEPOSITO DE COMBUSTIBLE 31
PARTES OPCIONALES 32
ESTUCHE REPARATION 1 33
ESTUCHE REPARATION 2 34

INDICE

INDICE NUMERICO 35

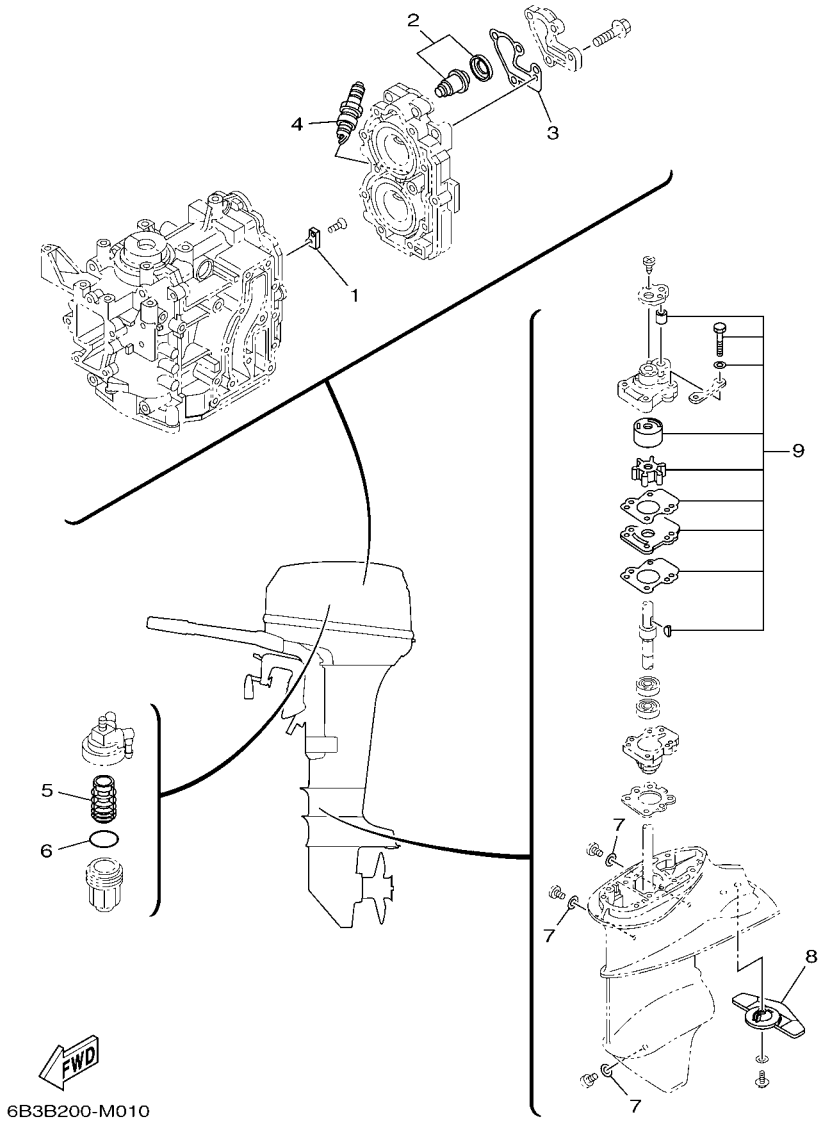

FIG. 1 SCHEDULED SERVICE PARTS PARTES DE REPUESTO TEMPORALES

REF. NO.	PART NO. CODIGO Nº	DESCRIPTION DESCRIPCION	6B3D	6B4D				REMARKS OBSERVACIONES
1	682–11325–00	ANODE ANODO	1	1				
2	6E5–12411–30	THERMOSTAT TERMOSTAT	1	1				
3	682–12414–A1	GASKET, COVER EMPAQUE	1	1				
4	94702–00160	PLUG, SPARK (NGK B8HS-10) BUJIA (NGK B8HS-10)	2	2				UR UR
	94702–00247	PLUG, SPARK (NGK BR8HS-10) BUJIA (NGK BR8HS-10)	2	2				UR FOR CAR UR FOR CAR
5	61N–24563–00	ELEMENT, FILTER ELEMENTO DEL FILTRO	1	1				
6	93210–32738	O-RING ANILLO O	1	1				
7	90430–08020	GASKET JUNTA	3	3				
8	6B4–45251–00	ANODE CATODE	1	1				
9	6B4–W0078–0A	WATER PUMP REPAIR KIT ESTUCHE REPARACION BOMBA AGUA	1	1				

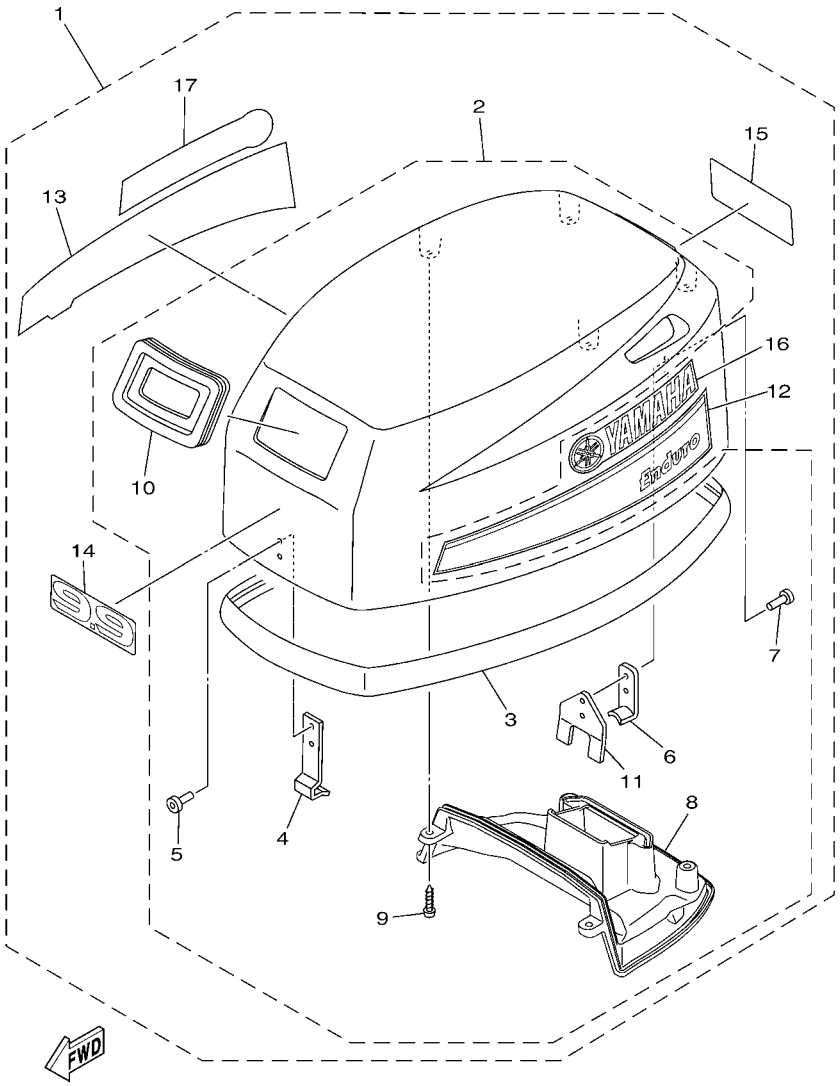

6B3C200-N020

FIG. 2 TOP COWLING SOPORTE SUPERIOR

REF. NO.	PART NO. CODIGO Nº	DESCRIPTION DESCRIPCION	6B3D	6B4D				REMARKS OBSERVACIONES
1	6B3–42610–20	TOP COWLING ASSY SOPORTE SUPERIOR COMPL.	1					
	6B4–42610–40	TOP COWLING ASSY SOPORTE SUPERIOR COMPL.		1				
	6B4–42610–50	TOP COWLING ASSY SOPORTE SUPERIOR COMPL.		1				FOR IDN FOR IDN
2	6B4–4261A–00	.TOP COWLING W/O GRAPHICS .SOPORTE SUPERIOR SIN GRAFICOS	1	1				
	6B4–4261A–10	.TOP COWLING W/O GRAPHICS .SOPORTE SUPERIOR SIN GRAFICOS		1				FOR IDN FOR IDN
3	6B4–42615–00	..SEAL ..SELLO	1	1				
4	6B4–42651–00	..HOOK ..GANCHO	1	1				
5	90266–04M00	..RIVET ..REMACHE	2	2				
6	6B4–42647–00	..HOLDER, CLAMP BAND ..MORDAZA DE ABRAZADERA	1	1				
7	90266–04005	..RIVET ..REMACHE	2	2				
8	6B4–42613–10	..MOLDING, AIR DUCT ..MOLDURA CONDUCTO AIRE	1	1				
9	90167–05017	..SCREW, TAPPING ..TORNILLO DE ROSCA HEMBRA	4	4				
10	6B4–15761–00	..SEAL, RUBBER 1 ..SELLO DE GOMA 1	1	1				
11	6B4–42646–00	..PLATE, CLAMP ..PLACA GRAMPA	1	1				
12	677–42675–10	.GRAPHIC, SIDE 1 .CALCAMONIA LATERAL 1	1	1				
13	677–42676–10	.GRAPHIC, SIDE 2 .CALCAMONIA LATERAL 2	1	1				
14	63V–42678–40	.GRAPHIC, REAR .CALCAMONIA TRASERA	1					
	63W–42678–40	.GRAPHIC, REAR .CALCAMONIA TRASERA		1				
15	63V–42678–40	.GRAPHIC, REAR .CALCAMONIA TRASERA	1					
	63W–42678–40	.GRAPHIC, REAR .CALCAMONIA TRASERA		1				
16	6E0–42681–40	.MARK, COWLING .MARCA DE CUBIERTA	1	1				
17	6E0–42681–40	.MARK, COWLING .MARCA DE CUBIERTA	1	1				

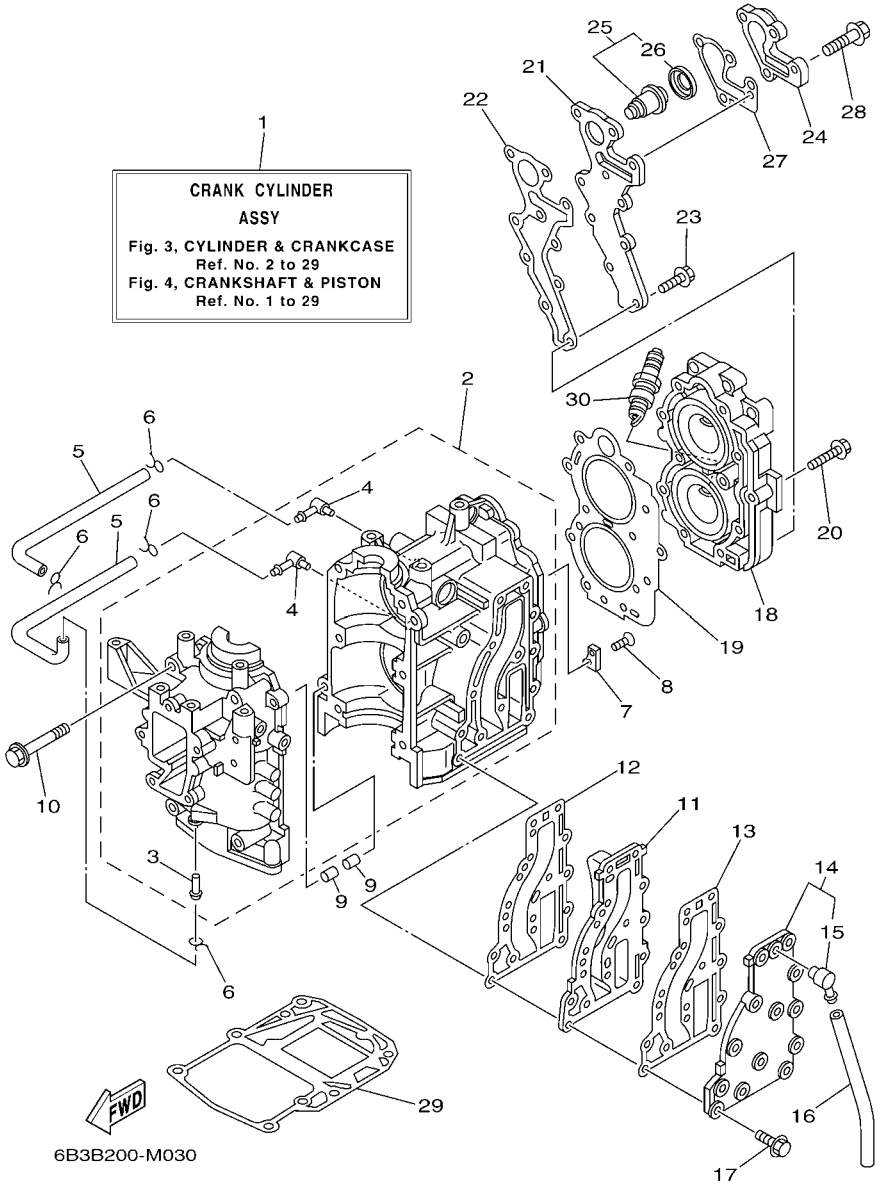

FIG. 3 CYLINDER & CRANKCASE CYLINDRO & CARTER

REF. NO.	PART NO. CODIGO Nº	DESCRIPTION DESCRIPCION	6B3D	6B4D				REMARKS OBSERVACIONES
1	6B4–W0090–00–1S	CRANK CYLINDER ASSY BLOQUE MOTOR COMPLETO	1	1				
2	6B4–15100–00	CRANKCASE ASSY CARTER COMPLETO	1	1				
3	624–14485–00	.PIPE, JOINT .TUBO DE UNION	1	1				
4	650–14485–03	.PIPE, JOINT .TUBO DE UNION	2	2				
5	90445–07M08	HOSE (L220) TUBO (L220)	2	2				
6	90467–06016	CLIP PRESILLA	4	4				
7	682–11325–00	ANODE ANODO	1	1				
8	98780–05015	SCREW, FLAT HEAD TORNILLO CABEZA PLANA	1	1				
9	93606–12019	PIN, DOWEL PASADOR DE CLAVIJA	2	2				
10	90119–08M07	BOLT, WITH WASHER TORNILLO CON ARANDELA	6	6				
11	63V–41111–00–1S	INNER COVER, EXHAUST CUBIERTA INTERIOR DE ESCAPE	1	1				
12	6B4–41112–A0	GASKET, EXHAUST INNER COVER EMPAQUE	1	1				
13	63V–41112–A0	GASKET, EXHAUST INNER COVER EMPAQUE	1	1				
14	63V–41113–00–1S	OUTER COVER, EXHAUST CUBOERTA EXTERIOR DE ESCAPE	1	1				
15	676–11372–00	.NIPPLE, HOSE .NIPLE DE MANGUERA	1	1				
16	90445–09104	HOSE (L300) TUBO (L300)	1	1				
17	90119–06MA4	BOLT, WITH WASHER TORNILLO CON ARANDELA	13	13				
18	6B4–11111–00–1S	HEAD, CYLINDER 1 CULATA CILINDRO 1	1	1				
19	63V–11181–A2	GASKET, CYLINDER HEAD 1 JUNTA, DE CULATA 1	1	1				
20	90105–07M05	BOLT, FLANGE TORNILLO	11	11				
21	6B4–11191–00–1S	COVER, CYLINDER HEAD 1 TAPA CULATA DE CILINDRO 1	1	1				
22	6B4–11193–A1	GASKET, HEAD COVER 1 EMPAQUE	1	1				
23	90119–06023	BOLT, WITH WASHER TORNILLO CON ARANDELA	6	6				
24	682–12413–00–1S	COVER, THERMOSTAT CUBIERTA TERMOSTATO	1	1				
25	6E5–12411–30	THERMOSTAT TERMOSTAT	1	1				
26	688–12412–00	.SEAL, THERMOSTAT .SELLO TERMOSTATO	1	1				
27	682–12414–A1	GASKET, COVER EMPAQUE	1	1				

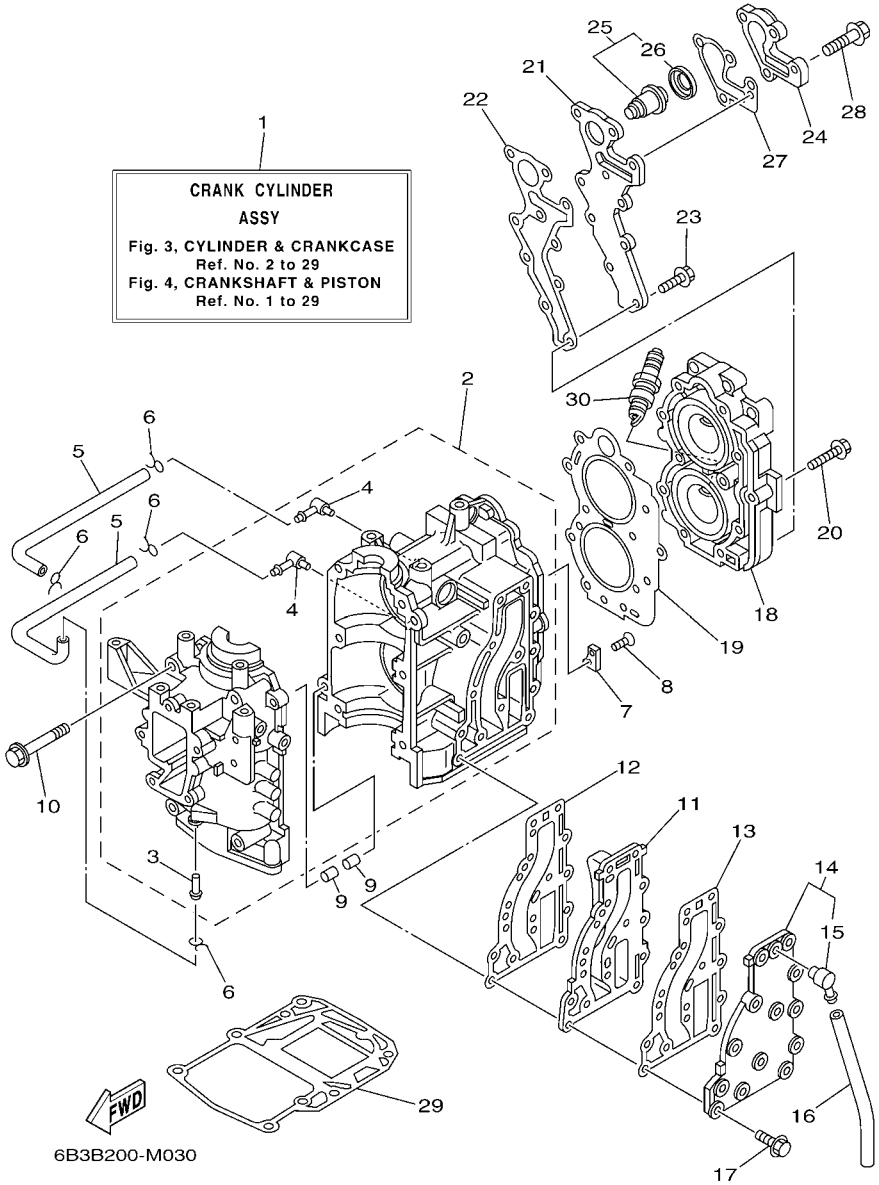

FIG. 3 CYLINDER & CRANKCASE CYLINDRO & CARTER

REF. NO.	PART NO. CODIGO Nº	DESCRIPTION DESCRIPCION	6B3D	6B4D				REMARKS OBSERVACIONES
28	90119–06MA3	BOLT, WITH WASHER TORNILLO CON ARANDELA	4	4				
29	6B4–11351–A1	GASKET, CYLINDER JUNTA, DE CILINDRO	1	1				
30	94702–00160	PLUG, SPARK (NGK B8HS-10) BUJIA (NGK B8HS-10)	2	2				
	94702–00247	PLUG, SPARK (NGK BR8HS-10) BUJIA (NGK BR8HS-10)	2	2				FOR CAR FOR CAR

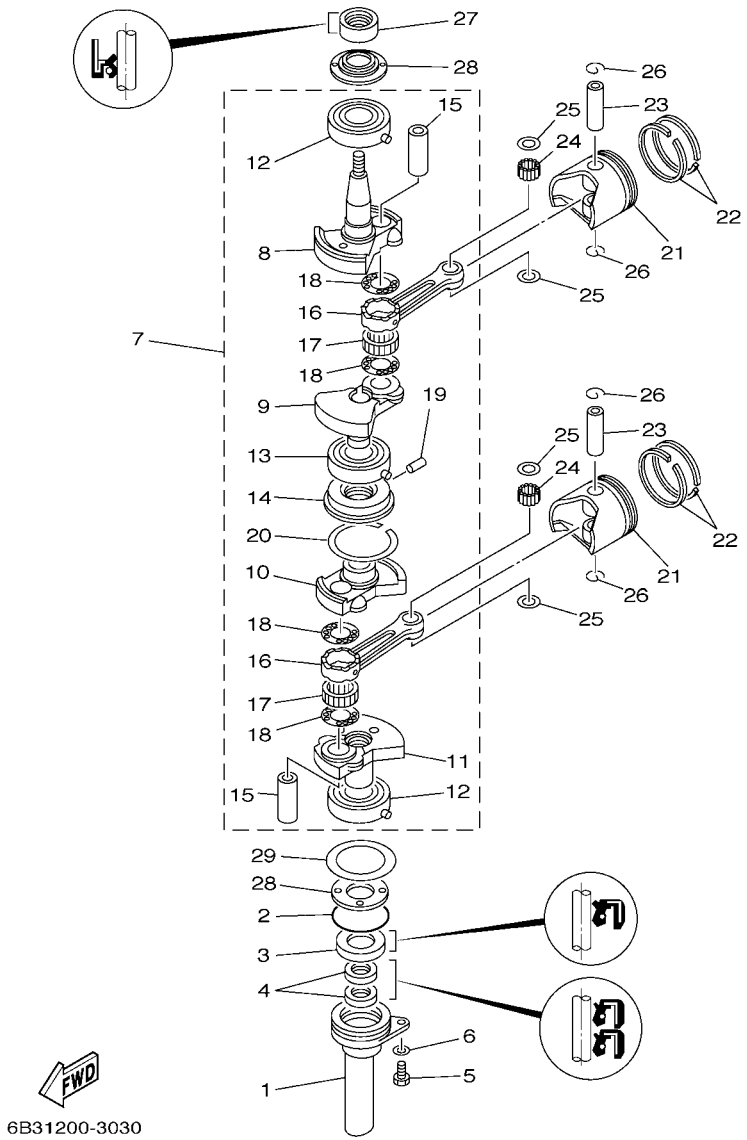

FIG. 4 CRANKSHAFT & PISTON — CIGUENAL & PISTON

REF. NO.	PART NO. CODIGO Nº	DESCRIPTION DESCRIPCION	6B3D	6B4D				REMARKS OBSERVACIONES
1	6B4–15396–00–CA	HOUSING, OIL SEAL CAJA DE SELLO DE ACEITE	1	1				
2	93210–46M16	O-RING ANILLO O	1	1				
3	93102–25010	OIL SEAL SELLO ACEITE	1	1				
4	93101–13M27	OIL SEAL SELLO ACEITE	2	2				
5	97095–06016	BOLT PERNO	1	1				
6	92995–06600	WASHER ARANDELA	1	1				
7	6B4–11400–00	CRANKSHAFT ASSY CIGUENAL COMPLETO	1	1				
8	63V–11412–00	.CRANK 1 .MANIVELA 1	1	1				
9	63V–11422–00	.CRANK 2 .MANIVELA 2	1	1				
10	63V–11432–00	.CRANK 3 .MANIVELA 3	1	1				
11	63V–11442–00	.CRANK 4 .MANIVELA 4	1	1				
12	93306–205A1	.BEARING .COJINETE	2	2				
13	93390–00029	.BEARING .COJINETE DE RODILLOS	1	1				
14	63V–11515–02	.SEAL, LABYRINTH 1 .SELLO LABERINTO 1	1	1				
15	682–11681–00	.PIN, CRANK 1 .PASADOR MANIVELA 1	2	2				
16	6K4–11651–00	.ROD, CONNECTING .BIELA	2	2				
17	93310–620W5	.BEARING .COJINETE DE RODILLOS	2	2				
18	90209–20M23	.WASHER .ARANDELA DE SEPARACION	4	4				
19	91609–20008	.PIN, SPRING .PASADOR DE RESORTE	1	1				
20	93440–52009	.CIRCLIP .SEGURO	1	1				
21	6E7–11631–00–97	PISTON (STD) PISTON (NORMA)	2	2				
	6E7–11635–00	PISTON (0.25MM O/S) PISTON (0.25MM O/S)	2	2				AP AP
	6E7–11636–00	PISTON (0.50MM O/S) PISTON (0.50MM O/S)	2	2				AP AP
22	682–11610–01	PISTON RING SET (STD) JUEGO DE ANILLOS (NORMA)	2	2				
	682–11610–11	PISTON RING SET (0.25MM O/S) JUEGO DE ANILLOS (0.25MM O/S)	2	2				AP AP
	682–11610–21	PISTON RING SET (0.50MM O/S) JUEGO DE ANILLOS (0.50MM O/S)	2	2				AP AP
23	634–11633–00	PIN, PISTON PASADOR, PISTON	2	2				

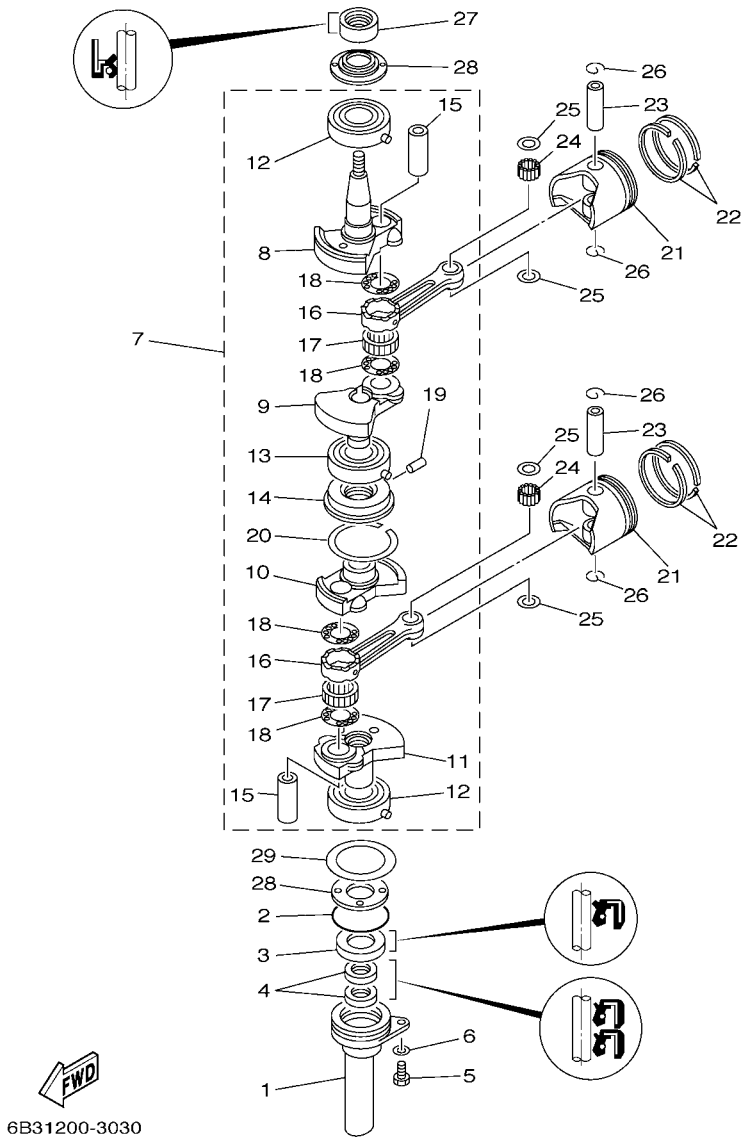

FIG. 4 CRANKSHAFT & PISTON — CIGUENAL & PISTON

REF. NO.	PART NO. CODIGO Nº	DESCRIPTION DESCRIPCION	6B3D	6B4D				REMARKS OBSERVACIONES
24	93602–14104	PIN, DOWEL PASADOR DE CLAVIJA	50	50				
25	90201–14377	WASHER, PLATE ARANDELA PLANA	4	4				
26	93450–15023	CIRCLIP SEGURO	4	4				
27	93110–23M00	OIL SEAL SELLO ACEITE	1	1				
28	63V–11445–00	SPACER ESPACIADOR	2	2				
29	90201–46M29	WASHER, PLATE ARANDELA PLANA	1	1				

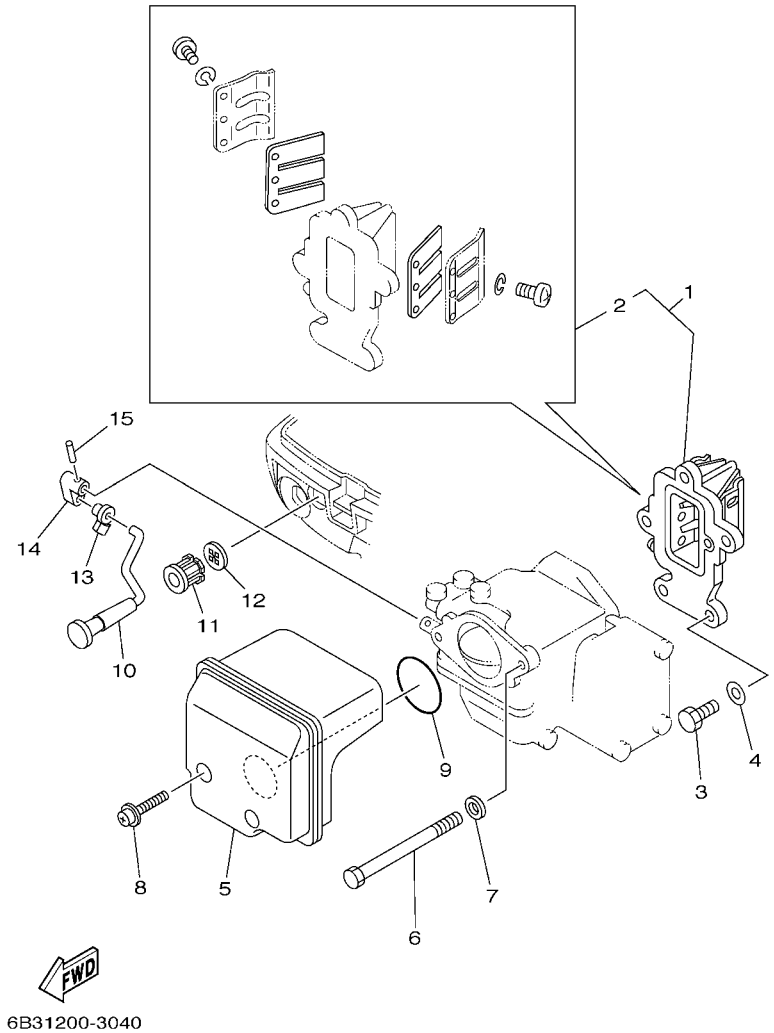

FIG. 5 INTAKE ADMISION

REF. NO.	PART NO. CODIGO Nº	DESCRIPTION DESCRIPCION	6B3D	6B4D				REMARKS OBSERVACIONES
1	63V–13610–10	REED VALVE ASSY VALVULA DE LAMINAS COMPLETA	1					
	63W–13610–00	REED VALVE ASSY VALVULA DE LAMINAS COMPLETA		1				
2	682–W0004–00	.REED SET .JUEGO DE VALVULAS DE LENGUETA	1	1				
3	97095–06020	BOLT PERNO	3	3				
4	92995–06600	WASHER ARANDELA	3	3				
5	6B4–14440–00	SILENCER ASSY, INTAKE SILENCIADOR COMPL DE ADMISION	1	1				
6	97095–06095	BOLT PERNO	2	2				
7	92995–06600	WASHER ARANDELA	2	2				
8	90159–05007	SCREW, WITH WASHER TORNILLO CON VALONA	2	2				
9	93210–35M86	O-RING ANILLO O	1	1				
10	6B4–41271–01	KNOB, CHOKE PERILLA AHOGADOR	1	1				
11	6B4–41273–00	GROMMET TAPON PROTECTOR	1	1				
12	6B4–41274–00	GROMMET 2 TAPON 2	1	1				
13	6B4–41262–00	JOINT, CHOKE LEVER CONECTOR DE AHOGADOR	1	1				
14	6B4–41252–00	LEVER, CHOKE 1 PALANCA AHOGADOR 1	1	1				
15	91690–20010	PIN, SPRING PASADOR DE RESORTE	1	1				

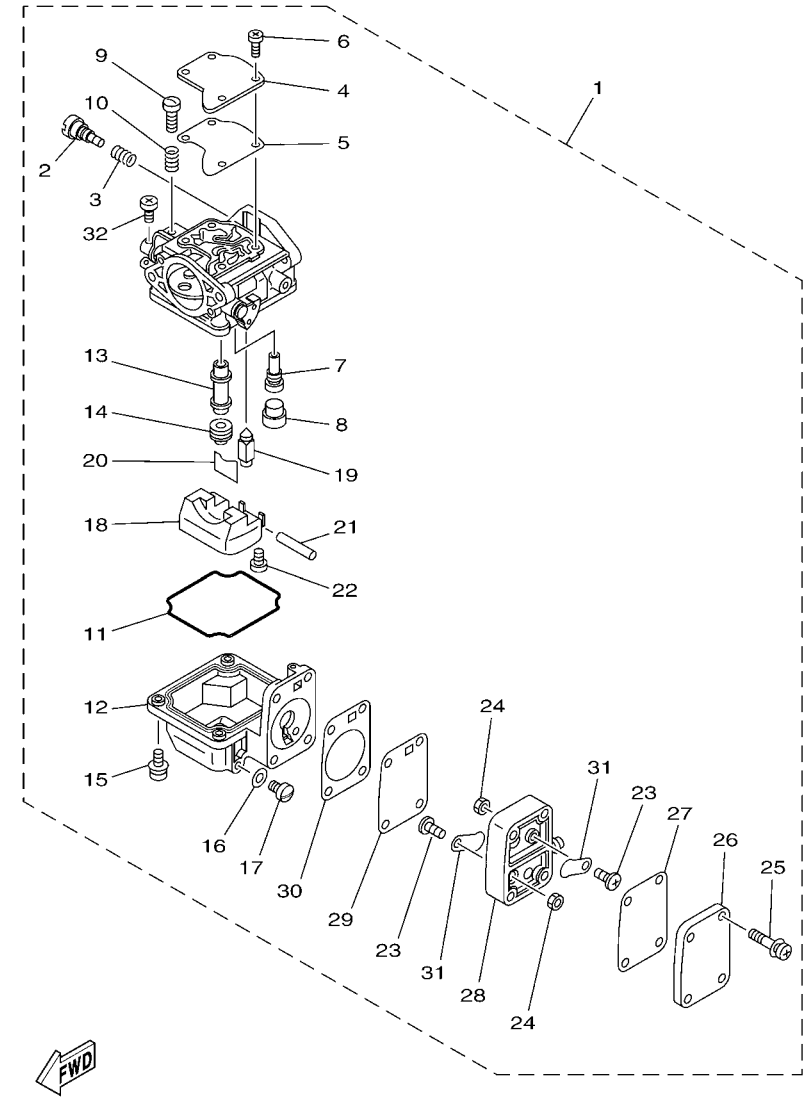

6B3A200-L050

FIG. 6 CARBURETOR CARBURADOR

REF. NO.	PART NO. CODIGO Nº	DESCRIPTION DESCRIPCION	6B3D	6B4D				REMARKS OBSERVACIONES
1	6B3–14301–00	CARBURETOR ASSY 1 CARBURADOR COMPLETO 1	1					
	6B4–14301–00	CARBURETOR ASSY 1 CARBURADOR COMPLETO 1		1				
2	679–14923–00	.SCREW, PILOT .TORNILLO DE AJUSTE	1	1				
3	697–14555–00	.SPRING .RESORTE	1	1				
4	63V–14527–00	.PLATE .PLACA	1	1				
5	63V–14126–00	.GASKET .EMPAQUE	1	1				
6	97803–04010	.SCREW, PAN HEAD .TORNILLO CABEZA ABULTADA	4	4				
7	63V–14948–06	.JET (#48) .INYECTOR (#48)	1	1				
8	679–14966–00	.RUBBER CAP .TAPA	1	1				
9	63V–14523–00	.SCREW, STOP .TORNILLO DE TOPE	1	1				
10	90501–10326	.SPRING, COMPRESSION .RESORTE DE COMPRESION	1	1				
11	63V–14984–00	.GASKET, FLOAT CHAMBER .EMPAQUE CAMARA DE BOIA	1	1				
12	63V–14980–00	.BODY, FLOAT CHAMBER .CUERPO CAMARA DE BOIA	1	1				
13	6B3–14947–00	.JET, NEEDLE .INYECTOR DE AGUJA	1					
	63V–14947–00	.JET, NEEDLE .INYECTOR DE AGUJA		1				
14	676–14943–29	.JET, MAIN (#110) .INYECTOR PRINCIPAL (#110)	1					
	676–14943–79	.JET, MAIN (#108) .INYECTOR PRINCIPAL (#108)		1				
15	97980–04114	.SCREW, WITH WASHER .TORNILLO, CON ARANDELA	4	4				
16	65W–14398–00	.GASKET .EMPAQUE	1	1				
17	65W–14992–00	.SCREW, DRAIN .TORNILLO DE DRENAJE	1	1				
18	63V–14985–00	.FLOAT .BOIA	1	1				
19	6AH–14546–00	.VALVE, NEEDLE .VALVULA DE AGUJA	1	1				
20	663–14159–00	.CLIP .PRESILLA	1	1				
21	6H4–14548–00	.PIN, FLOAT ARM .PASADOR DE BRAZO DE BOIA	1	1				
22	98580–04008	.SCREW, PAN HEAD .TORNILLO DE CABEZA CRUZADA	1	1				
23	98980–03006	.SCREW, BIND .TORNILLO DE LIGAR	2	2				
24	95380–03600	.NUT .TUERCA	2	2				

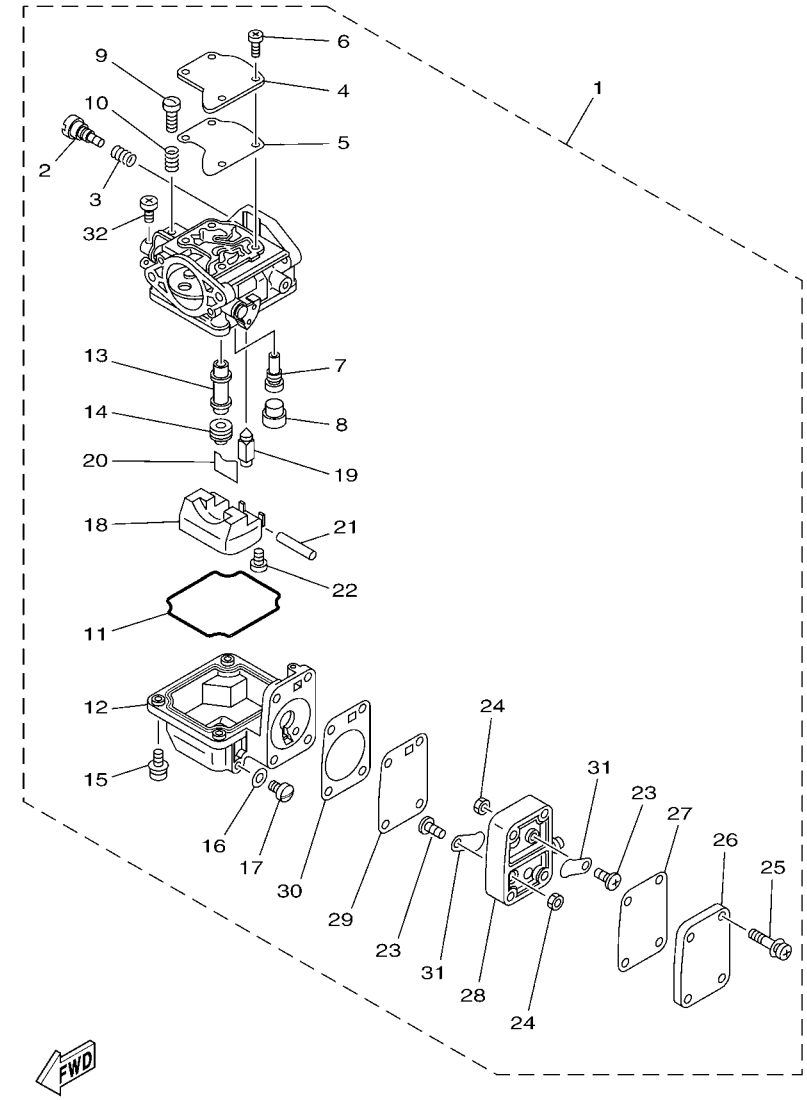

6B3A200-L050

FIG. 6 CARBURETOR CARBURADOR

REF. NO.	PART NO. CODIGO Nº	DESCRIPTION DESCRIPCION	6B3D	6B4D				REMARKS OBSERVACIONES
25	97980–04123	.SCREW, WITH WASHER .TORNILLO, CON ARANDELA	4	4				
26	6G1–24452–00	.COVER .CUBIERTA	1	1				
27	63V–24411–00	.DIAPHRAGM .DIAFRAGMA	1	1				
28	6G1–24412–01	.BODY 1 .CUERPO 1	1	1				
29	6G1–24411–00	.DIAPHRAGM .DIAFRAGMA	1	1				
30	6G1–24431–01	.GASKET, FUEL PUMP 1 .EMPAQUE BOMBA COMBUST 1	1	1				
31	6L5–24421–00	.VALVE, CHECK .VALVULA DE RETENCION	2	2				
32	98580–04006	.SCREW, PAN HEAD .TORNILLO DE CABEZA CRUZADA	1	1				

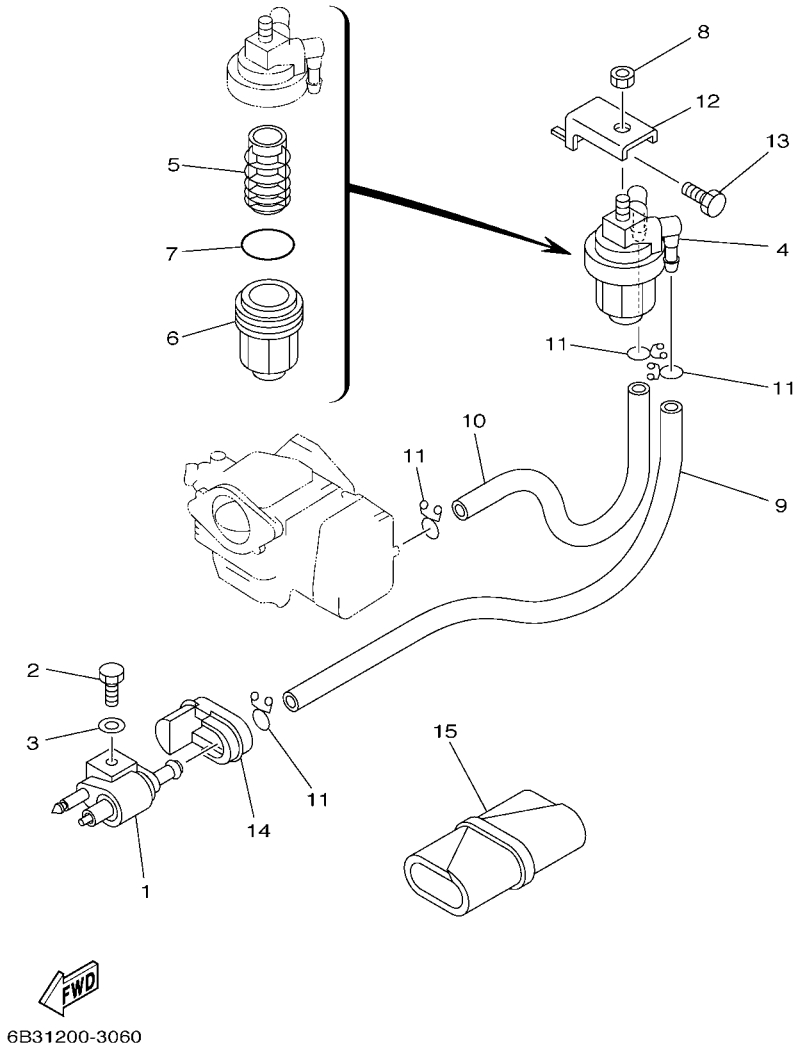

FIG. 7 FUEL COMBUSTIBLE

REF. NO.	PART NO. CODIGO Nº	DESCRIPTION DESCRIPCION	6B3D	6B4D				REMARKS OBSERVACIONES
1	6G1–24304–02	FUEL PIPE JOINT COMP. 1 CONECTOR MANGUERA COMBUST.1	1	1				
2	97095–06020	BOLT PERNO	1	1				
3	92995–06600	WASHER ARANDELA	1	1				
4	61N–24560–00	FILTER ASSY FILTRO COMPLETO	1	1				
5	61N–24563–00	.ELEMENT, FILTER .ELEMENTO DEL FILTRO	1	1				
6	61N–24521–00	.CUP, FILTER .COPA DE FILTRO	1	1				
7	93210–32738	.O-RING .ANILLO O	1	1				
8	95380–08600	NUT TUERCA	1	1				
9	90445–09104	HOSE (L300) TUBO (L300)	1	1				
10	90445–09M00	HOSE (L180) TUBO (L180)	1	1				
11	90467–08004	CLIP PRESILLA	4	4				
12	648–24566–02	BRACKET, FILTER SOPORTE DEL FILTRO	1	1				
13	97013–06010	BOLT PERNO	1	1				
14	6B4–24329–00	SEAL SELLO	1	1				
15	656–W2810–02	TOOL KIT JUEGO DE HERRAMIENTAS	1	1				

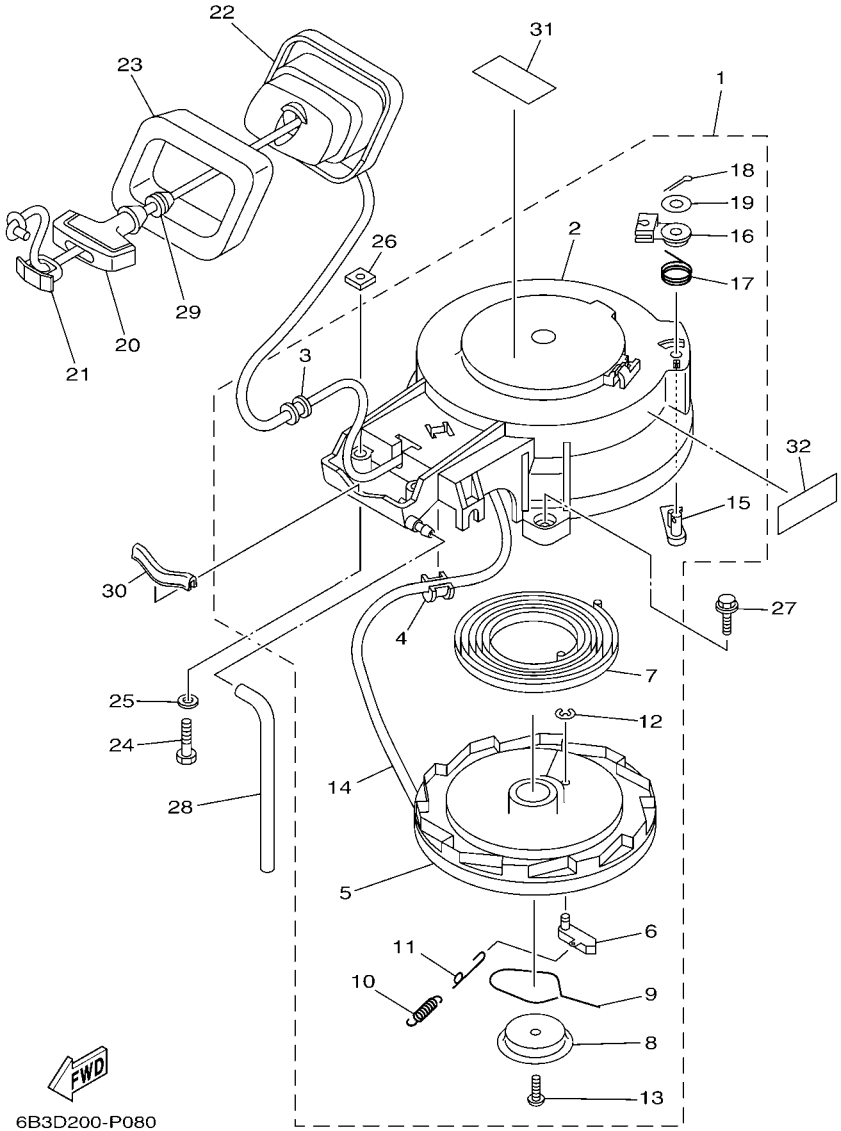

*1:CUT FROM 50M ROLLS,PART NO.90890-44373,CUTTING LENGTH 1.8M

*1:CORTE DE UN RODILLO DE 50M , PARTS NUMERO 90890-44373, LARGO DEL CORTE 1.8M

FIG. 8 STARTER ARRANQUE

REF. NO.	PART NO. CODIGO Nº	DESCRIPTION DESCRIPCION	6B3D	6B4D				REMARKS OBSERVACIONES
1	6B4–15710–10	STARTER ASSY ARRANQUE COMPLETO	1	1				
2	6B4–15711–10	.CASE, STARTER .CAJA DE ARRANQUE	1	1				
3	63V–15764–00	.COLLAR 1 .COLLAR 1	1	1				
4	68T–15764–00	.COLLAR 1 .COLLAR 1	1	1				
5	63V–15714–00	.DRUM, SHEAVE .TAMBOR ROLDANA	1	1				
6	63V–15741–00	.PAWL, DRIVE .TRINQUETE DE TRACCION	1	1				
7	63V–15713–00	.SPRING, STARTER .RESORTE DE ARRANQUE	1	1				
8	63V–15716–10	.PLATE, DRIVE .PLACA DE TRACCION	1	1				
9	63V–15705–10	.SPRING, DRIVE PAWL .RESORTE	1	1				
10	63V–15767–01	.SPRING .RESORTE	1	1				
11	68T–15784–00	.SPRING, RETURN .RESORTE DE RETORNO	1	1				
12	63V–15744–00	.CIRCLIP .SEGURO	1	1				
13	68T–15793–00	.SCREW .TORNILLO	1	1				
14	*	.WIRE, STARTER (L:1800MM) .CUERDA DE ARRANQUE (L:1800MM)	1	1				*1 *1
15	63V–15794–00	.STOPPER .TOPE	1	1				
16	63V–15748–00	.PLUNGER, STARTER STOP .EMBOLO SEGURO DE ARRANQUE	1	1				
17	63V–15734–00	.SPRING, RETURN .RESORTE DE RETORNO	1	1				
18	91490–16018	.PIN. COTTER .CHAVETA	1	1				
19	63V–15726–00	.WASHER, FLAT .ARANDELA PLANA	1	1				
20	6G1–15755–00	HANDLE, STARTER MANIJA DE ARRANQUE	1	1				
21	6G1–15779–00	COVER CUBIERTA	1	1				
22	6B4–15758–A0	GUIDE, ROPE GUIA DE CUERDA	1	1				
23	6B4–15762–00	SEAL, RUBBER 2 SELLO DE GOMA 2	1	1				
24	97095–06035	BOLT PERNO	2	2				
25	92995–06600	WASHER ARANDELA	2	2				
26	90173–06009	NUT, SQUARE TUERCA CUADRADA	2	2				
27	90119–06M82	BOLT, WITH WASHER TORNILLO CON ARANDELA	3	3				

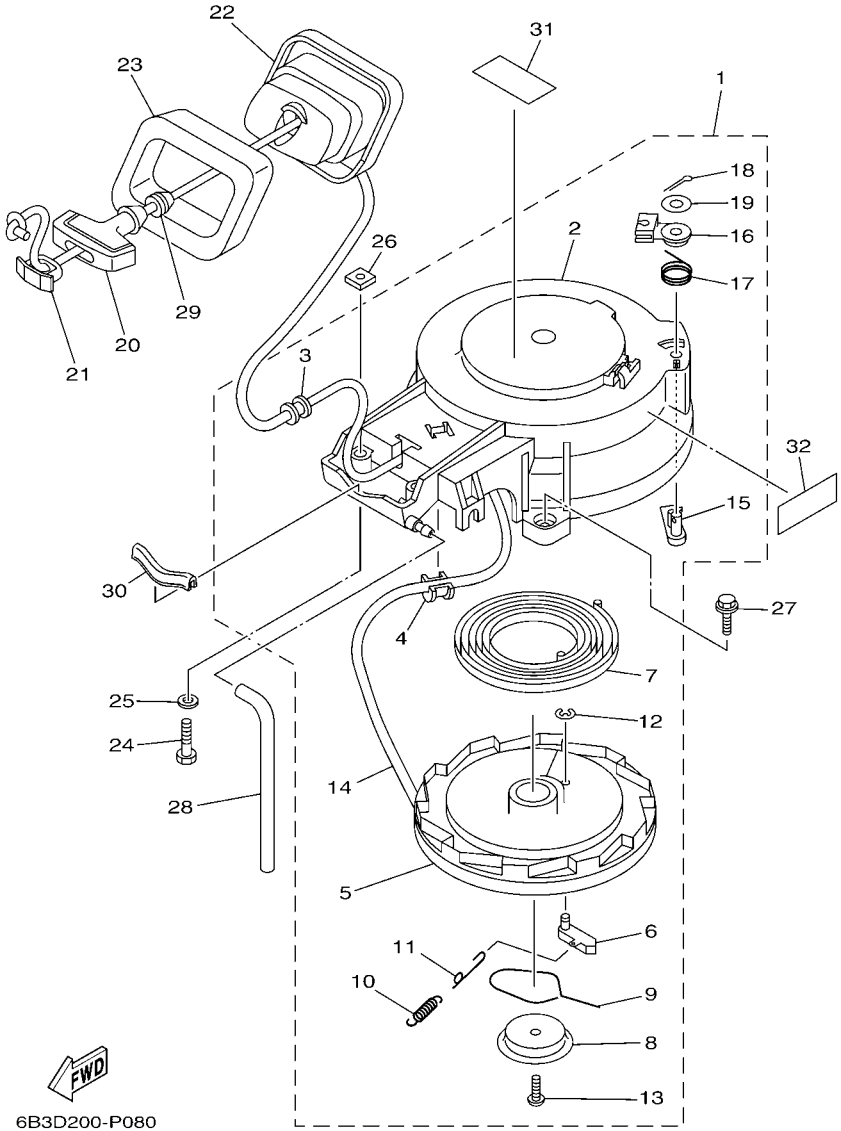

*1:CUT FROM 50M ROLLS,PART NO.90890-44373,CUTTING LENGTH 1.8M

*1:CORTE DE UN RODILLO DE 50M , PARTS NUMERO 90890-44373, LARGO DEL CORTE 1.8M

FIG. 8 STARTER ARRANQUE

REF. NO.	PART NO. CODIGO Nº	DESCRIPTION DESCRIPCION	6B3D	6B4D				REMARKS OBSERVACIONES
28	6J8–24311–00	PIPE, FUEL 1 TUBO DE COMBUSTIBLE 1	1	1				
29	6A0–15789–00	DAMPER AMORTIGUADOR	1	1				
30	6B4–15663–00	SEAL SELLO	1	1				
31	6EE–81995–40	LABEL, WARNING ETIQUETA DE PRECAUCION	1	1				
32	6EE–81994–40	LABEL, SAFETY ETIQUETA DE SEGURIDAD	1	1				

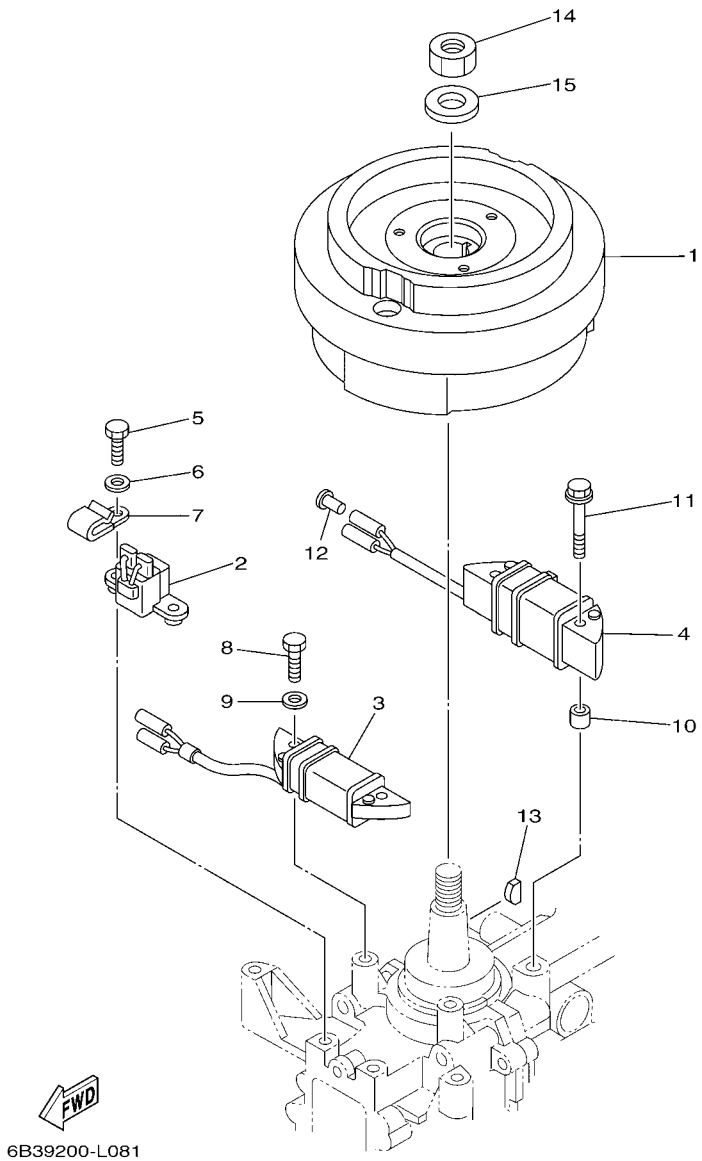

FIG. 9 GENERATOR GENERADOR

REF. NO.	PART NO. CODIGO Nº	DESCRIPTION DESCRIPCION	6B3D	6B4D				REMARKS OBSERVACIONES
1	6B4–85550–01	ROTOR ASSY ROTOR COMPLETO	1	1				UR FOR STD UR FOR STD
	6B4–85550–10	ROTOR ASSY ROTOR COMPLETO	1	1				UR FOR L/COIL UR FOR L/COIL
2	6B4–85580–00	COIL, PULSER BOBINA DE PULSACION	1	1				
3	6B4–85520–00	COIL, CHARGE BOBINA DE CARGA	1	1				
4	63V–85533–00	COIL, LIGHTING BOBINA DE LUZ	1	1				FOR AFR,MEX FOR AFR,MEX
5	97095–06016	BOLT PERNO	2	2				
6	92995–06600	WASHER ARANDELA	2	2				
7	90465–06M90	CLAMP BRIDA	1	1				
8	97095–06020	BOLT PERNO	2	2				
9	92995–06600	WASHER ARANDELA	2	2				
10	90387–06M24	COLLAR ESPACIADOR	2	2				FOR AFR,MEX FOR AFR,MEX
11	90119–06M40	BOLT, WITH WASHER TORNILLO CON ARANDELA	2	2				FOR AFR,MEX FOR AFR,MEX
12	703–82119–00	COVER, LEAD WIRE CUBIERTA DE CABLE CONDUCTOR	2	2				FOR AFR,MEX FOR AFR,MEX
13	90280–05013	KEY, WOODRUFF CUNA WOODRUFF	1	1				
14	90170–12066	NUT TUERCA	1	1				
15	90201–12472	WASHER, PLATE ARANDELA PLANA	1	1				

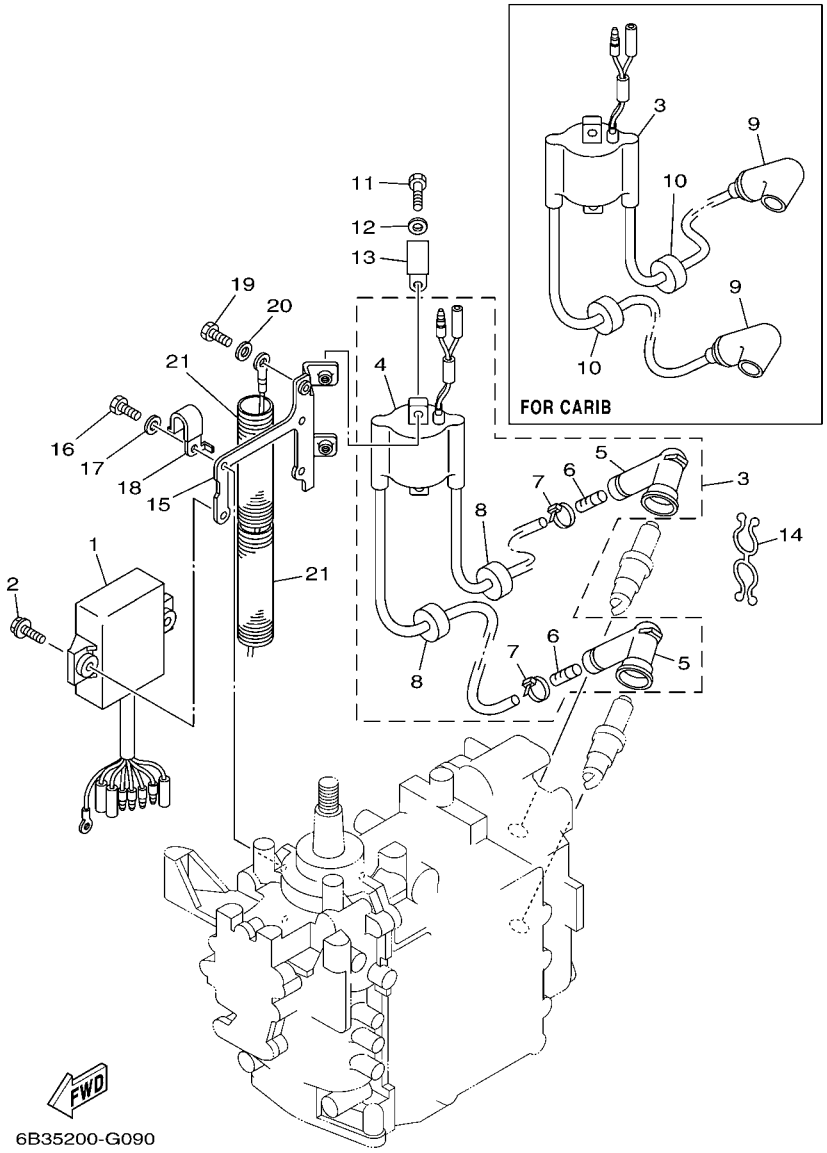

FIG. 10 ELECTRICAL ELECTRICO

REF. NO.	PART NO. CODIGO Nº	DESCRIPTION DESCRIPCION	6B3D	6B4D				REMARKS OBSERVACIONES
1	6B4–85540–03	C.D.I. UNIT ASSY UNIDAD C.D.I. COMPLETA	1	1				
2	90119–06M83	BOLT, WITH WASHER TORNILLO CON ARANDELA	2	2				
3	6B4–85530–00	IGNITION COIL ASSY BOBINA DE IGNICION COMPLETO	1	1				
	6B4–85570–00	IGNITION COIL ASSY BOBINA DE IGNICION COMPLETO	1	1				FOR CAR FOR CAR
4	6B4–85570–00	.IGNITION COIL ASSY .BOBINA DE IGNICION COMPLETO	1	1				FOR 6B4-85530-00 FOR 6B4-85530-00
5	62E–82371–11	.CAP, PLUG .TAPON DE BUJIA COMPLT	2	2				FOR 6B4-85530-00 FOR 6B4-85530-00
6	62E–8231X–00	.TERMINAL 1 .TERMINAL 1	2	2				FOR 6B4-85530-00 FOR 6B4-85530-00
7	90465–11M10	.CLAMP .BRIDA	2	2				FOR 6B4-85530-00 FOR 6B4-85530-00
8	90480–25161	.GROMMET .TAPON	2	2				FOR 6B4-85530-00 FOR 6B4-85530-00
9	6E3–82370–21	PLUG CAP ASSY TAPON DE BUJIA COMPLT	2	2				FOR CAR FOR CAR
10	90480–25161	GROMMET TAPON	2	2				FOR CAR FOR CAR
11	97095–06016	BOLT PERNO	2	2				
12	92995–06600	WASHER ARANDELA	2	2				
13	90465–06M90	CLAMP BRIDA	1	1				
14	90464–08M02	CLAMP BRIDA	1	1				
15	6B4–82316–00	BRACKET, IGNITION COIL SOPORTE BOBINA ENCENDIDO	1	1				
16	97095–06014	BOLT PERNO	2	2				
17	92995–06600	WASHER ARANDELA	2	2				
18	90465–08M99	CLAMP BRIDA	1	1				
19	97095–06010	BOLT PERNO	1	1				
20	92995–06600	WASHER ARANDELA	1	1				
21	6N7–83557–00	TUBE (I.DIA:22MM) ENCHUFE DE ACEITE (I.DIA:22MM)	2	2				

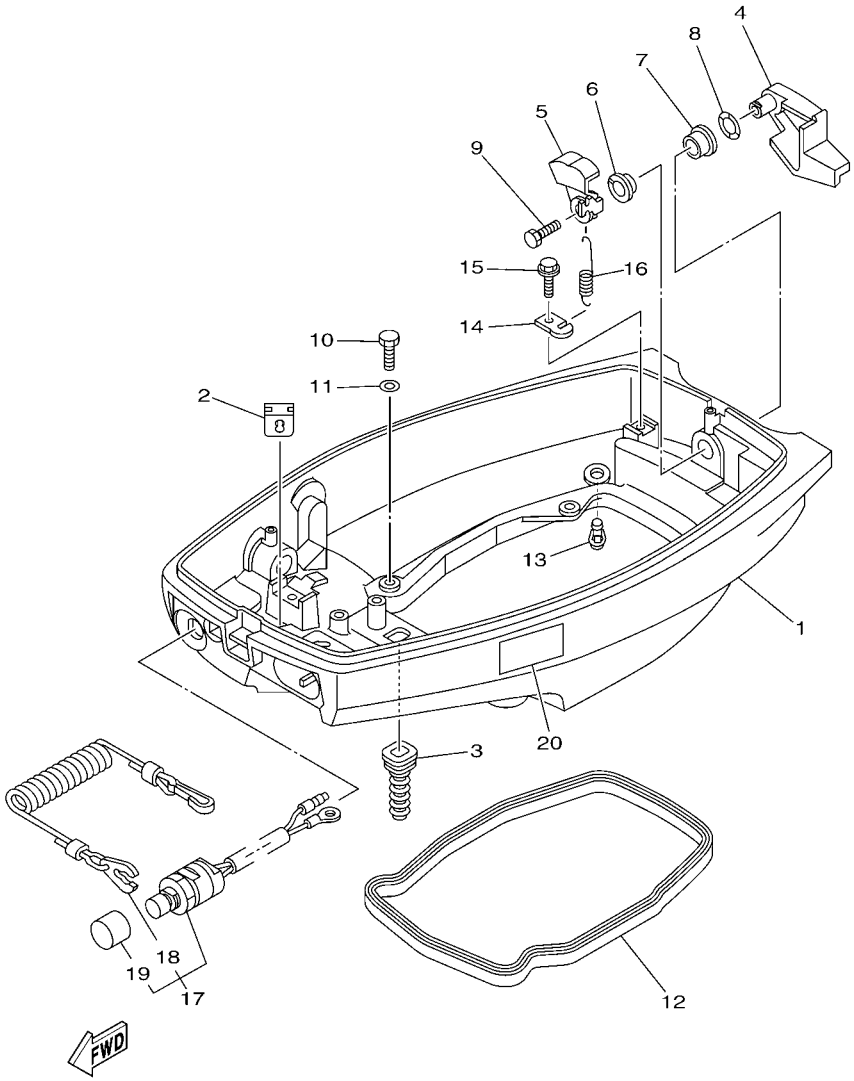

FIG. 11 BOTTOM COWLING CUBIERTA INFERIOR

REF. NO.	PART NO. CODIGO Nº	DESCRIPTION DESCRIPCION	6B3D	6B4D				REMARKS OBSERVACIONES
1	6B4–42711–00–4D	COWLING, BOTTOM 1 CUBIERTA INFERIOR 1	1	1				
2	61N–26326–00	GROMMET TAPON PROTECTOR	1	1				
3	6B4–42727–00	GROMMET TAPON	1	1				
4	6B4–42815–00–4D	LEVER, CLAMP PALANCA ABRAZADERA	1	1				
5	6B4–42816–00	LEVER, CLAMP PALANCA ABRAZADERA	1	1				
6	90386–12M45	BUSH BUJE	1	1				
7	90386–12MA2	BUSH BUJE	1	1				
8	90206–12052	WASHER, WAVE ARANDELA ONDULADA	1	1				
9	97095–06014	BOLT PERNO	1	1				
10	97095–06016	BOLT PERNO	4	4				
11	92995–06600	WASHER ARANDELA	4	4				
12	6B4–42716–00	RUBBER, SEAL 1 SELLO DE GOMA 1	1	1				
13	6BL–44391–00	NIPPLE, HOSE NIPLE MANGUERA	1	1				
14	66T–43144–00	HOOK, SPRING GANCHO	1	1				
15	90109–06M80	BOLT PERNO	1	1				
16	90506–18009	SPRING, TENSION RESORTE DE TENSION	1	1				
17	689–82575–04	ENGINE STOP SWITCH ASSY INTERRUPTOR DE PARADA COMPL	1	1				
18	682–82556–00	.LANYARD, STOP SWITCH .CORDON DE INTERRUPTOR PARADA	1	1				
19	689–8257Y–00	.CAP .TAPA	1	1				
20	6EE–42794–40	LABEL, WARNING (GENERAL) ETIQUETA DE PRECAUCION	1	1				

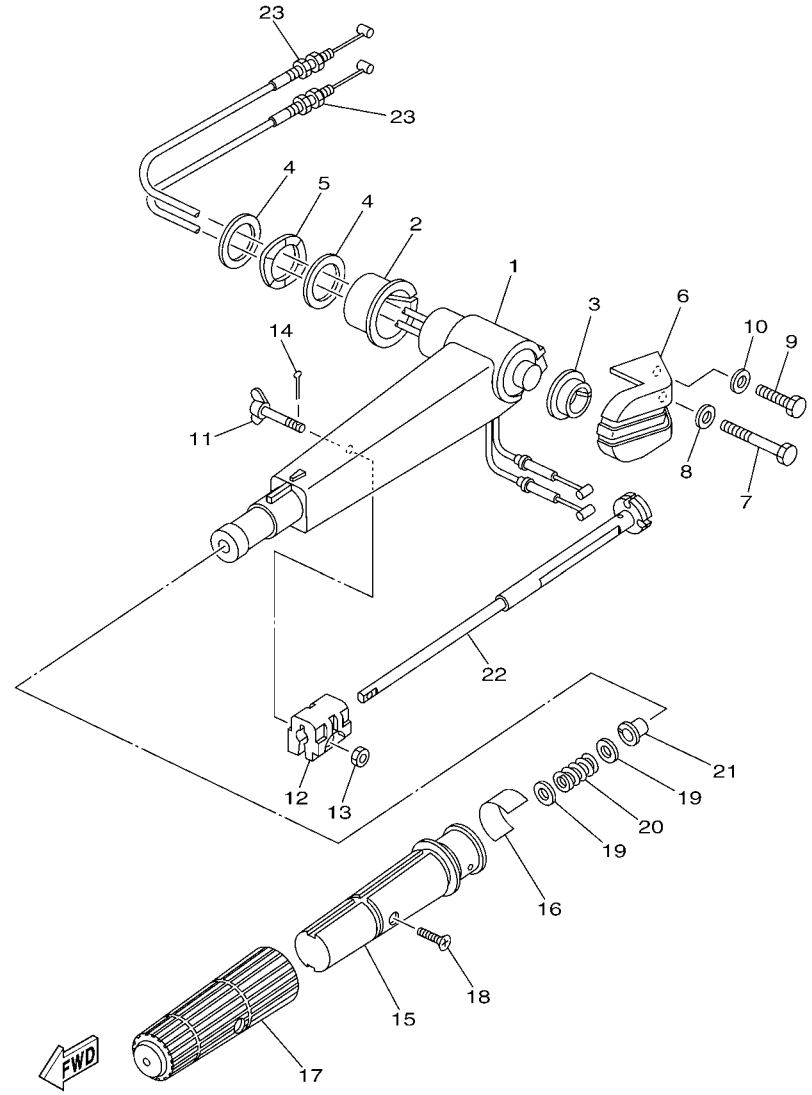

6B3D200-P120

FIG. 12 STEERING DIRECCION

REF. NO.	PART NO. CODIGO Nº	DESCRIPTION DESCRIPCION	6B3D	6B4D				REMARKS OBSERVACIONES
1	6B4–42111–00–4D	HANDLE, STEERING MANIJA DE DIRECCION	1	1				
2	90381–35001	BUSH, SOLID BUJE SOLIDO	1	1				
3	90381–20001	BUSH, SOLID BUJE SOLIDO	1	1				
4	90201–28013	WASHER, PLATE ARANDELA PLANA	2	2				
5	90206–28001	WASHER, WAVE ARANDELA ONDULADA	1	1				
6	6B4–42131–00–4D	COVER, HANDLE STEERING CUBIERTA MANIJA DIRRECCION	1	1				
7	97095–08055	BOLT PERNO	1	1				
8	92995–08600	WASHER ARANDELA	1	1				
9	97095–08030	BOLT PERNO	1	1				
10	92995–08600	WASHER ARANDELA	1	1				
11	6B4–42125–00	BOLT, FRICTION ADJUSTING TORNILLO FRICCION ADJUSTA	1	1				
12	6B4–42126–00	FRICTION, STEERING HANDLE GRIP FRICCION DE MANGO DIRECCION	1	1				
13	95380–06600	NUT, HEXAGON TUERCA	1	1				
14	91490–16010	PIN. COTTER CHAVETA	1	1				
15	6B4–42119–00	GRIP, STEERING HANDLE MANGO, MANIJA DE DIRRECCION	1	1				
16	6F5–42137–20	INDICATOR, THROTTLE INDICADOR ACELERADOR	1	1				
17	6G1–42177–00	RUBBER, HANDLE HULE DE MANIJA	1	1				
18	90152–05011	SCREW, COUNTERSUNK TORNILLO EMBUTIDO	1	1				
19	90201–10M02	WASHER, PLATE ARANDELA PLANA	2	2				
20	90501–23215	SPRING, COMPRESSION RESORTE DE COMPRESION	1	1				
21	90386–08032	BUSH BUJE	1	1				
22	6B4–42138–00	LEVER, THROTTLE PLANCA DE ACELERACION	1	1				
23	6B4–26301–00	THROTTLE CABLE ASSY CABLE DE ACELERADOR COMPLETO	2	2				

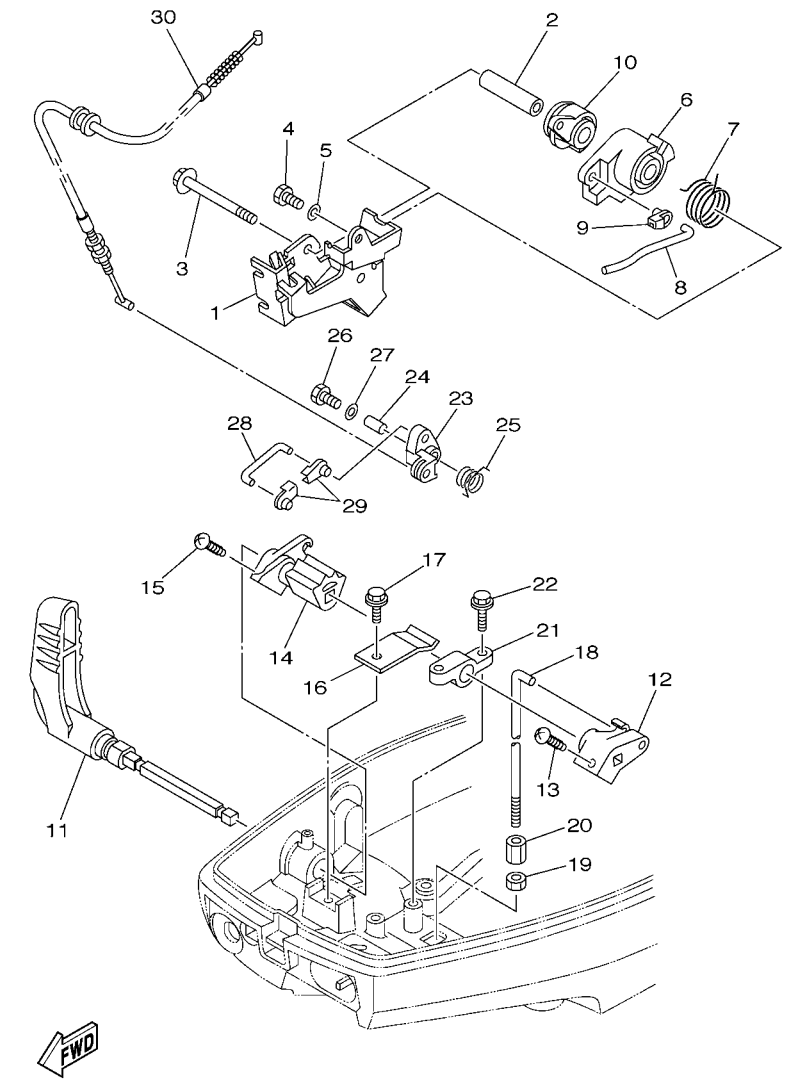

6B31200-3120

FIG. 13 CONTROL — CONTROL

REF. NO.	PART NO. CODIGO Nº	DESCRIPTION DESCRIPCION	6B3D	6B4D				REMARKS OBSERVACIONES
1	63V–14497–02	STAY, THROTTLE WIRE SOPORTE VALVULA DE OBTURACION	1	1				
2	90387–06M50	COLLAR ESPACIADOR	1	1				
3	95895–06065	BOLT, FLANGE TORNILLO DE REBORDE	1	1				
4	97095–06012	BOLT PERNO	1	1				
5	92995–06600	WASHER ARANDELA	1	1				
6	6B4–41283–00	LEVER, FREE ACCEL. PALANCA	1	1				
7	90508–20M38	SPRING, TORSION RESORTE DE TORSION	1	1				
8	63V–41211–00	LINK, ACCEL. ESLABON, ACELERADOR	1	1				
9	6J8–41262–00	JOINT, CHOKE LEVER CONECTOR DE AHOGADOR	1	1				
10	6B4–41638–00	PULLEY POLEA	1	1				
11	6B4–44111–01–4D	HANDLE, GEAR SHIFT MANIJA DE CAMBIO DE MARCHAS	1	1				
12	6B4–44121–00	LEVER, SHIFT ROD PALANCA VARILLA CAMBIOS	1	1				
13	97780–40520	SCREW, TAPPING TORNILLO DE CABEZA DE CONO ACH	1	1				
14	6B4–44125–00	LEVER, SHIFT ROD PALANCA VARILLA CAMBIOS	1	1				
15	97780–40520	SCREW, TAPPING TORNILLO DE CABEZA DE CONO ACH	1	1				
16	6B4–44116–00	SPRING RESORTE	1	1				
17	90109–06M80	BOLT PERNO	1	1				
18	6B4–44143–00	ROD, SHIFT VARILLA DE CAMBIO	1	1				
19	95380–06700	NUT TUERCA	1	1				
20	61N–44146–00	CONNECTOR, SHIFT ROD 2 CONECTOR VARILLA DE CAMBIO 2	1	1				
21	6B4–41662–00	BRACKET 2 SOPORTE 2	1	1				
22	90109–06M81	BOLT PERNO	2	2				
23	6B4–15746–00	ARM BRAZO	1	1				
24	90387–06M06	COLLAR ESPACIADOR	1	1				
25	90508–08M39	SPRING, TORSION RESORTE DE TORSION	1	1				
26	97095–06020	BOLT PERNO	1	1				
27	92995–06600	WASHER ARANDELA	1	1				

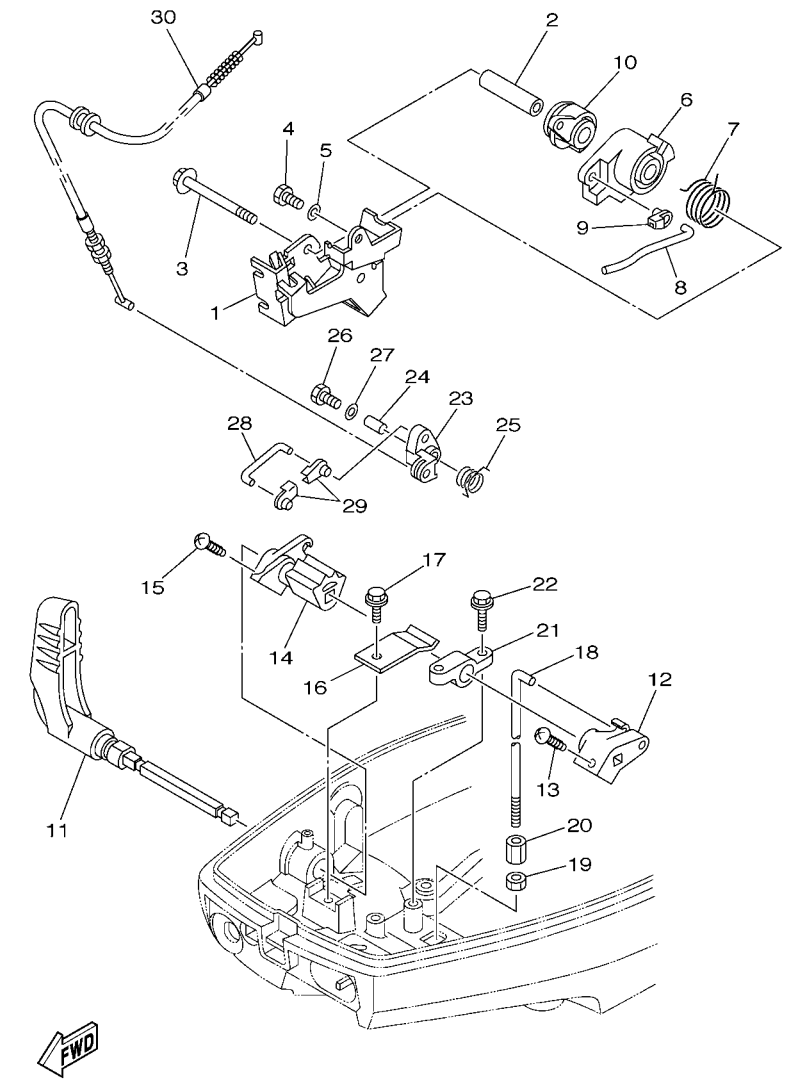

FIG. 13 CONTROL — CONTROL

REF. NO.	PART NO. CODIGO Nº	DESCRIPTION DESCRIPCION	6B3D	6B4D				REMARKS OBSERVACIONES
28	6L2–15747–00	LINK ESLABON	1	1				
29	6J8–41262–00	JOINT, CHOKE LEVER CONECTOR DE AHOGADOR	2	2				
30	6B4–15770–00	CABLE COMP., STARTER STOP CABLECOMPL DE SEGURO ARRANQUE	1	1				

FIG. 14 BRACKET 1 SOPORTE 1

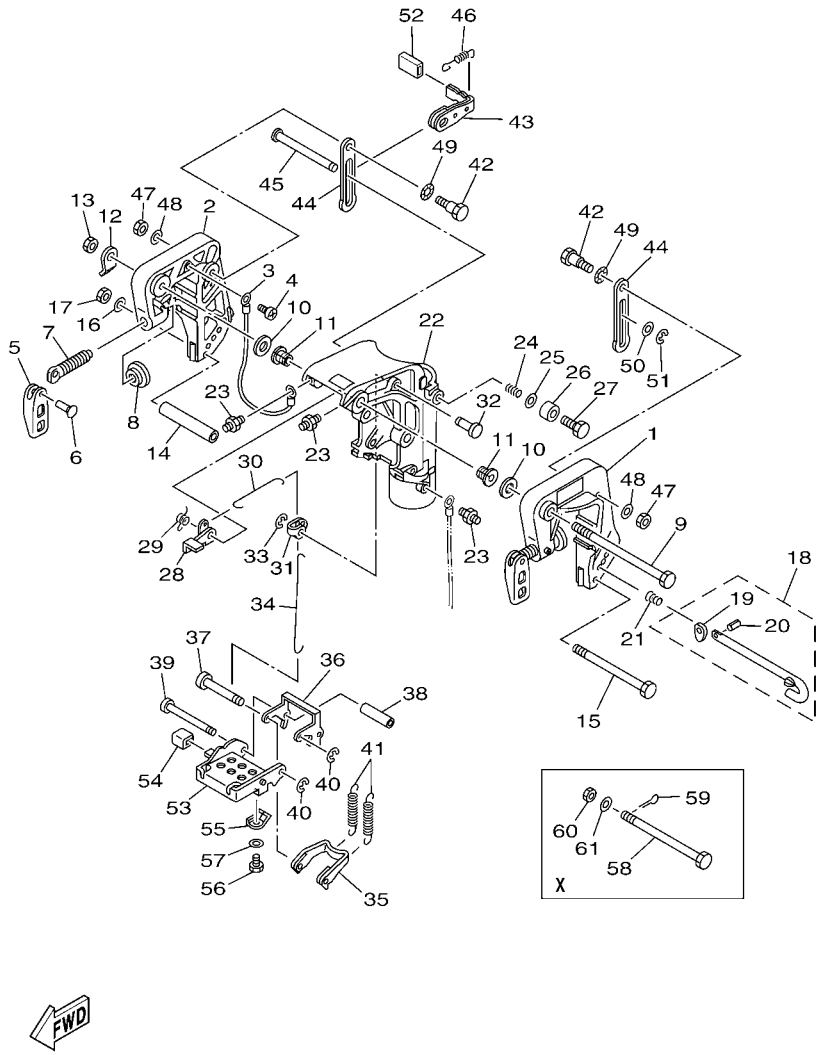

REF. NO.	PART NO. CODIGO Nº	DESCRIPTION DESCRIPCION	6B3D	6B4D				REMARKS OBSERVACIONES
1	682–43111–05–4D	BRACKET, CLAMP 1 SOPORTE DE LA ABRAZADERA 1	1	1				
2	682–43112–05–4D	BRACKET, CLAMP 2 SOPORTE DE LA ABRAZADERA 2	1	1				
3	6E5–82148–00	WIRE, LEAD 4 CABLE CONDUCTOR 4	1	1				
4	97885–06008	SCREW, PAN HEAD TORNILLO A MUESCA	1	1				
5	663–43118–01–4D	HANDLE, TRANSOM CLAMP MANIJA DE LA ABRAZADERA DEL ES	2	2				
6	90243–04007	PIN PASADOR	2	2				
7	6E7–43116–00	SCREW, TRANSOM CLAMP TORNILLO DE ABRAZADERA	2	2				
8	648–43114–01	PAD, TRANSOM CLAMP ARANDELA DE ABRAZADERA	2	2				
9	90101–12013	BOLT TORNILLO	1	1				
10	90201–12018	WASHER, PLATE ARANDELA PLANA	2	2				
11	90381–12001	BUSH, SOLID BUJE SOLIDO	2	2				
12	6B4–43113–00	PLATE, CLAMP BRACKET PLACA ABRAZADERA SOPORTE	1	1				
13	95780–12300	NUT, FLANGE TUERCA	1	1				
14	90387–06M13	COLLAR ESPACIADOR	1	1				
15	90101–06M29	BOLT TORNILLO	1	1				
16	92995–06600	WASHER ARANDELA	1	1				
17	95380–06700	NUT TUERCA	1	1				
18	689–43160–00	TILT ROD ASSY VARILLA DE BASCULACION COMPL.	1	1				S(17.4"),L(22.4") S(17.4"),L(22.4")
19	689–43165–00	.PLATE, TILT LOCK .PLACA DE TOPE, VARILLA SEGURID	1	1				
20	91690–30008	.PIN, SPRING .PASADOR DE RESORTE	1	1				
21	90502–10M07	SPRING, CONICAL RESORTE CONICO	1	1				S(17.4"),L(22.4") S(17.4"),L(22.4")
22	682–43311–07–4D	BRACKET, SWIVEL 1 SOPORTE GIRATORIO 1	1	1				
23	93700–06M03	NIPPLE, GREASE BOQUILLA DE ENGRASAR	3	3				
24	90501–18M00	SPRING, COMPRESSION RESORTE DE COMPRESION	1	1				
25	92990–08600	WASHER, PLATE ARANDELA PLANA	1	1				
26	676–43373–00	SEAL, DAMPER SELLO DE GOMA	1	1				
27	97075–08025	BOLT PERNO	1	1				

FIG. 14 BRACKET 1 SOPORTE 1

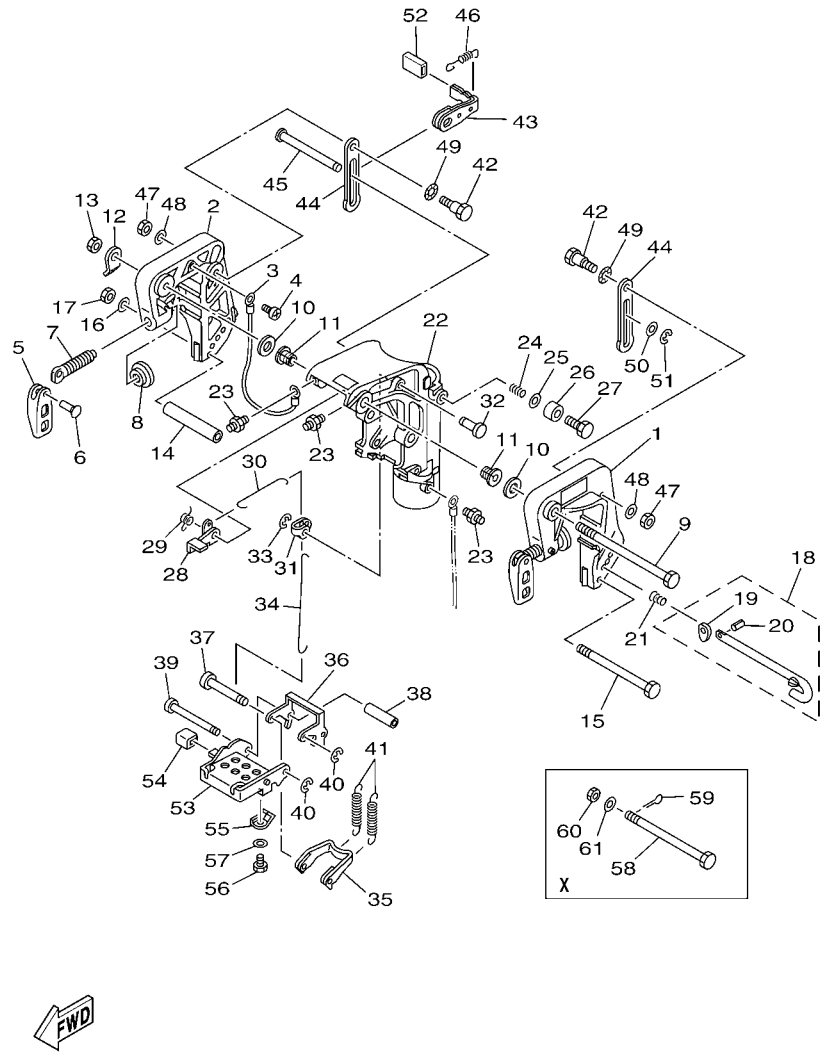

REF. NO.	PART NO. CODIGO Nº	DESCRIPTION DESCRIPCION	6B3D	6B4D				REMARKS OBSERVACIONES
28	6B4–43631–00	LEVER, TILT PALANCA DE INCLINACION	1	1				
29	90508–14018	SPRING, TORSION RESORTE DE TORSION	1	1				
30	682–43616–00	ROD, TILT LOCK VARILLA SEGURO DE INCLINACION	1	1				
31	682–43641–01	LEVER, TILT PALANCA DE INCLINACION	1	1				
32	90249–06M23	PIN PASADOR	1	1				
33	99080–05600	CIRCLIP PRESILLA REDONDA	1	1				
34	682–43617–00	ROD, TILT LOCK VARILLA SEGURO DE INCLINACION	1	1				
35	682–43614–01	PLATE, TILT LOCK PLACA DE SEGURO DE INCLINACION	1	1				
36	682–43615–02	PLATE, TILT LOCK PLACA DE SEGURO DE INCLINACION	1	1				
37	682–43611–01	SHAFT, TILT LOCK EJE SEGURO INCLINACION	1	1				
38	90387–06M20	COLLAR ESPACIADOR	1	1				
39	682–43659–01	SHAFT, REVERSE LOCK EJE SEGURO DE REVERSA	1	1				
40	99080–05600	CIRCLIP PRESILLA REDONDA	2	2				
41	90506–26M01	SPRING, TENSION RESORTE DE TENSION	2	2				S(17.4"),L(22.4") S(17.4"),L(22.4")
	90506–26M07	SPRING, TENSION RESORTE DE TENSION		2				X(28.0") X(28.0")
42	90109–06M05	BOLT PERNO	2	2				
43	6B4–43181–00	LEVER, TILT STOP 1 PALANCA TOPE INCLINACION 1	1	1				
44	6B4–43627–00	STOPPER RETEN	2	2				
45	90249–10003	PIN PASADOR	1	1				
46	90506–12002	SPRING, TENSION RESORTE DE TENSION	1	1				
47	95680–06100	NUT, U TUERCA U	2	2				
48	92990–06600	WASHER, PLATE ARANDELA PLANA	2	2				
49	90206–10M24	WASHER, WAVE ARANDELA ONDULADA	2	2				
50	90202–10M56	WASHER, PLATE ARANDELA DE PLANA	1	1				
51	99080–09600	CIRCLIP PRESILLA REDONDA	1	1				
52	682–43318–01	COVER CUBIERTA	1	1				
53	6B4–43681–10	LEVER, SHALLOW WATER DRIVE 1 PALANCA 1	1	1				

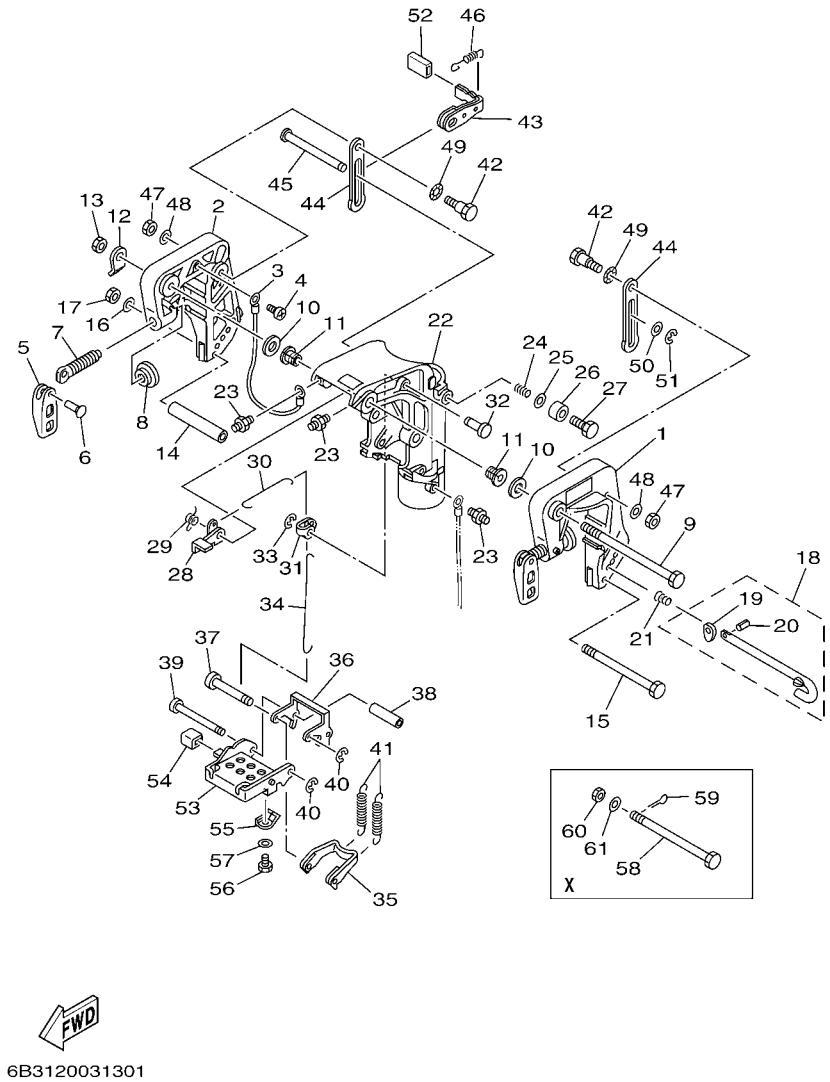

FIG. 14 BRACKET 1 SOPORTE 1

REF. NO.	PART NO. CODIGO Nº	DESCRIPTION DESCRIPCION	6B3D	6B4D				REMARKS OBSERVACIONES
54	682–43318–01	COVER CUBIERTA	1	1				
55	682–43643–00	SPRING RESORTE	1	1				
56	97095–06008	BOLT PERNO	1	1				
57	92990–06600	WASHER, PLATE ARANDELA PLANA	1	1				
58	90102–08M01	BOLT, WITH HOLE PERNO CON ORIFICIO		1				X(28.0") X(28.0")
59	91490–20015	PIN. COTTER CHAVETA		1				X(28.0") X(28.0")
60	90171–08M00	NUT, CASTLE TUERCA ENTALLADA		1				X(28.0") X(28.0")
61	92990–08600	WASHER, PLATE ARANDELA PLANA		1				X(28.0") X(28.0")

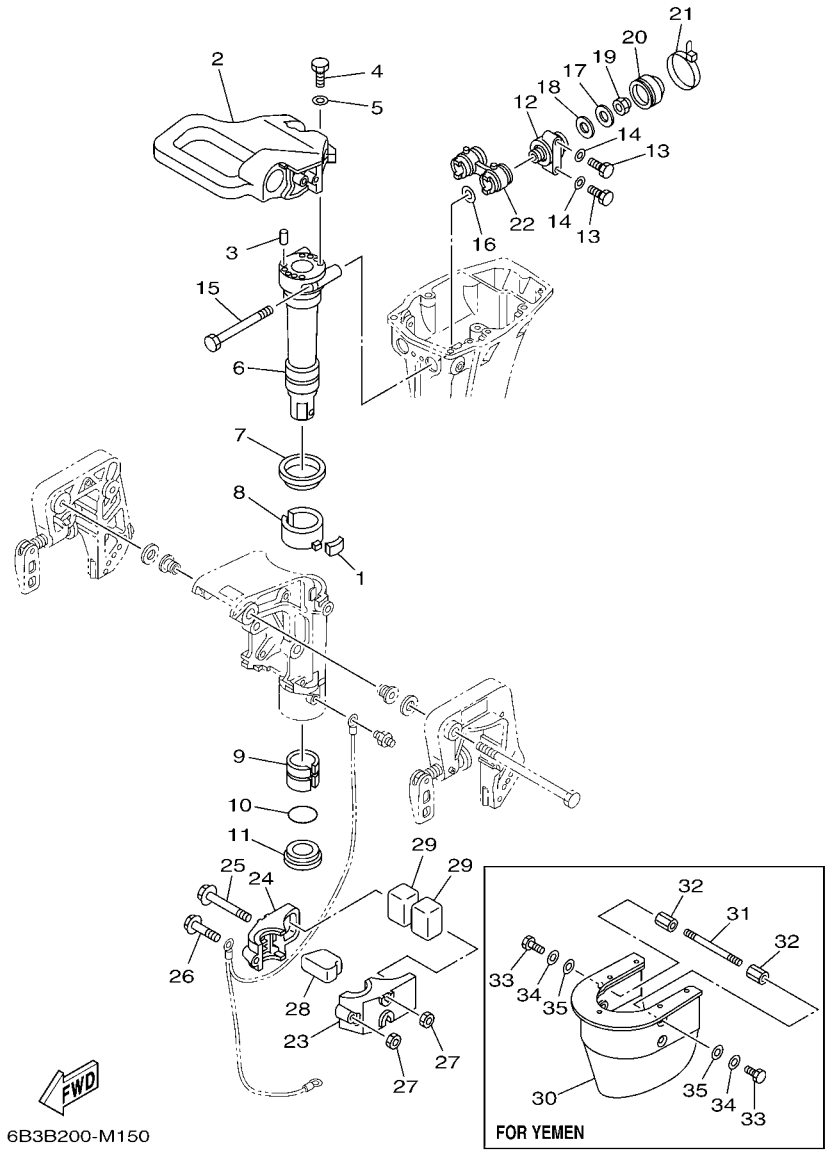

6B3B200-M150

FIG. 15 BRACKET 2 SOPORTE 2

REF. NO.	PART NO. CODIGO Nº	DESCRIPTION DESCRIPCION	6B3D	6B4D				REMARKS OBSERVACIONES
1	648–42528–00	PLATE, FRICTION PIEZA DE FRICCION	1	1				
2	6B4–42511–00–4D	BRACKET, STEERING SOPORTE DE DIRECCION	1	1				
3	93606–12019	PIN, DOWEL PASADOR DE CLAVIJA	2	2				
4	97095–06025	BOLT PERNO	3	3				
5	92995–06600	WASHER ARANDELA	3	3				
6	682–42521–00	SHAFT, STEERING PIVOT EJE PIVOTE DE DIRECCION	1	1				
7	90209–52M01	WASHER ARANDELA DE SEPARACION	1	1				
8	682–42537–00	BUSHING, PIVOT SHAFT BUJE DEL PIVOTE DE LA FLECHA	1	1				
9	90386–40M09	BUSH BUJE	1	1				
10	93210–40M10	O-RING ANILLO O	1	1				
11	90386–40M08	BUSH BUJE	1	1				
12	682–44514–01–CA	MOUNT DAMPER, UPPER SIDE AMORTIGUADOR LADO SUPERIOR	2	2				S(17.4"),L(22.4") S(17.4"),L(22.4")
	682–44514–31–CA	MOUNT DAMPER, UPPER SIDE AMORTIGUADOR LADO SUPERIOR		2				X(28.0") X(28.0")
13	97095–06025	BOLT PERNO	4	4				
14	92995–06600	WASHER ARANDELA	4	4				
15	90101–08M30	BOLT TORNILLO	2	2				
16	90201–08M12	WASHER, PLATE ARANDELA PLANA	2	2				
17	90201–08M13	WASHER, PLATE ARANDELA PLANA	2	2				
18	90202–13M02	WASHER, PLATE ARANDELA DE PLANA	2	2				
19	90185–08057	NUT, SELF-LOCKING TUERCA AUTOBLOCANTE	2	2				
20	682–44522–01	SEAL SELLO DE GOMA	2	2				
21	90465–11M52	CLAMP BRIDA	2	2				
22	682–44521–01	SEAL SELLO DE GOMA	1	1				
23	682–44551–02–4D	HOUSING, LOWER MOUNT RUBBER 1 CAJA AMORTIGUADOR INFERIOR HU	1	1				
24	682–44552–02–4D	HOUSING, LOWER MOUNT RUBBER 2 CAJA AMORTIGUADOR INFERIOR HU	1	1				
25	90119–08M45	BOLT, WITH WASHER TORNILLO CON ARANDELA	2	2				EXCEPT FOR YEM EXCEPT FOR YEM
26	97575–08555	BOLT, WITH WASHER PERNO CON ARANDELA	1	1				

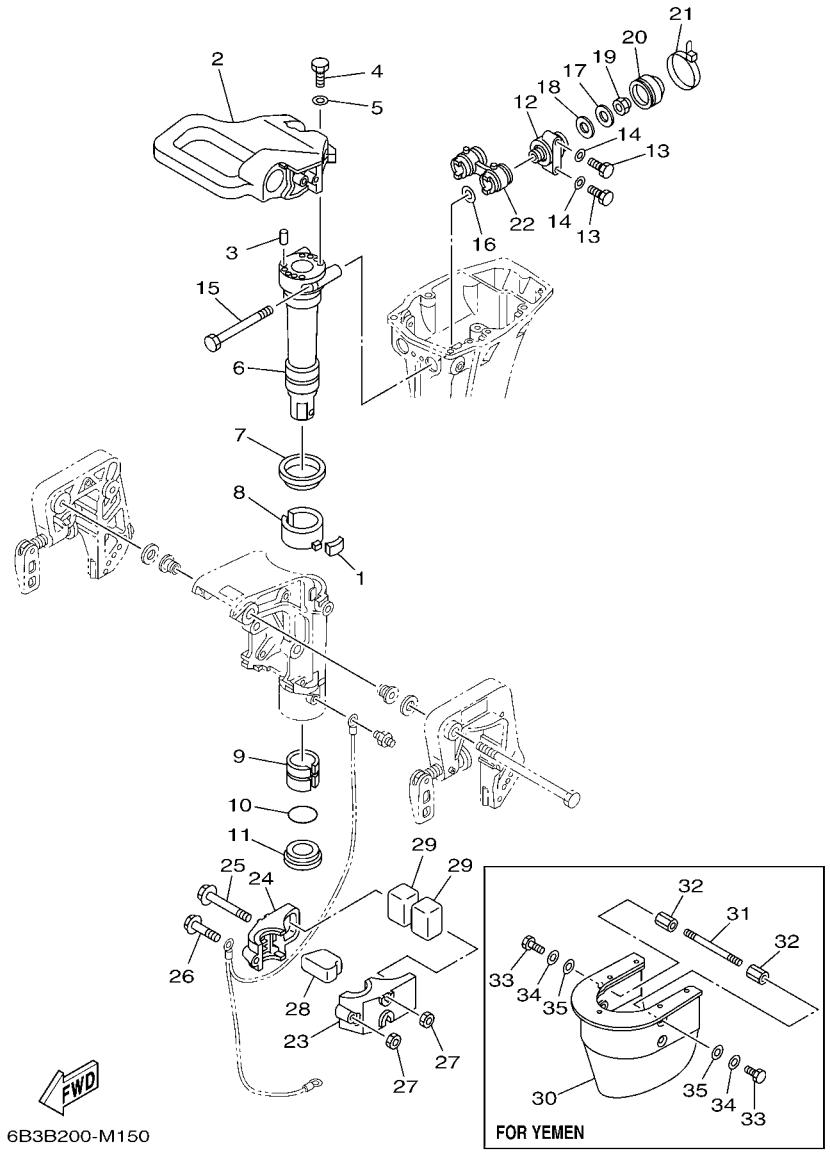

FIG. 15 BRACKET 2 SOPORTE 2

REF. NO.	PART NO. CODIGO Nº	DESCRIPTION DESCRIPCION	6B3D	6B4D				REMARKS OBSERVACIONES
27	95380–08700	NUT TUERCA	3	3				EXCEPT FOR YEM EXCEPT FOR YEM
	95380–08700	NUT TUERCA		1				FOR YEM FOR YEM
28	682–44557–00	MOUNT DAMPER, LOWER FRONT AMORTIGUADOR DE HULE FRENTE IN	1	1				
29	682–44555–30	MOUNT DAMPER, LOWER SIDE AMORTIGUADOR DE HULE LADO INFE	2	2				S(17.4") S(17.4")
	6B4–44555–30	MOUNT DAMPER, LOWER SIDE AMORTIGUADOR DE HULE LADO INFE	2	2				L(22.4"),X(28.0") L(22.4"),X(28.0")
30	6B4–45151–00–4D	COVER, UPPER CASING CUBIERTA FUNDA SUPERIOR		1				FOR YEM FOR YEM
31	90116–08013	BOLT, STUD ESPARRAGO		2				FOR YEM FOR YEM
32	90170–08009	NUT TUERCA		4				FOR YEM FOR YEM
33	97095–08012	BOLT PERNO		4				FOR YEM FOR YEM
34	92995–08100	WASHER ARANDELA		4				FOR YEM FOR YEM
35	92990–08600	WASHER, PLATE ARANDELA PLANA		4				FOR YEM FOR YEM

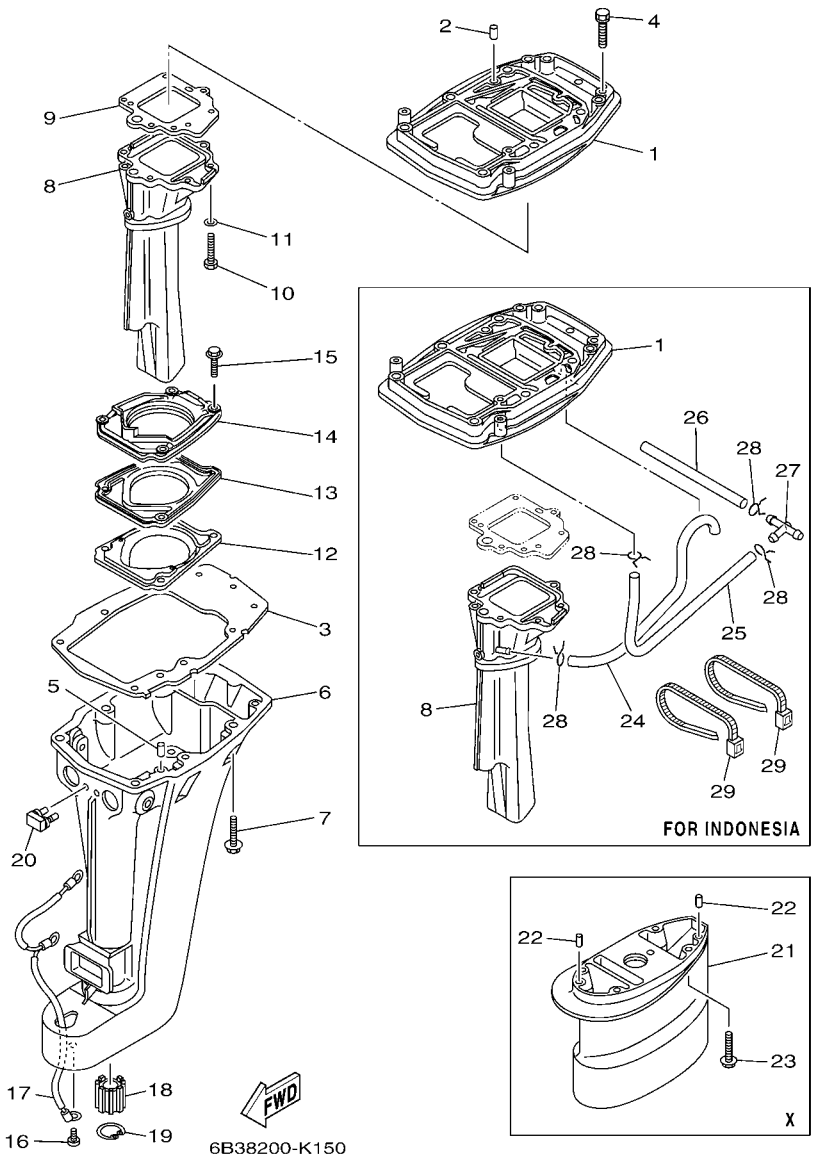

FIG. 16 UPPER CASING FUNDA SUPERIOR

REF. NO.	PART NO. CODIGO Nº	DESCRIPTION DESCRIPCION	6B3D	6B4D				REMARKS OBSERVACIONES
1	6B4–41137–A0–CA	GUIDE, EXHAUST GUIA DE ESCAPE	1	1				
	6B4–41137–B0–CA	GUIDE, EXHAUST GUIA DE ESCAPE		1				FOR IDN FOR IDN
2	93606–12019	PIN, DOWEL PASADOR DE CLAVIJA	2	2				
3	682–45113–A2	GASKET, UPPER CASING EMPAQUE	1	1				
	6B4–45113–00	GASKET, UPPER CASING EMPAQUE		1				FOR IDN FOR IDN
4	90119–06MA4	BOLT, WITH WASHER TORNILLO CON ARANDELA	2	2				
5	93606–12019	PIN, DOWEL PASADOR DE CLAVIJA	2	2				
6	682–45111–05–4D	CASING, UPPER CAJA SUPERIOR	1	1				S(17.4") S(17.4")
	682–45111–15–4D	CASING, UPPER CAJA SUPERIOR	1	1				L(22.4"),X(28.0") L(22.4"),X(28.0")
7	97575–08550	BOLT, WITH WASHER PERNO CON ARANDELA	6	6				
8	6B4–41131–00–CA	MANIFOLD, EXT. 1 TUBO MULTIPLE DE ESCAPE	1	1				UR UR
	6B4–41131–10–CA	MANIFOLD, EXT. 1 TUBO MULTIPLE DE ESCAPE	1	1				UR ANTI-CORROSIVE UR ANTI-CORROSIVE
	6B4–41131–20–CA	MANIFOLD, EXT. 1 TUBO MULTIPLE DE ESCAPE		1				UR FOR IDN UR FOR IDN
9	682–41133–A0	GASKET, EXHAUST MANIFOLD 1 EMPAQUE ESCAPE MULTIPLE	1	1				
10	97095–06020	BOLT PERNO	6	6				
11	92995–06600	WASHER ARANDELA	6	6				
12	682–45126–01–CA	PLATE, SEAL DAMPER PLACA DE SELLO DE HULE	1	1				
13	682–45127–00	SEAL SELLO DE GOMA	1	1				
14	682–41116–00–CA	PROTECTOR PROTECTOR	1	1				S(17.4") S(17.4")
	6B4–41116–A0–CA	PROTECTOR PROTECTOR	1	1				L(22.4"),X(28.0") L(22.4"),X(28.0")
15	90105–06M01	BOLT, FLANGE TORNILLO	4	4				
16	90157–06M06	SCREW, PAN HEAD TORNILLO CABEZA CONICA PLANA	1	1				
17	6E7–82127–00	WIRE, LEAD 2 CABLE CONDUCTOR 2	1	1				
18	6B4–45318–00	BUSHING, DRIVE SHAFT BUJE, EJE DE MANDO	1	1				L(22.4"),X(28.0") L(22.4"),X(28.0")
19	93420–30042	CIRCLIP SEGURO	1	1				L(22.4"),X(28.0") L(22.4"),X(28.0")
20	682–44532–00	STOPPER, UPPER MOUNT RETEN	1	1				
21	682–45211–31–4D	EXTENSION EXTENSION		1				X(28.0") X(28.0")

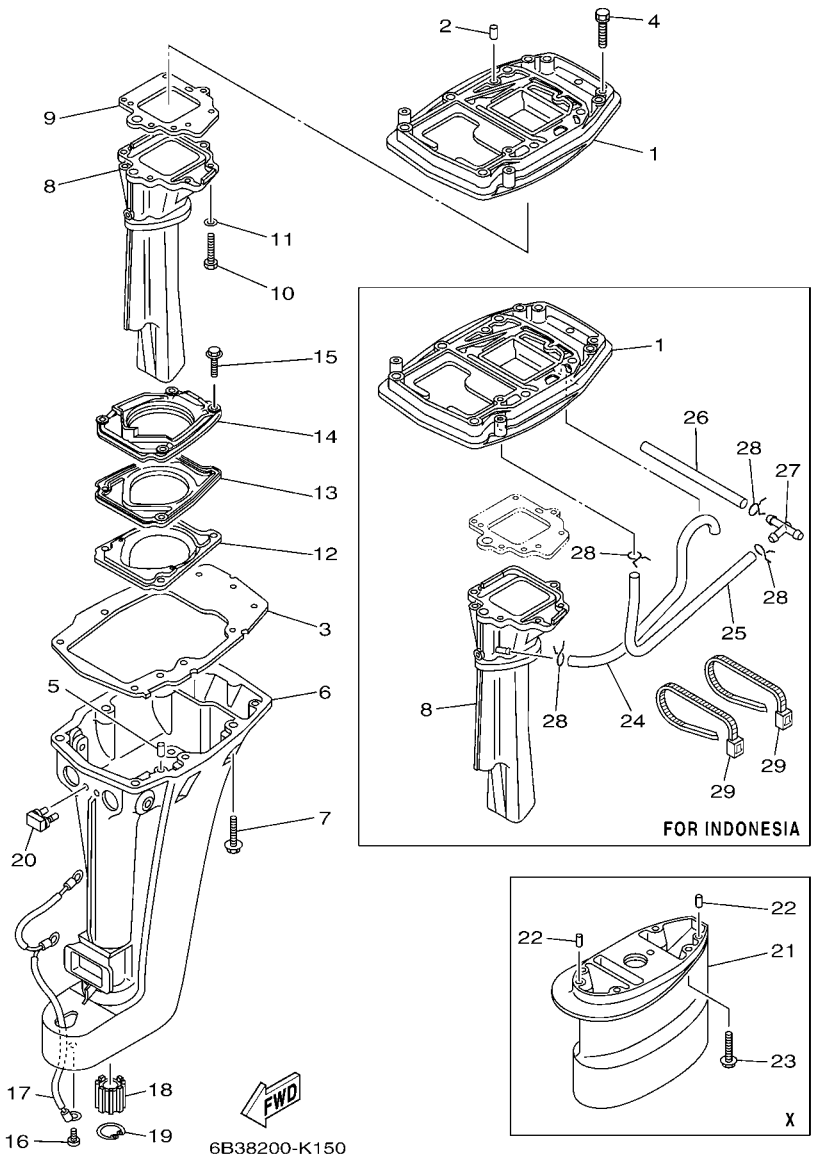

FIG. 16 UPPER CASING FUNDA SUPERIOR

REF. NO.	PART NO. CODIGO Nº	DESCRIPTION DESCRIPCION	6B3D	6B4D				REMARKS OBSERVACIONES
22	93606–12019	PIN, DOWEL PASADOR DE CLAVIJA		2				X(28.0") X(28.0")
23	97575–08535	BOLT, WITH WASHER PERNO CON ARANDELA		4				X(28.0") X(28.0")
24	6B4–45135–00	PIPE TUBO 1		1				FOR IDN FOR IDN
25	90445–07022	HOSE (L110) TUBO (L110)		1				FOR IDN FOR IDN
26	90445–07MA6	HOSE (L90) TUBO (L90)		1				FOR IDN FOR IDN
27	6E0–24378–00	PIPE, JOINT 3 TUBO DE UNION 3		1				FOR IDN FOR IDN
28	90467–06016	CLIP PRESILLA		4				FOR IDN FOR IDN
29	90465–13M36	CLAMP BRIDA		2				FOR IDN FOR IDN

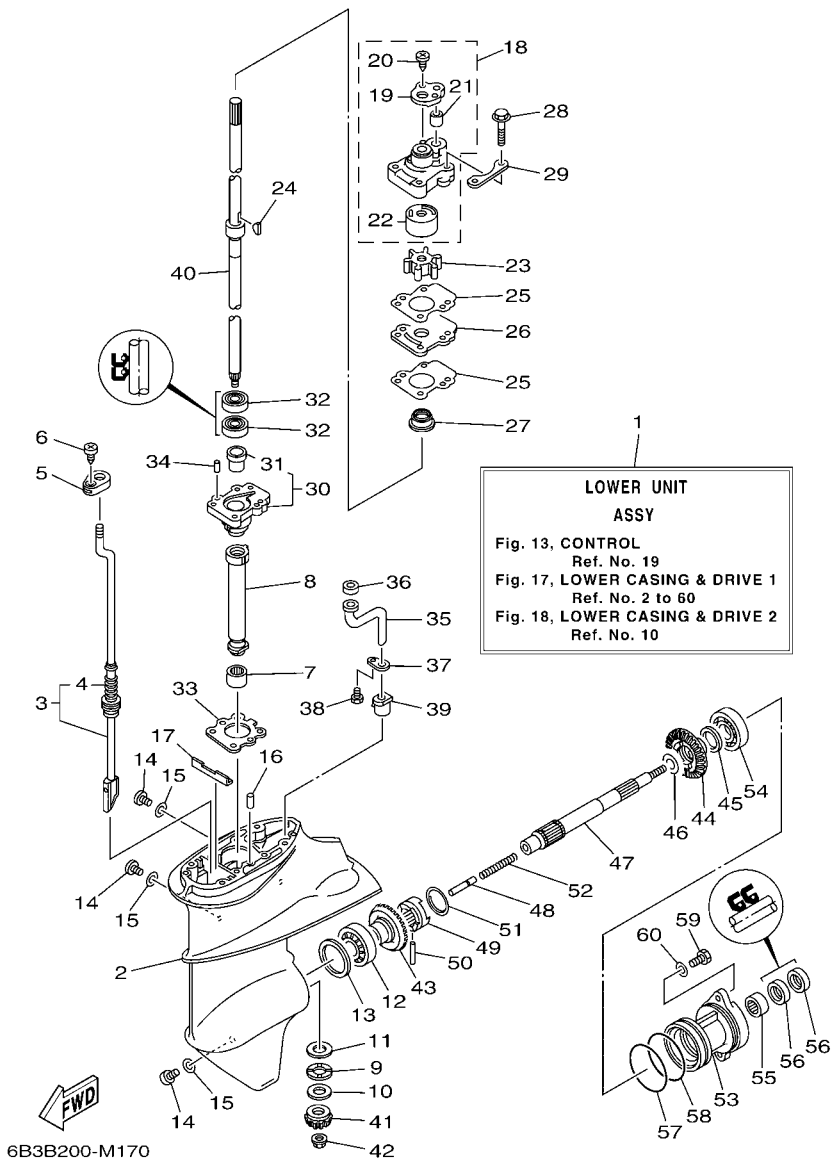

FIG. 17 LOWER CASING & DRIVE 1 IMPULSOR E INFERIOR 1

REF. NO.	PART NO. CODIGO Nº	DESCRIPTION DESCRIPCION	6B3D	6B4D				REMARKS OBSERVACIONES
1	6B4–45300–01–4D	LOWER UNIT ASSY CONJUNTO UNIDAD INFERIOR	1	1				S(17.4") S(17.4")
	6B4–45300–11–4D	LOWER UNIT ASSY CONJUNTO UNIDAD INFERIOR	1	1				L(22.4") L(22.4")
	6B4–45300–31–4D	LOWER UNIT ASSY CONJUNTO UNIDAD INFERIOR		1				X(28.0") X(28.0")
2	6E8–45311–01–4D	CASING, LOWER FUNDA INFERIOR	1	1				
3	6B4–44150–00	SHIFT CAM ASSY CONJUNTO EJE LEVA COMPL.	1	1				S(17.4") S(17.4")
	6B4–44150–10	SHIFT CAM ASSY CONJUNTO EJE LEVA COMPL.	1	1				L(22.4") L(22.4")
	6B4–44150–30	SHIFT CAM ASSY CONJUNTO EJE LEVA COMPL.		1				X(28.0") X(28.0")
4	6B4–44147–00	.BOOT, SHIFT ROD .HULE DE VARILLA	1	1				
5	682–44176–00	BRACKET SOPORTE	1	1				
6	97780–50110	SCREW, TAPPING TORNILLO DE CABEZA DE CONO ACH	1	1				
7	93315–314V8	BEARING COJINETE DE RODILLOS	1	1				
8	6E7–45536–00	SLEEVE, DRIVE SHAFT CAMISA EJE DE MANDO	1	1				
9	90209–14011	WASHER ARANDELA DE SEPARACION	1	1				
10	6E8–45587–10	SHIM (T:1.13MM) LAINA (T:1.13MM)	1	1				UR UR
	6E8–45587–30	SHIM (T:1.20MM) LAINA (T:1.20MM)	1	1				UR UR
11	90201–15017	WASHER, PLATE ARANDELA PLANA	1	1				
12	93332–00005	BEARING COJINETE	1	1				
13	664–45567–01	SHIM (T:0.10MM) LAINA (T:0.10MM)	1	1				UR UR
	664–45567–10	SHIM (T:0.12MM) LAINA (T:0.12MM)	1	1				UR UR
	664–45567–20	SHIM (T:0.15MM) LAINA (T:0.15MM)	1	1				UR UR
	664–45567–30	SHIM (T:0.18MM) LAINA (T:0.18MM)	1	1				UR UR
	664–45567–40	SHIM (T:0.30MM) LAINA (T:0.30MM)	1	1				UR UR
	664–45567–50	SHIM (T:0.40MM) LAINA (T:0.40MM)	1	1				UR UR
	664–45567–60	SHIM (T:0.50MM) LAINA (T:0.50MM)	1	1				UR UR
14	90340–08002	PLUG, STRAIGHT SCREW TORNILLO, DE DRENAJE	3	3				
15	90430–08020	GASKET JUNTA	3	3				
16	93604–08062	PIN, DOWEL PASADOR DE CLAVIJA	1	1				

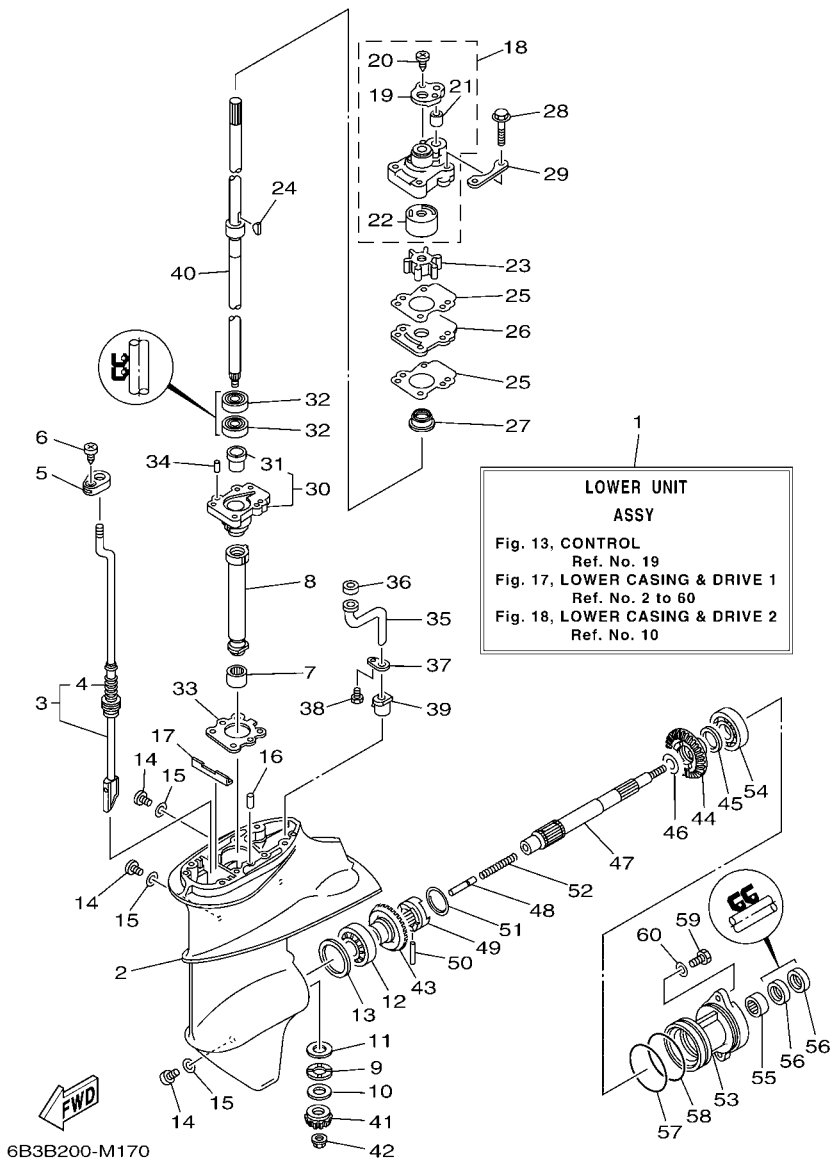

FIG. 17 LOWER CASING & DRIVE 1 IMPULSOR E INFERIOR 1

REF. NO.	PART NO. CODIGO Nº	DESCRIPTION DESCRIPCION	6B3D	6B4D				REMARKS OBSERVACIONES
17	682–45376–01	GUIDE, SEAL DAMPER GUIA DE SELLO GOMA	1	1				
18	682–44300–40	HOUSING WATER PUMP ASSY BOMBA DE AGUA	1	1				
19	682–44312–00	.COVER, WATER PUMP HOUSING .CUBIERTA CAJA BOMBA DE AGUA	1	1				
20	97780–40112	.SCREW, OVAL HEAD TAPPING .TORNILLO DE CABEZA DE CONO ACH	2	2				
21	682–44365–00	.DAMPER, WATER SEAL 1 .HULE DE SELLO DE AGUA 1	1	1				
22	682–44322–41	.INSERT, CARTRIDGE .CARTUCHO	1	1				
23	682–44352–03	IMPELLER IMPULSOR	1	1				
24	90280–03005	KEY, WOODRUFF CUNA WOODRUFF	1	1				
25	682–44315–A0	GASKET, WATER PUMP EMPAQUE	2	2				
26	682–44323–40	OUTER PLATE, CARTRIDGE PLACA EXTERIOR DEL CARTUCHO	1	1				
27	682–45344–00	COVER, OIL SEAL CUBIERTA SELLO ACEITE	1	1				
28	97595–06545	BOLT, WITH WASHER PERNO CON ARANDELA	4	4				
29	682–44328–00	PLATE PLACA	2	2				
30	6E7–45331–00–CA	HOUSING, BEARING CAJA DE COJINETE	1	1				
31	626–45316–09	.BUSHING, DRIVE SHAFT .BUJE, EJE DE MANDO	1	1				
32	93101–20001	OIL SEAL SELLO ACEITE	2	2				
33	683–45315–A0	PACKING, LOWER CASING EMPAQUE	1	1				
34	93606–12019	PIN, DOWEL PASADOR DE CLAVIJA	2	2				
35	683–44362–01	TUBE, WATER 2 TUBO DE AGUA 2	1	1				
36	683–44365–01	DAMPER, WATER SEAL 1 HULE DE SELLO DE AGUA 1	1	1				
37	683–44373–00	SET PLATE, WATER TUBE PLACA PARA FIJAR TUBO	1	1				
38	97095–06010	BOLT PERNO	1	1				
39	6E7–44366–00	DAMPER, WATER SEAL 2 GOMA DEL SELLO DE AGUA 2	1	1				
40	6B4–45501–00	DRIVE SHAFT COMP. EJE DE MANDO COMPL.	1	1				S(17.4") S(17.4")
	6B4–45501–10	DRIVE SHAFT COMP. EJE DE MANDO COMPL.	1	1				L(22.4") L(22.4")
	6B4–45501–30	DRIVE SHAFT COMP. EJE DE MANDO COMPL.		1				X(28.0") X(28.0")
41	63V–45551–00	PINION (13T) PINON (13T)	1	1				

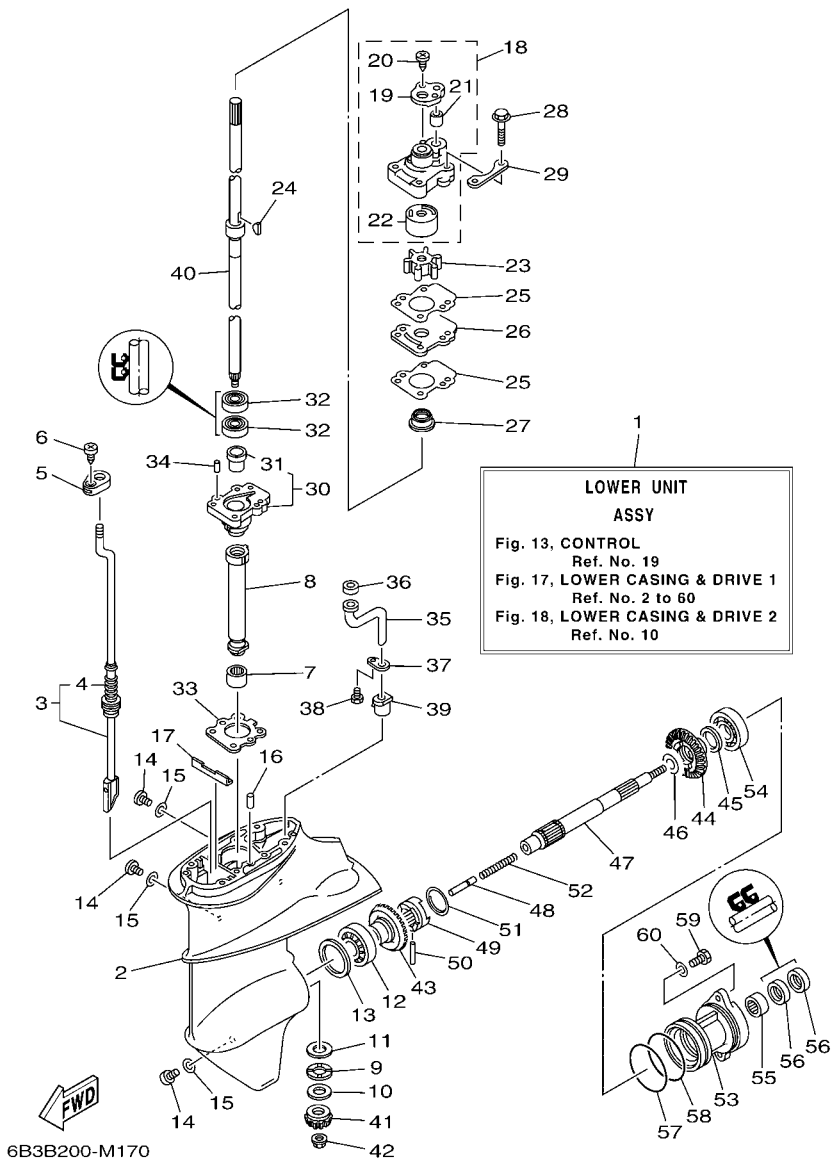

FIG. 17 LOWER CASING & DRIVE 1 IMPULSOR E INFERIOR 1

REF. NO.	PART NO. CODIGO Nº	DESCRIPTION DESCRIPCION	6B3D	6B4D				REMARKS OBSERVACIONES
42	90179–08M06	NUT TUERCA	1	1				
43	6E7–45560–01	GEAR 1 (27T) ENGRANAJE 1 (27T)	1	1				
44	6E7–45571–00	GEAR 2 (27T) ENGRANAJE 2 (27T)	1	1				
45	626–45577–00	SHIM (T:0.10MM) LAINA (T:0.10MM)	1	1				UR UR
	626–45577–10	SHIM (T:0.20MM) LAINA (T:0.20MM)	1	1				UR UR
	626–45577–20	SHIM (T:0.30MM) LAINA (T:0.30MM)	1	1				UR UR
	626–45577–30	SHIM (T:0.40MM) LAINA (T:0.40MM)	1	1				UR UR
	626–45577–40	SHIM (T:0.50MM) LAINA (T:0.50MM)	1	1				UR UR
46	90201–17682	WASHER, PLATE ARANDELA PLANA	1	1				
47	683–45611–00	SHAFT, PROPELLER EJE PROPUSOR	1	1				
48	650–45635–00	PLUNGER, SHIFT EMBOLO DE CAMBIO	1	1				
49	682–45631–00	CLUTCH, DOG EMBRAGUE DE GARRA	1	1				
50	90250–05010	PIN, STRAIGHT PASADOR CILINDRICO	1	1				
51	648–45633–00	RING, CROSS PIN ANILLO DE PASADOR	1	1				
52	90501–14M06	SPRING, COMPRESSION RESORTE DE COMPRESION	1	1				
53	683–45361–02–4D	CAP, LOWER CASING FUNDA INFERIOR	1	1				UR UR
	6B4–45361–00–4D	CAP, LOWER CASING FUNDA INFERIOR	1	1				UR ANTI-CORROSIVE UR ANTI-CORROSIVE
54	93306–00501	BEARING COJINETE	1	1				
55	93315–317U2	BEARING COJINETE DE RODILLOS	1	1				
56	93101–17001	OIL SEAL SELLO ACEITE	2	2				
57	93210–57M09	O-RING ANILLO O	1	1				
58	93210–56M80	O-RING ANILLO O	1	1				
59	97095–06020	BOLT PERNO	2	2				
60	92995–06600	WASHER ARANDELA	2	2				

FIG. 18 LOWER CASING & DRIVE 2 IMPULSOR E INFERIOR 2

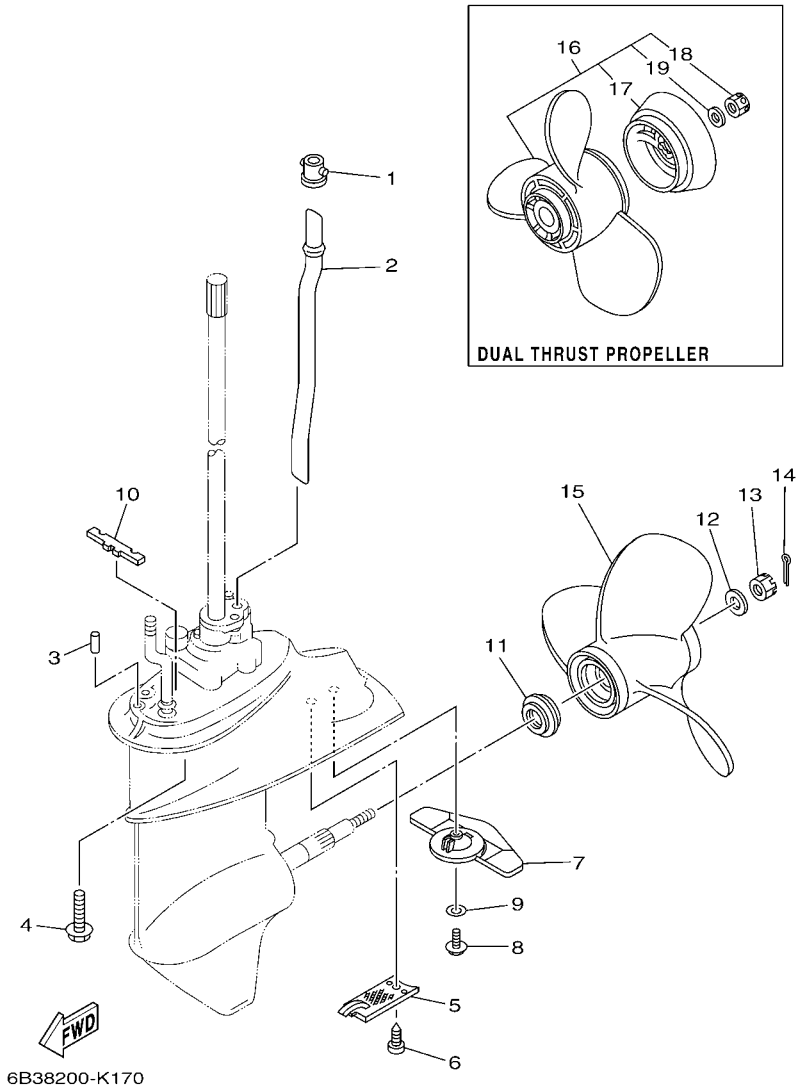

REF. NO.	PART NO. CODIGO Nº	DESCRIPTION DESCRIPCION	6B3D	6B4D				REMARKS OBSERVACIONES
1	626–44365–01	DAMPER, WATER SEAL 1 HULE DE SELLO DE AGUA 1	1	1				
2	682–44361–01	TUBE, WATER 1 TUBO DE AGUA 1	1	1				S(17.4") S(17.4")
	6B4–44361–10	TUBE, WATER 1 TUBO DE AGUA 1	1	1				L(22.4") L(22.4")
	6B4–44361–30	TUBE, WATER 1 TUBO DE AGUA 1		1				X(28.0") X(28.0")
3	93606–12019	PIN, DOWEL PASADOR DE CLAVIJA	2	2				
4	97575–08535	BOLT, WITH WASHER PERNO CON ARANDELA	4	4				
5	6E7–45214–00	COVER, WATER INLET 1 CUBIERTA ENTRADA AGUA 1	1	1				
6	97880–05012	SCREW, PAN HEAD TORNILLO DE CABEZA CON PLANA	1	1				
7	6B4–45251–00	ANODE CATODE	1	1				
8	95895–06020	BOLT, FLANGE TORNILLO DE REBORDE	1	1				
9	92990–06300	WASHER, INTERNAL TOOTH ARANDELA PLANA	1	1				
10	682–45375–01	DAMPER, SEAL GOMA DE SELLO	1	1				
11	6E7–45987–01	SPACER 1 ESPACIADOR 1	1	1				
12	90201–10M01	WASHER, PLATE ARANDELA PLANA	1	1				
13	90171–10M01	NUT, CASTLE TUERCA ENTALLADA	1	1				
14	91490–30020	PIN. COTTER CHAVETA	1	1				
15	683–45941–00	PROPELLER (3X9-1/4"X12"-J) PROPERA (3X9-1/4"X12"-J)	1	1				UR UR
	683–45943–00	PROPELLER (3X9-1/4"X10-1/2"-J) PROPERA (3X9-1/4"X10-1/2"-J)	1	1				UR UR
	683–45947–00	PROPELLER (3X9-1/4"X8"-J) PROPELA (3X9-1/4"X8"-J)	1	1				UR UR
	683–45949–00	PROPELLER (3X9-1/2"X6-1/2"-J) PROPELA (3X9-1/2"X6-1/2"-J)	1	1				UR UR
	683–45952–00	PROPELLER (3X9-1/4"X9-3/4"-J) PROPELA (3X9-1/4"X9-3/4"-J)	1	1				UR UR
	63V–45943–10	PROPELLER (3X9-1/4"X11"-J1) PROPELA (3X9-1/4"X11"-J1)	1	1				UR UR
	63V–45945–10	PROPELLER (3X9-1/4"X9"-J1) PROPELA (3X9-1/4"X9"-J1)	1	1				UR UR
	63V–45947–00	PROPELLER (3X9-1/4"X8"-J) PROPELA (3X9-1/4"X8"-J)	1	1				UR UR
	63V–45952–10	PROPELLER (3X9-1/4"X10"-J1) PROPELA (3X9-1/4"X10"-J1)	1	1				UR UR
16	683–W4591–02	PROPELLER (3X9-3/4"X8"-J) PROPELA (3X9-3/4"X8"-J)	1	1				UR UR
	683–W4592–02	PROPELLER (3X9-3/4"X6-1/2"-J) PROPELA (3X9-3/4"X6-1/2"-J)	1	1				UR UR

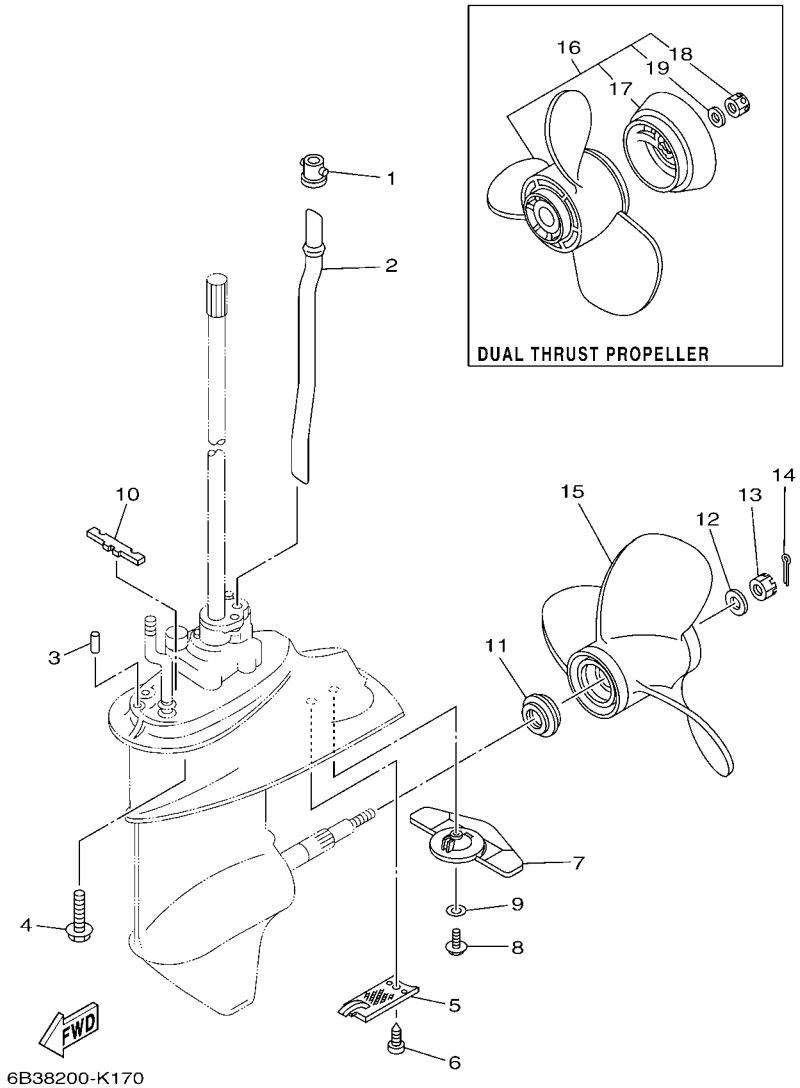

FIG. 18 LOWER CASING & DRIVE 2 IMPULSOR E INFERIOR 2

REF. NO.	PART NO. CODIGO Nº	DESCRIPTION DESCRIPCION	6B3D	6B4D				REMARKS OBSERVACIONES
17	6E7–45986–00	.RING, DEFLECTOR .ANILLO REFLECTOR	1	1				
18	90171–10M07	.NUT, CASTLE .TUERCA ENTALLADA	1	1				
19	90201–10M02	.WASHER, PLATE .ARANDELA PLANA	1	1				

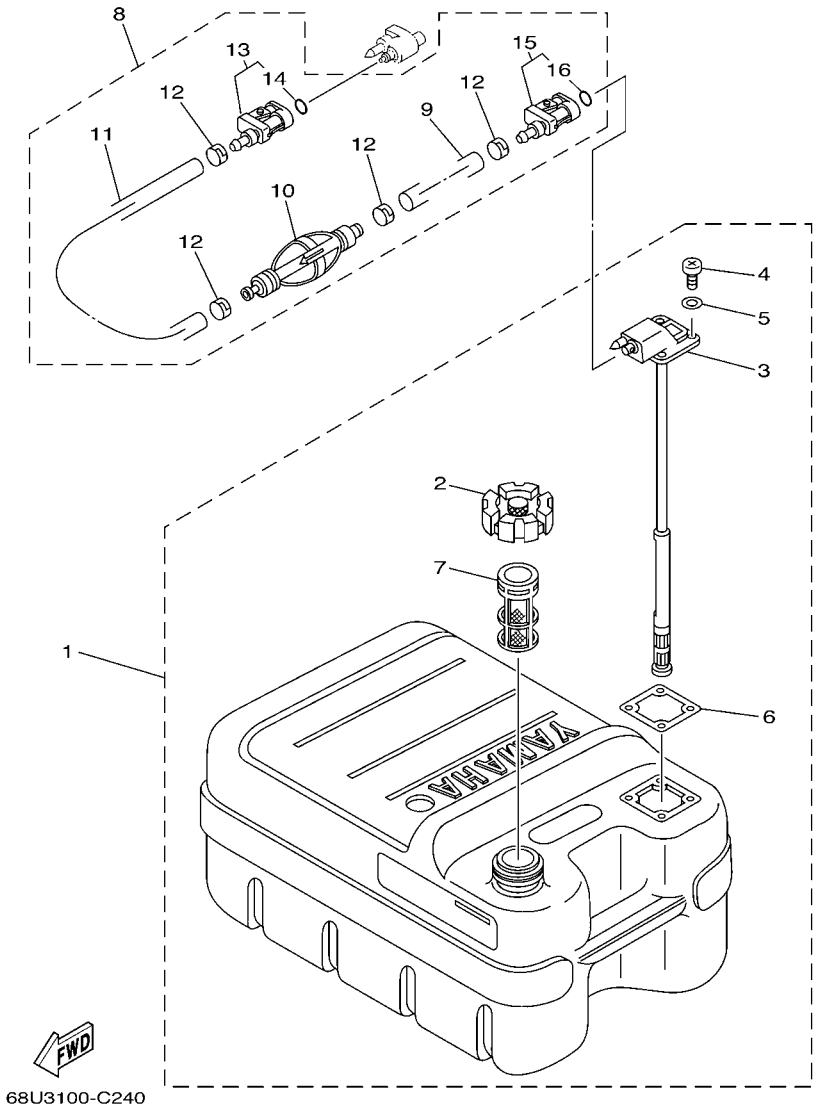

FIG. 19 FUEL TANK — DEPOSITO DE COMBUSTIBLE

REF. NO.	PART NO. CODIGO Nº	DESCRIPTION DESCRIPCION	6B3D	6B4D				REMARKS OBSERVACIONES
1	6YJ–24201–00	FUEL TANK ASSY (24L) TANQUE DEL COMBUSTIBLE (24L)	1	1				AP AP
2	6YJ–24610–01	.CAP ASSY .TAPA COMPLETA	1	1				
3	6YJ–24260–00	.FUEL METER ASSY .MEDIDOR DE COMBUSTIBLE COMPL.	1	1				
4	90157–05M19	.SCREW, PAN HEAD .TORNILLO CABEZA CONICA PLANA	4	4				
5	6Y1–24329–00	.SEAL .SELLO	4	4				
6	6Y1–24268–00	.GASKET, FUEL METER .EMPAQ MEDIDOR DE COMBUSTIBLE	1	1				
7	6YJ–24167–00	.STRAINER .COLADOR	1	1				
8	61J–24306–04	FUEL PIPE COMP. 1 TUBO COMBUST. COMPL 1	1	1				AP AP
9	90445–11M06	.HOSE (L2050) .MANGUERA (L2050)	1	1				
10	61J–24360–00	.PRIMER PUMP ASSY .SOPORTE BOMBA	1	1				
11	90445–11M05	.HOSE (L850) .MANGUERA (L850)	1	1				
12	650–24351–51	.BAND 1 .ABRAZADERA 1	4	4				
13	6G1–24305–05	.FUEL PIPE JOINT COMP. 2 .CONECTOR MANGUERA COMBUST. 2	1	1				
14	93210–08287	..O-RING ..ANILLO O	1	1				
15	6Y1–24305–06	.FUEL PIPE JOINT COMP. 2 .CONECTOR MANGUERA COMBUST. 2	1	1				
16	93210–08287	..O-RING ..ANILLO O	1	1				

FIG. 20 OPTIONAL PARTS PARTES OPCIONALES

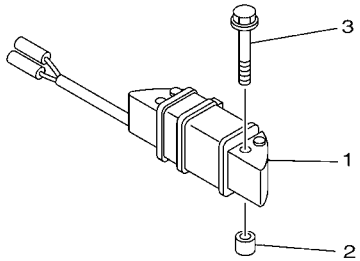

6B39200-L190

REF. NO.	PART NO. CODIGO Nº	DESCRIPTION DESCRIPCION	6B3D	6B4D				REMARKS OBSERVACIONES
1	63V–85533–00	COIL, LIGHTING BOBINA DE LUZ	1	1				
2	90387–06M24	COLLAR ESPACIADOR	2	2				
3	90119–06M40	BOLT, WITH WASHER TORNILLO CON ARANDELA	2	2				

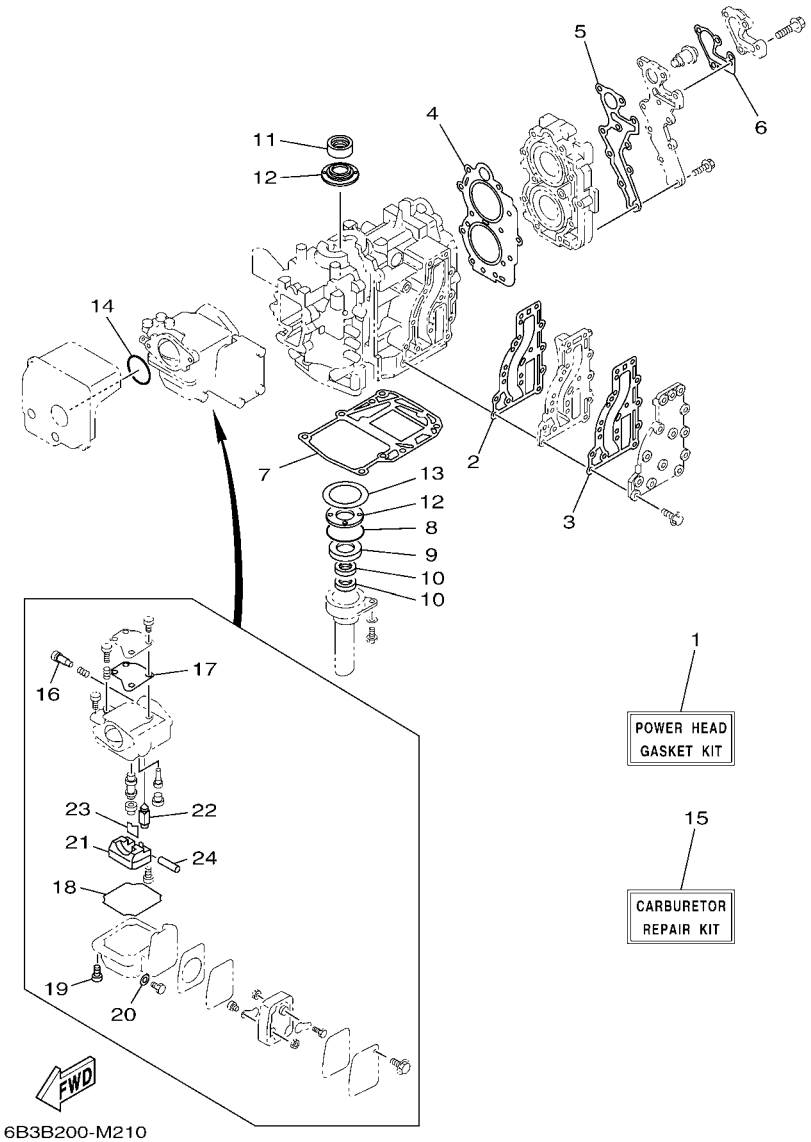

FIG. 21 REPAIR KIT 1 — ESTUCHE REPARATION 1

REF. NO.	PART NO. CODIGO Nº	DESCRIPTION DESCRIPCION	6B3D	6B4D				REMARKS OBSERVACIONES
1	6B4–W0001–00	POWER HEAD GASKET KIT JUEGO DE EMPAQUE DE MOTOR	1	1				
2	6B4–41112–A0	.GASKET, EXHAUST INNER COVER .EMPAQUE	1	1				
3	63V–41112–A0	.GASKET, EXHAUST INNER COVER .EMPAQUE	1	1				
4	63V–11181–A2	.GASKET, CYLINDER HEAD 1 .JUNTA, DE CULATA 1	1	1				
5	6B4–11193–A1	.GASKET, HEAD COVER 1 .EMPAQUE	1	1				
6	682–12414–A1	.GASKET, COVER .EMPAQUE	1	1				
7	6B4–11351–A1	.GASKET, CYLINDER .JUNTA, DE CILINDRO	1	1				
8	93210–46M16	.O-RING .ANILLO O	1	1				
9	93102–25010	.OIL SEAL .SELLO ACEITE	1	1				
10	93101–13M27	.OIL SEAL .SELLO ACEITE	2	2				
11	93110–23M00	.OIL SEAL .SELLO ACEITE	1	1				
12	63V–11445–00	.SPACER .ESPACIADOR	2	2				
13	90201–46M29	.WASHER, PLATE .ARANDELA PLANA	1	1				
14	93210–35M86	.O-RING .ANILLO O	1	1				
15	63V–W0093–01	CARBURETOR REPAIR KIT KIT REPARACION CARBURADOR	1	1				
16	679–14923–00	.SCREW, PILOT .TORNILLO DE AJUSTE	1	1				
17	63V–14126–00	.GASKET .EMPAQUE	1	1				
18	63V–14984–00	.GASKET, FLOAT CHAMBER .EMPAQUE CAMARA DE BOIA	1	1				
19	97980–04114	.SCREW, WITH WASHER .TORNILLO, CON ARANDELA	4	4				
20	65W–14398–00	.GASKET .EMPAQUE	1	1				
21	63V–14985–00	.FLOAT .BOIA	1	1				
22	6AH–14546–00	.VALVE, NEEDLE .VALVULA DE AGUJA	1	1				
23	663–14159–00	.CLIP .PRESILLA	1	1				
24	6H4–14548–00	.PIN, FLOAT ARM .PASADOR DE BRAZO DE BOIA	1	1				

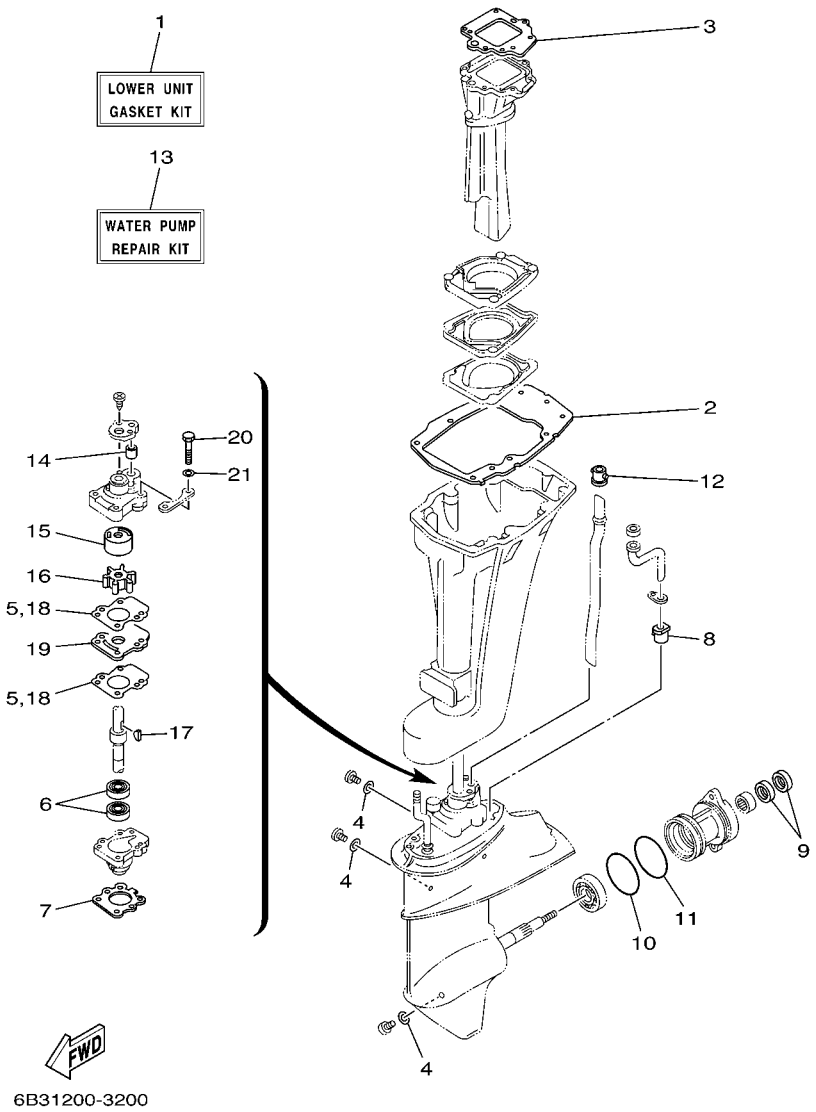

FIG. 22 REPAIR KIT 2 — ESTUCHE REPARATION 2

REF. NO.	PART NO. CODIGO Nº	DESCRIPTION DESCRIPCION	6B3D	6B4D				REMARKS OBSERVACIONES
1	6B4–W0001–20	LOWER UNIT GASKET KIT JUEGO DE EMPAQUE UNIDAD INFER.	1	1				
2	682–45113–A2	.GASKET, UPPER CASING .EMPAQUE	1	1				
3	682–41133–A0	.GASKET, EXHAUST MANIFOLD 1 .EMPAQUE ESCAPE MULTIPLE	1	1				
4	90430–08020	.GASKET .JUNTA	3	3				
5	682–44315–A0	.GASKET, WATER PUMP .EMPAQUE	2	2				
6	93101–20001	.OIL SEAL .SELLO ACEITE	2	2				
7	683–45315–A0	.PACKING, LOWER CASING .EMPAQUE	1	1				
8	6E7–44366–00	.DAMPER, WATER SEAL 2 .GOMA DEL SELLO DE AGUA 2	1	1				
9	93101–17001	.OIL SEAL .SELLO ACEITE	2	2				
10	93210–57M09	.O-RING .ANILLO O	1	1				
11	93210–56M80	.O-RING .ANILLO O	1	1				
12	626–44365–01	.DAMPER, WATER SEAL 1 .HULE DE SELLO DE AGUA 1	1	1				
13	6B4–W0078–0A	WATER PUMP REPAIR KIT ESTUCHE REPARACION BOMBA AGUA	1	1				
14	682–44365–00	.DAMPER, WATER SEAL 1 .HULE DE SELLO DE AGUA 1	1	1				
15	682–44322–41	.INSERT, CARTRIDGE .CARTUCHO	1	1				
16	682–44352–03	.IMPELLER .IMPULSOR	1	1				
17	90280–03005	.KEY, WOODRUFF .CUNA WOODRUFF	1	1				
18	682–44315–A0	.GASKET, WATER PUMP .EMPAQUE	2	2				
19	682–44323–40	.OUTER PLATE, CARTRIDGE .PLACA EXTERIOR DEL CARTUCHO	1	1				
20	97095–06045	.BOLT .PERNO	4	4				
21	92995–06600	.WASHER .ARANDELA	4	4				

NUMERICAL INDEX
INDICE NUMERICO

PART NO. CODIGO Nº	REF. NO.
6B4–11111–00–1S	3 – 18
63V–11181–A2	3 – 19
	21 – 4
6B4–11191–00–1S	3 – 21
6B4–11193–A1	3 – 22
	21 – 5
682–11325–00	1 – 1
	3 – 7
6B4–11351–A1	3 – 29
	21 – 7
676–11372–00	3 – 15
6B4–11400–00	4 – 7
63V–11412–00	4 – 8
63V–11422–00	4 – 9
63V–11432–00	4 – 10
63V–11442–00	4 – 11
63V–11445–00	4 – 28
	21 – 12
63V–11515–02	4 – 14
682–11610–01	4 – 22
682–11610–11	4 – 22
682–11610–21	4 – 22
6E7–11631–00–97	4 – 21
634–11633–00	4 – 23
6E7–11635–00	4 – 21
6E7–11636–00	4 – 21
6K4–11651–00	4 – 16
682–11681–00	4 – 15
6E5–12411–30	1 – 2
	3 – 25
688–12412–00	3 – 26
682–12413–00–1S	3 – 24
682–12414–A1	1 – 3
	3 – 27
	21 – 6
63W–13610–00	5 – 1
63V–13610–10	5 – 1
63V–14126–00	6 – 5
	21 – 17
663–14159–00	6 – 20
	21 – 23
6B3–14301–00	6 – 1
6B4–14301–00	6 – 1
65W–14398–00	6 – 16
	21 – 20
6B4–14440–00	5 – 5
624–14485–00	3 – 3
650–14485–03	3 – 4

PART NO. CODIGO Nº	REF. NO.
63V–14497–02	13 – 1
63V–14523–00	6 – 9
63V–14527–00	6 – 4
6AH–14546–00	6 – 19
	21 – 22
6H4–14548–00	6 – 21
	21 – 24
697–14555–00	6 – 3
679–14923–00	6 – 2
	21 – 16
676–14943–29	6 – 14
676–14943–79	6 – 14
63V–14947–00	6 – 13
6B3–14947–00	6 – 13
63V–14948–06	6 – 7
679–14966–00	6 – 8
63V–14980–00	6 – 12
63V–14984–00	6 – 11
	21 – 18
63V–14985–00	6 – 18
	21 – 21
65W–14992–00	6 – 17
6B4–15100–00	3 – 2
6B4–15396–00–CA	4 – 1
6B4–15663–00	8 – 30
63V–15705–10	8 – 9
6B4–15710–10	8 – 1
6B4–15711–10	8 – 2
63V–15713–00	8 – 7
63V–15714–00	8 – 5
63V–15716–10	8 – 8
63V–15726–00	8 – 19
63V–15734–00	8 – 17
63V–15741–00	8 – 6
63V–15744–00	8 – 12
6B4–15746–00	13 – 23
6L2–15747–00	13 – 28
63V–15748–00	8 – 16
6G1–15755–00	8 – 20
6B4–15758–A0	8 – 22
6B4–15761–00	2 – 10
6B4–15762–00	8 – 23
63V–15764–00	8 – 3
68T–15764–00	8 – 4
63V–15767–01	8 – 10
6B4–15770–00	13 – 30
6G1–15779–00	8 – 21
68T–15784–00	8 – 11

PART NO. CODIGO Nº	REF. NO.
6A0–15789–00	8 – 29
68T–15793–00	8 – 13
63V–15794–00	8 – 15
6YJ–24167–00	19 – 7
6YJ–24201–00	19 – 1
6YJ–24260–00	19 – 3
6Y1–24268–00	19 – 6
6G1–24304–02	7 – 1
6G1–24305–05	19 – 13
6Y1–24305–06	19 – 15
61J–24306–04	19 – 8
6J8–24311–00	8 – 28
6B4–24329–00	7 – 14
6Y1–24329–00	19 – 5
650–24351–51	19 – 12
61J–24360–00	19 – 10
6E0–24378–00	16 – 27
63V–24411–00	6 – 27
6G1–24411–00	6 – 29
6G1–24412–01	6 – 28
6L5–24421–00	6 – 31
6G1–24431–01	6 – 30
6G1–24452–00	6 – 26
61N–24521–00	7 – 6
61N–24560–00	7 – 4
61N–24563–00	1 – 5
	7 – 5
648–24566–02	7 – 12
6YJ–24610–01	19 – 2
6B4–26301–00	12 – 23
61N–26326–00	11 – 2
63V–41111–00–1S	3 – 11
63V–41112–A0	3 – 13
	21 – 3
6B4–41112–A0	3 – 12
	21 – 2
63V–41113–00–1S	3 – 14
682–41116–00–CA	16 – 14
6B4–41116–A0–CA	16 – 14
6B4–41131–00–CA	16 – 8
6B4–41131–10–CA	16 – 8
6B4–41131–20–CA	16 – 8
682–41133–A0	16 – 9
	22 – 3
6B4–41137–A0–CA	16 – 1
6B4–41137–B0–CA	16 – 1
63V–41211–00	13 – 8
6B4–41252–00	5 – 14

PART NO. CODIGO Nº	REF. NO.
6B4–41262–00	5 – 13
6J8–41262–00	13 – 9
	13 – 29
6B4–41271–01	5 – 10
6B4–41273–00	5 – 11
6B4–41274–00	5 – 12
6B4–41283–00	13 – 6
6B4–41638–00	13 – 10
6B4–41662–00	13 – 21
6B4–42111–00–4D	12 – 1
6B4–42119–00	12 – 15
6B4–42125–00	12 – 11
6B4–42126–00	12 – 12
6B4–42131–00–4D	12 – 6
6F5–42137–20	12 – 16
6B4–42138–00	12 – 22
6G1–42177–00	12 – 17
6B4–42511–00–4D	15 – 2
682–42521–00	15 – 6
648–42528–00	15 – 1
682–42537–00	15 – 8
6B3–42610–20	2 – 1
6B4–42610–40	2 – 1
6B4–42610–50	2 – 1
6B4–42613–10	2 – 8
6B4–42615–00	2 – 3
6B4–4261A–00	2 – 2
6B4–4261A–10	2 – 2
6B4–42646–00	2 – 11
6B4–42647–00	2 – 6
6B4–42651–00	2 – 4
677–42675–10	2 – 12
677–42676–10	2 – 13
63V–42678–40	2 – 14
	2 – 15
63W–42678–40	2 – 14
	2 – 15
6E0–42681–40	2 – 16
	2 – 17
6B4–42711–00–4D	11 – 1
6B4–42716–00	11 – 12
6B4–42727–00	11 – 3
6EE–42794–40	11 – 20
6B4–42815–00–4D	11 – 4
6B4–42816–00	11 – 5
682–43111–05–4D	14 – 1
682–43112–05–4D	14 – 2
6B4–43113–00	14 – 12

PART NO. CODIGO Nº	REF. NO.
648–43114–01	14 – 8
6E7–43116–00	14 – 7
663–43118–01–4D	14 – 5
66T–43144–00	11 – 14
689–43160–00	14 – 18
689–43165–00	14 – 19
6B4–43181–00	14 – 43
682–43311–07–4D	14 – 22
682–43318–01	14 – 52
	14 – 54
676–43373–00	14 – 26
682–43611–01	14 – 37
682–43614–01	14 – 35
682–43615–02	14 – 36
682–43616–00	14 – 30
682–43617–00	14 – 34
6B4–43627–00	14 – 44
6B4–43631–00	14 – 28
682–43641–01	14 – 31
682–43643–00	14 – 55
682–43659–01	14 – 39
6B4–43681–10	14 – 53
6B4–44111–01–4D	13 – 11
6B4–44116–00	13 – 16
6B4–44121–00	13 – 12
6B4–44125–00	13 – 14
6B4–44143–00	13 – 18
61N–44146–00	13 – 20
6B4–44147–00	17 – 4
6B4–44150–00	17 – 3
6B4–44150–10	17 – 3
6B4–44150–30	17 – 3
682–44176–00	17 – 5
682–44300–40	17 – 18
682–44312–00	17 – 19
682–44315–A0	17 – 25
	22 – 5
	22 – 18
682–44322–41	17 – 22
	22 – 15
682–44323–40	17 – 26
	22 – 19
682–44328–00	17 – 29
682–44352–03	17 – 23
	22 – 16
682–44361–01	18 – 2
6B4–44361–10	18 – 2
6B4–44361–30	18 – 2

PART NO. CODIGO Nº	REF. NO.
683–44362–01	17 – 35
682–44365–00	17 – 21
	22 – 14
626–44365–01	18 – 1
	22 – 12
683–44365–01	17 – 36
6E7–44366–00	17 – 39
	22 – 8
683–44373–00	17 – 37
6BL–44391–00	11 – 13
682–44514–01–CA	15 – 12
682–44514–31–CA	15 – 12
682–44521–01	15 – 22
682–44522–01	15 – 20
682–44532–00	16 – 20
682–44551–02–4D	15 – 23
682–44552–02–4D	15 – 24
682–44555–30	15 – 29
6B4–44555–30	15 – 29
682–44557–00	15 – 28
682–45111–05–4D	16 – 6
682–45111–15–4D	16 – 6
6B4–45113–00	16 – 3
682–45113–A2	16 – 3
	22 – 2
682–45126–01–CA	16 – 12
682–45127–00	16 – 13
6B4–45135–00	16 – 24
6B4–45151–00–4D	15 – 30
682–45211–31–4D	16 – 21
6E7–45214–00	18 – 5
6B4–45251–00	1 – 8
	18 – 7
6B4–45300–01–4D	17 – 1
6B4–45300–11–4D	17 – 1
6B4–45300–31–4D	17 – 1
6E8–45311–01–4D	17 – 2
683–45315–A0	17 – 33
	22 – 7
626–45316–09	17 – 31
6B4–45318–00	16 – 18
6E7–45331–00–CA	17 – 30
682–45344–00	17 – 27
6B4–45361–00–4D	17 – 53
683–45361–02–4D	17 – 53
682–45375–01	18 – 10
682–45376–01	17 – 17
6B4–45501–00	17 – 40

NUMERICAL INDEX
INDICE NUMERICO

PART NO. CODIGO Nº	REF. NO.
6B4–45501–10	17 – 40
6B4–45501–30	17 – 40
6E7–45536–00	17 – 8
63V–45551–00	17 – 41
6E7–45560–01	17 – 43
664–45567–01	17 – 13
664–45567–10	17 – 13
664–45567–20	17 – 13
664–45567–30	17 – 13
664–45567–40	17 – 13
664–45567–50	17 – 13
664–45567–60	17 – 13
6E7–45571–00	17 – 44
626–45577–00	17 – 45
626–45577–10	17 – 45
626–45577–20	17 – 45
626–45577–30	17 – 45
626–45577–40	17 – 45
6E8–45587–10	17 – 10
6E8–45587–30	17 – 10
683–45611–00	17 – 47
682–45631–00	17 – 49
648–45633–00	17 – 51
650–45635–00	17 – 48
683–45941–00	18 – 15
683–45943–00	18 – 15
63V–45943–10	18 – 15
63V–45945–10	18 – 15
63V–45947–00	18 – 15
683–45947–00	18 – 15
683–45949–00	18 – 15
683–45952–00	18 – 15
63V–45952–10	18 – 15
6E7–45986–00	18 – 17
6E7–45987–01	18 – 11
6EE–81994–40	8 – 32
6EE–81995–40	8 – 31
703–82119–00	9 – 12
6E7–82127–00	16 – 17
6E5–82148–00	14 – 3
6B4–82316–00	10 – 15
62E–8231X–00	10 – 6
6E3–82370–21	10 – 9
62E–82371–11	10 – 5
682–82556–00	11 – 18
689–82575–04	11 – 17
689–8257Y–00	11 – 19
6N7–83557–00	10 – 21

PART NO. CODIGO Nº	REF. NO.
6B4–85520–00	9 – 3
6B4–85530–00	10 – 3
63V–85533–00	9 – 4
	20 – 1
6B4–85540–03	10 – 1
6B4–85550–01	9 – 1
6B4–85550–10	9 – 1
6B4–85570–00	10 – 3
	10 – 4
6B4–85580–00	9 – 2
6B4–W0001–00	21 – 1
6B4–W0001–20	22 – 1
682–W0004–00	5 – 2
6B4–W0078–0A	1 – 9
	22 – 13
6B4–W0090–00–1S	3 – 1
63V–W0093–01	21 – 15
656–W2810–02	7 – 15
683–W4591–02	18 – 16
683–W4592–02	18 – 16
90101–06M29	14 – 15
90101–08M30	15 – 15
90101–12013	14 – 9
90102–08M01	14 – 58
90105–06M01	16 – 15
90105–07M05	3 – 20
90109–06M05	14 – 42
90109–06M80	11 – 15
	13 – 17
90109–06M81	13 – 22
90116–08013	15 – 31
90119–06023	3 – 23
90119–06M40	9 – 11
	20 – 3
90119–06M82	8 – 27
90119–06M83	10 – 2
90119–06MA3	3 – 28
90119–06MA4	3 – 17
	16 – 4
90119–08M07	3 – 10
90119–08M45	15 – 25
90152–05011	12 – 18
90157–05M19	19 – 4
90157–06M06	16 – 16
90159–05007	5 – 8
90167–05017	2 – 9
90170–08009	15 – 32
90170–12066	9 – 14

PART NO. CODIGO Nº	REF. NO.
90171–08M00	14 – 60
90171–10M01	18 – 13
90171–10M07	18 – 18
90173–06009	8 – 26
90179–08M06	17 – 42
90185–08057	15 – 19
90201–08M12	15 – 16
90201–08M13	15 – 17
90201–10M01	18 – 12
90201–10M02	12 – 19
	18 – 19
90201–12018	14 – 10
90201–12472	9 – 15
90201–14377	4 – 25
90201–15017	17 – 11
90201–17682	17 – 46
90201–28013	12 – 4
90201–46M29	4 – 29
	21 – 13
90202–10M56	14 – 50
90202–13M02	15 – 18
90206–10M24	14 – 49
90206–12052	11 – 8
90206–28001	12 – 5
90209–14011	17 – 9
90209–20M23	4 – 18
90209–52M01	15 – 7
90243–04007	14 – 6
90249–06M23	14 – 32
90249–10003	14 – 45
90250–05010	17 – 50
90266–04005	2 – 7
90266–04M00	2 – 5
90280–03005	17 – 24
	22 – 17
90280–05013	9 – 13
90340–08002	17 – 14
90381–12001	14 – 11
90381–20001	12 – 3
90381–35001	12 – 2
90386–08032	12 – 21
90386–12M45	11 – 6
90386–12MA2	11 – 7
90386–40M08	15 – 11
90386–40M09	15 – 9
90387–06M06	13 – 24
90387–06M13	14 – 14
90387–06M20	14 – 38

PART NO. CODIGO Nº	REF. NO.
90387–06M24	9 – 10
	20 – 2
90387–06M50	13 – 2
90430–08020	1 – 7
	17 – 15
	22 – 4
90445–07022	16 – 25
90445–07M08	3 – 5
90445–07MA6	16 – 26
90445–09104	3 – 16
	7 – 9
90445–09M00	7 – 10
90445–11M05	19 – 11
90445–11M06	19 – 9
90464–08M02	10 – 14
90465–06M90	9 – 7
	10 – 13
90465–08M99	10 – 18
90465–11M10	10 – 7
90465–11M52	15 – 21
90465–13M36	16 – 29
90467–06016	3 – 6
	16 – 28
90467–08004	7 – 11
90480–25161	10 – 8
	10 – 10
90501–10326	6 – 10
90501–14M06	17 – 52
90501–18M00	14 – 24
90501–23215	12 – 20
90502–10M07	14 – 21
90506–12002	14 – 46
90506–18009	11 – 16
90506–26M01	14 – 41
90506–26M07	14 – 41
90508–08M39	13 – 25
90508–14018	14 – 29
90508–20M38	13 – 7
91490–16010	12 – 14
91490–16018	8 – 18
91490–20015	14 – 59
91490–30020	18 – 14
91609–20008	4 – 19
91690–20010	5 – 15
91690–30008	14 – 20
92990–06300	18 – 9
92990–06600	14 – 48
	14 – 57

PART NO. CODIGO Nº	REF. NO.
92990–08600	14 – 25
	14 – 61
	15 – 35
92995–06600	4 – 6
	5 – 4
	5 – 7
	7 – 3
	8 – 25
	9 – 6
	9 – 9
	10 – 12
	10 – 17
	10 – 20
	11 – 11
	13 – 5
	13 – 27
	14 – 16
	15 – 5
	15 – 14
	16 – 11
	17 – 60
	22 – 21
92995–08100	15 – 34
92995–08600	12 – 8
	12 – 10
93101–13M27	4 – 4
	21 – 10
93101–17001	17 – 56
	22 – 9
93101–20001	17 – 32
	22 – 6
93102–25010	4 – 3
	21 – 9
93110–23M00	4 – 27
	21 – 11
93210–08287	19 – 14
	19 – 16
93210–32738	1 – 6
	7 – 7
93210–35M86	5 – 9
	21 – 14
93210–40M10	15 – 10
93210–46M16	4 – 2
	21 – 8
93210–56M80	17 – 58
	22 – 11
93210–57M09	17 – 57
	22 – 10

PART NO. CODIGO Nº	REF. NO.
93306–00501	17 – 54
93306–205A1	4 – 12
93310–620W5	4 – 17
93315–314V8	17 – 7
93315–317U2	17 – 55
93332–00005	17 – 12
93390–00029	4 – 13
93420–30042	16 – 19
93440–52009	4 – 20
93450–15023	4 – 26
93602–14104	4 – 24
93604–08062	17 – 16
93606–12019	3 – 9
	15 – 3
	16 – 2
	16 – 5
	16 – 22
	17 – 34
	18 – 3
93700–06M03	14 – 23
94702–00160	1 – 4
	3 – 30
94702–00247	1 – 4
	3 – 30
95380–03600	6 – 24
95380–06600	12 – 13
95380–06700	13 – 19
	14 – 17
95380–08600	7 – 8
95380–08700	15 – 27
	15 – 27
95680–06100	14 – 47
95780–12300	14 – 13
95895–06020	18 – 8
95895–06065	13 – 3
97013–06010	7 – 13
97075–08025	14 – 27
97095–06008	14 – 56
97095–06010	10 – 19
	17 – 38
97095–06012	13 – 4
97095–06014	10 – 16
	11 – 9
97095–06016	4 – 5
	9 – 5
	10 – 11
	11 – 10
97095–06020	5 – 3

NUMERICAL INDEX
INDICE NUMERICO

PART NO. CODIGO Nº	REF. NO.
97095–06020	7 – 2
	9 – 8
	13 – 26
	16 – 10
	17 – 59
97095–06025	15 – 4
	15 – 13
97095–06035	8 – 24
97095–06045	22 – 20
97095–06095	5 – 6
97095–08012	15 – 33
97095–08030	12 – 9
97095–08055	12 – 7
97575–08535	16 – 23
	18 – 4
97575–08550	16 – 7
97575–08555	15 – 26
97595–06545	17 – 28
97780–40112	17 – 20
97780–40520	13 – 13
	13 – 15
97780–50110	17 – 6
97803–04010	6 – 6
97880–05012	18 – 6
97885–06008	14 – 4
97980–04114	6 – 15
	21 – 19
97980–04123	6 – 25
98580–04006	6 – 32
98580–04008	6 – 22
98780–05015	3 – 8
98980–03006	6 – 23
99080–05600	14 – 33
	14 – 40
99080–09600	14 – 51