YAMAHA

F75C

SERVICE MANUAL

6BC-28197-5K-11

NOTICE

This manual has been prepared by Yamaha primarily for use by Yamaha dealers and their trained mechanics when performing maintenance procedures and repairs to Yamaha equipment. It has been written to suit the needs of persons who have a basic understanding of the mechanical and electrical concepts and procedures inherent in the work, for without such knowledge attempted repairs or service to the equipment could render it unsafe or unfit for use.

Because Yamaha has a policy of continuously improving its products, models may differ in detail from the descriptions and illustrations given in this publication. Use only the latest edition of this manual. Authorized Yamaha dealers are notified periodically of modifications and significant changes in specifications and procedures, and these are incorporated in successive editions of this manual.

Important information

Particularly important information is distinguished in this manual by the following notations:

⚠ The Safety Alert Symbol means ATTENTION! BECOME ALERT! YOUR SAFETY IS INVOLVED!

⚠WARNING

Failure to follow WARNING instructions could result in severe injury or death to the machine operator, a bystander, or a person inspecting or repairing the outboard motor.

CAUTION:

A CAUTION indicates special precautions that must be taken to avoid damage to the outboard motor.

NOTE:

A NOTE provides key information to make procedures easier or clearer.

F75C
SERVICE MANUAL
©2007 by Yamaha Motor Co., Ltd.
1st Edition, July 2007
All rights reserved.
Any reprinting or unauthorized use without the written permission of Yamaha Motor Co., Ltd. is expressly prohibited.
Printed in Japan

Contents

General information	GEN INFO	1
Specification	SPEC	2
Periodic check and adjustment	CHK ADJ	3
Fuel system	FUEL	4
Power unit	POWR	5
Lower unit	LOWR	6
Bracket unit	BRKT	7
Electrical system	ELEC	8
Troubleshooting	TRBL SHTG	9
Index		

General information

How to use this manual 1-1
Manual format 1-1
Symbol 1-2
Abbreviation 1-3
Sealant and locking agent table 1-4

Safety while working 1-5
Fire prevention 1-5
Ventilation 1-5
Self-protection 1-5
Part, lubricant and sealant 1-5
Good working practice 1-6
Disassembly and assembly 1-6

Identification 1-7
Model 1-7
Serial number 1-7

Special service tool 1-8

Feature and benefit 1-15
ECM 1-15

Propeller selection 1-17
Propeller size 1-17
Selection 1-17

Predelivery check 1-17
Setting the tiller handle (tiller handle model) 1-17
Setting the steering friction plate (tiller handle model) 1-20
Checking the fuel system 1-20
Checking the engine oil level 1-21
Checking the gear oil level 1-21
Setting the battery 1-21
Checking the outboard motor mounting height 1-21
Setting the throttle cable and shift cable 1-22
Checking the gear shift and throttle operation 1-23
Checking the steering operation 1-23
Checking the tilt operation 1-24
Checking the engine start switch and engine stop lanyard switch 1-25
Checking the cooling water pilot hole 1-25
Test run 1-26
Break-in 1-26
After test run 1-26

How to use this manual

Manual format

The format of this manual has been designed to make service procedures clear and easy to understand. Use the information below as a guide for effective and quality service.

- Parts are shown and detailed in an exploded diagram and are listed in the components list (see ① in the figure below for an example page).
- The component list consists of part names and quantities, as well as bolt and screw dimensions (see ② in the figure below).
- Symbols are used to indicate important aspects of a procedure, such as the grade of lubricant and lubrication point (see ③ in the figure below).
- Tightening torque specifications are provided in the exploded diagrams (see ④ in the figure below for an example), and in the related detailed instructions. Some torque specifications are listed in stages as torque figures or angles in degrees.
- Separate procedures and illustrations are used to explain the details of removal, checking and installation where necessary (see ⑤ in the figure below for an example page).

NOTE:

For troubleshooting procedures, see Chapter 9, “Troubleshooting.”

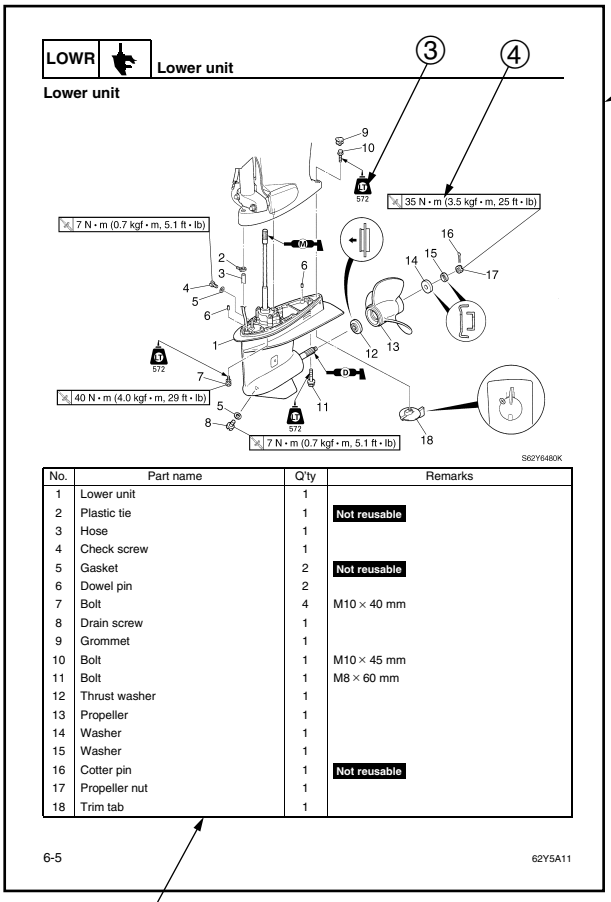

LOWR Lower unit

Lower unit

No.	Part name	Q'ty	Remarks
1	Lower unit	1	
2	Plastic tie	1	Not reusable
3	Hose	1	
4	Check screw	1	
5	Gasket	2	Not reusable
6	Dowel pin	2	
7	Bolt	4	M10 × 40 mm
8	Drain screw	1	
9	Grommet	1	
10	Bolt	1	M10 × 45 mm
11	Bolt	1	M8 × 60 mm
12	Thrust washer	1	
13	Propeller	1	
14	Washer	1	
15	Washer	1	
16	Cotter pin	1	Not reusable
17	Propeller nut	1	
18	Trim tab	1	

6-5 62Y5A11

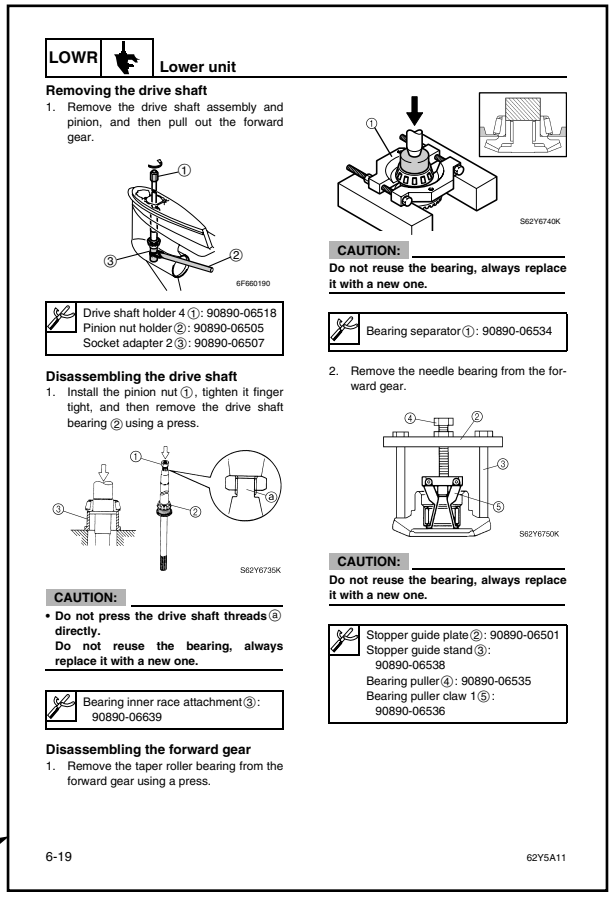

LOWR Lower unit

Removing the drive shaft

1. Remove the drive shaft assembly and pinion, and then pull out the forward gear.

Drive shaft holder 4 ①: 90890-06518
Pinion nut holder ②: 90890-06505
Socket adapter 2 ③: 90890-06507

Disassembling the drive shaft

1. Install the pinion nut ①, tighten it finger tight, and then remove the drive shaft bearing ② using a press.

CAUTION:

- **Do not press the drive shaft threads ⓐ directly.**
  Do not reuse the bearing, always replace it with a new one.

Bearing inner race attachment ③: 90890-06639

Disassembling the forward gear

1. Remove the taper roller bearing from the forward gear using a press.

CAUTION:

Do not reuse the bearing, always replace it with a new one.

Bearing separator ①: 90890-06534

2. Remove the needle bearing from the forward gear.

CAUTION:

Do not reuse the bearing, always replace it with a new one.

Stopper guide plate ②: 90890-06501
Stopper guide stand ③: 90890-06538
Bearing puller ④: 90890-06535
Bearing puller claw 1 ⑤: 90890-06536

6-19 62Y5A11

Symbol

The symbols below are designed to indicate the content of a chapter.

General information

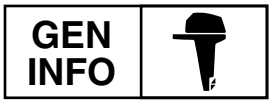

Fuel system

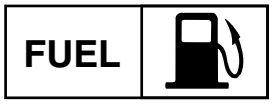

Bracket unit

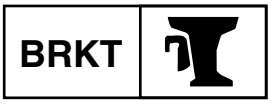

Specification

Power unit

Electrical system

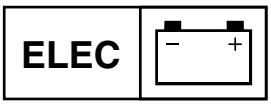

Periodic check and adjustment

Lower unit

Troubleshooting

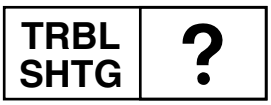

Symbols ① to ⑥ indicate specific data.

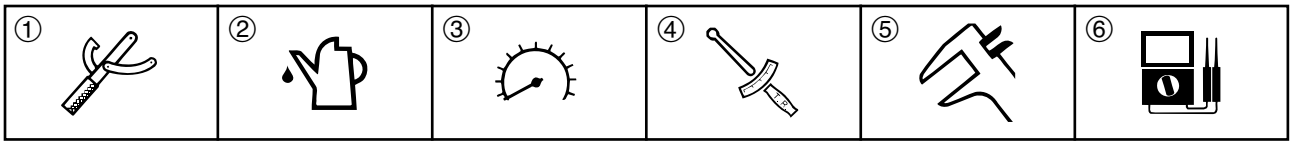

① Special service tool
② Specified oil or fluid
③ Specified engine speed
④ Specified tightening torque
⑤ Specified measurement
⑥ Specified electrical value (resistance, voltage, electric current)

Symbols ⑦ to ⑬ in an exploded diagram or illustration indicate the grade of lubricant and the lubrication point.

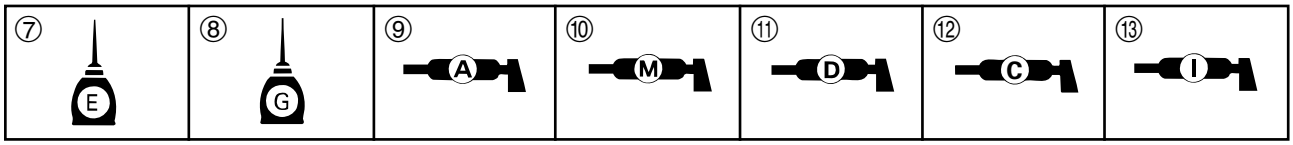

⑦ Apply 4-stroke motor oil
⑧ Apply gear oil
⑨ Apply water resistant grease (Yamaha grease A)
⑩ Apply molybdenum disulfide grease
⑪ Apply corrosion resistant grease (Yamaha grease D)
⑫ Apply low temperature resistant grease (Yamaha grease C)
⑬ Apply injector grease

Symbols ⑭ to ⑲ in an exploded diagram or illustration indicate the type of sealant or locking agent and the application point.

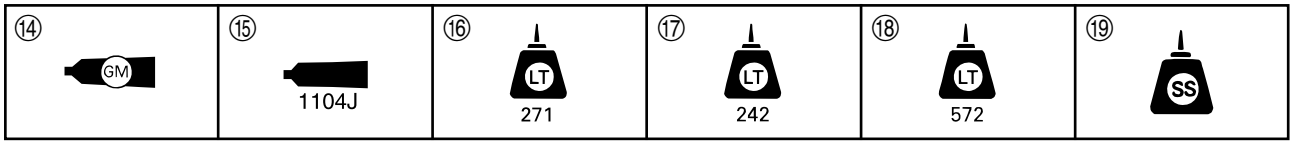

⑭ Apply Gasket Maker
⑮ Apply ThreeBond 1104J
⑯ Apply LOCTITE 271 (red)
⑰ Apply LOCTITE 242 (blue)
⑱ Apply LOCTITE 572
⑲ Apply silicone sealant

Abbreviation

The following abbreviations are used in this service manual.

Abbreviation	Description
AFT	Aft end
API	American Petroleum Institute
BOW	Bow end
CCA	Cold Cranking Ampere
ECM	Electronic Control Module
EN	European Norm (European standard)
EX	Exhaust
F	Forward
IEC	International Electrotechnical Commission
IN	Intake
ISC	Idle Speed Control
LED	Light-Emitting Diode
N	Neutral
PCV	Pressure Control Valve
PORT	Port side
R	Reverse
SAE	Society of Automotive Engineers
STBD	Starboard side
TCI	Transistor Controlled Ignition
TDC	Top Dead Center
TPS	Throttle Position Sensor
UP	Upside
Ver.	Version
WD	Wiring Diagram
YDIS	Yamaha Diagnostic System

Sealant and locking agent table

The following table contains sealants, locking agents and greases used in this service manual that are not listed on page 1-2.

Symbol	Name	Application	Manufacturer
S518	LOCTITE 518	Sealant	Henkel
WR-No.2	WR-No.2	Wear resistant grease	Yamaha
1280B	ThreeBond 1280B	Sealant	ThreeBond
1324	ThreeBond 1324	Sealant	ThreeBond
1386B	ThreeBond 1386B	Sealant	ThreeBond
1401	ThreeBond 1401	Sealant	ThreeBond
1530D	ThreeBond 1530D	Sealant	ThreeBond
1377B	ThreeBond 1377B	Sealant	ThreeBond

Safety while working

To prevent an accident or injury and to ensure quality service, follow the safety procedures provided below.

Fire prevention

Gasoline is highly flammable.
Keep gasoline and all flammable products away from heat, sparks and open flames.

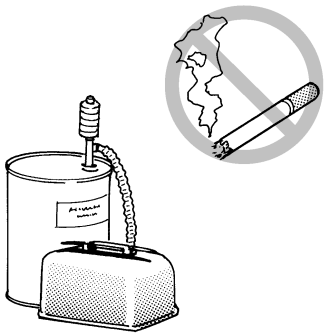
S69J1010

Ventilation

Gasoline vapor and exhaust gas are heavier than air and extremely poisonous. If inhaled in large quantities they may cause loss of consciousness and death within a short time. When test running an engine indoors (e.g., in a water tank) be sure to do so where adequate ventilation can be maintained.

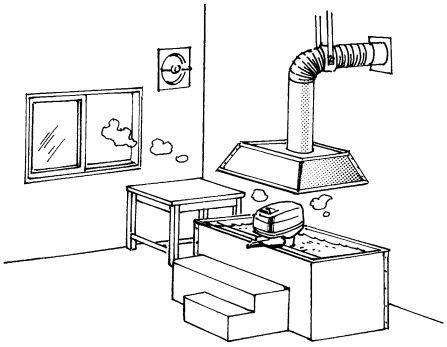
S69J1020

Self-protection

Protect your eyes by wearing safety glasses or safety goggles during all operations involving drilling and grinding, or when using an air compressor.
Protect your hands and feet by wearing protective gloves and safety shoes when necessary.

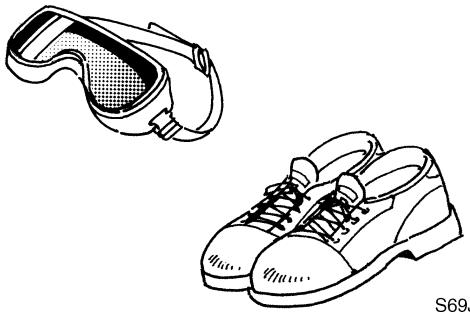
S69J1030

Part, lubricant and sealant

Use only genuine Yamaha parts, lubricants and sealants or those recommended by Yamaha, when servicing or repairing the outboard motor.

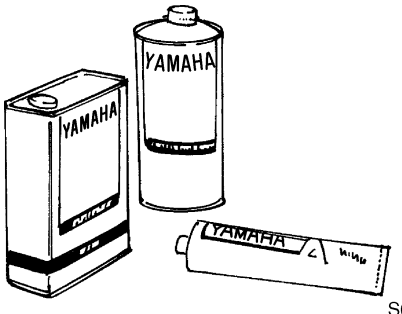

S69J1040

Under normal conditions, the lubricants mentioned in this manual should not harm or be hazardous to your skin. However, you should follow these precautions to minimize any risk when working with lubricants.

1. Avoid contact with skin. Do not, for example, place a soiled rag in your pocket.
2. Wash hands and any other part of the body thoroughly with soap and hot water after contact with a lubricant or lubricant soiled clothing has been made.
3. Change and wash clothing as soon as possible if soiled with lubricants.
4. To protect your skin, apply a protective cream to your hands before working on the outboard motor.
5. Keep a supply of clean, lint-free cloths for wiping up spills, etc.

6. Maintain good standards of personal and industrial hygiene.

Good working practice

Special service tool

Use the recommended special service tools to protect parts from damage. Use the right tool in the right manner–do not improvise.

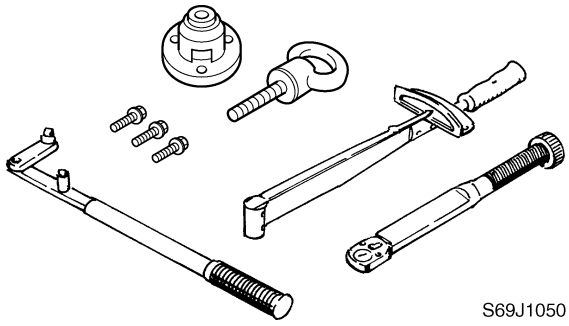

S69J1050

Tightening torque

Follow the tightening torque specifications provided throughout the manual. When tightening nuts, bolts and screws, tighten the large sizes first, and tighten fasteners starting in the center and moving outward.

Non-reusable part

Always use new gaskets, seals, O-rings, cotter pins, circlips, etc., when installing or assembling parts.

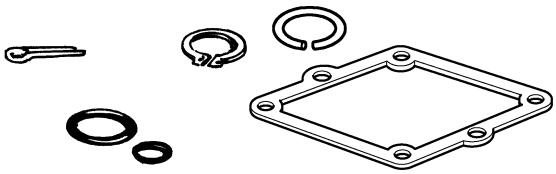

S69J1060

Disassembly and assembly

1. Use compressed air to remove dust and dirt during disassembly.

2. Apply engine oil to the contact surfaces of moving parts before assembly.

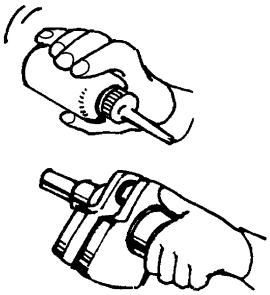

S69J1070

3. Install bearings with the manufacture identification mark in the direction indicated in the installation procedure. In addition, be sure to lubricate the bearings liberally.

4. Apply a thin coat of water-resistant grease to the lip and periphery of an oil seal before installation.

5. Check that moving parts operate normally after assembly.

Identification

Model

This manual covers the following model.

Applicable model
F75CEHD, F75CED

EHD: Electric starter, tiller handle, hydro tilt model.
ED : Electric starter, remote control, hydro tilt model.

Serial number

The outboard motor serial number is stamped on a label attached to the port clamp bracket.

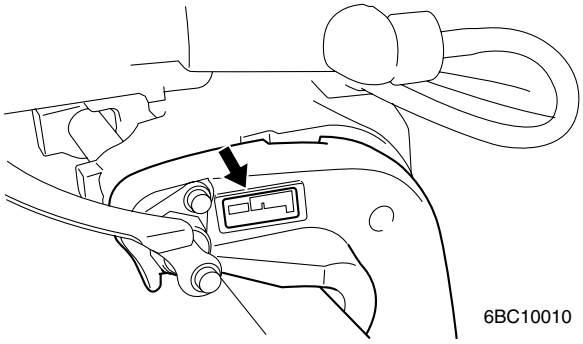

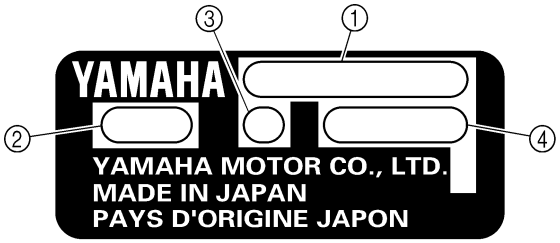

S6AL1D00

① Model name
② Approved model code
③ Transom height
④ Serial number

Model name	Approved model code	Starting serial No.
F75CEHD	6BC	1000001–
F75CED		

Special service tool

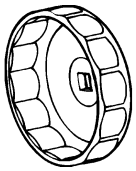

Oil filter wrench
90890-01426

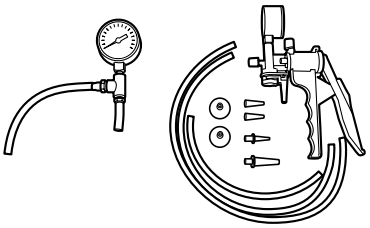

Vacuum/pressure pump gauge set
90890-06756

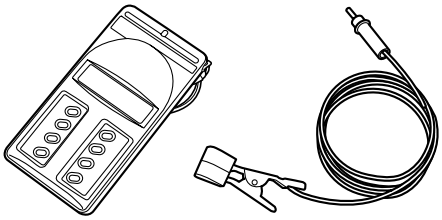

Digital tachometer
90890-06760

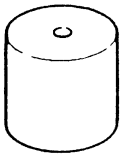

Small end bearing installer
90890-06527

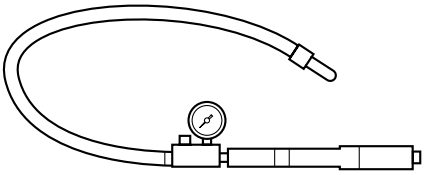

Leakage tester
90890-06840

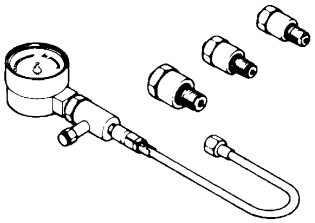

Compression gauge
90890-03160

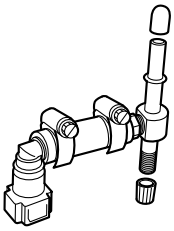

Fuel pressure gauge adapter B
90890-06942

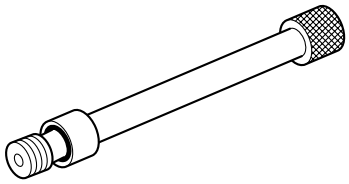

Compression gauge extension M14
90890-06563

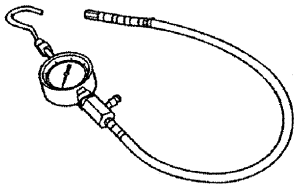

Fuel pressure gauge
90890-06786

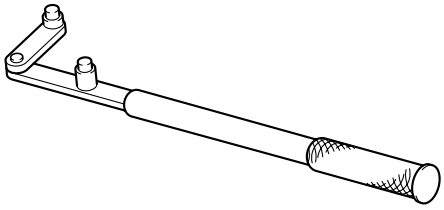

Flywheel holder
90890-06522

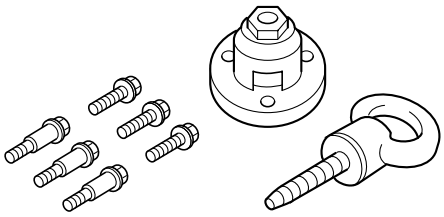

Flywheel puller
90890-06521

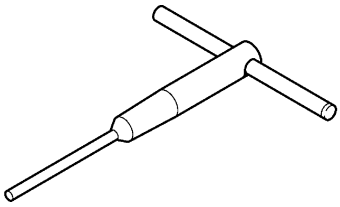

Valve seat cutter holder
90890-06553

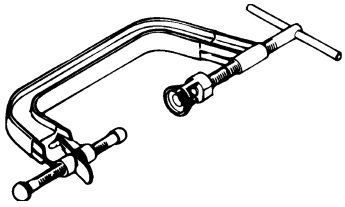

Valve spring compressor
90890-04019

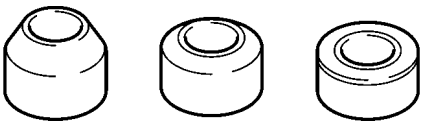

Valve seat cutter
90890-06312, 90890-06315, 90890-06324
90890-06328, 90890-06555, 90890-06818

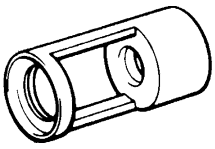

Valve spring compressor attachment
90890-06320

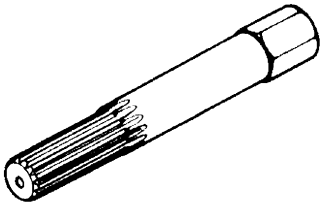

Crankshaft holder 20
90890-06552

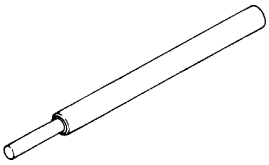

Valve guide remover/installer
90890-04064

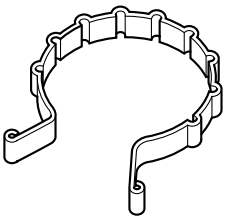

Piston slider
90890-06530

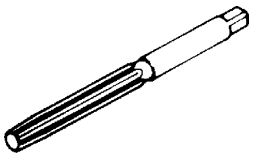

Valve guide reamer
90890-04066

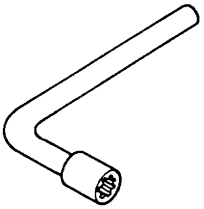

Shift rod push arm
90890-06052

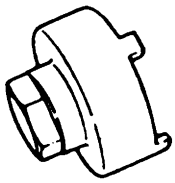

Ring nut wrench 3
90890-06511

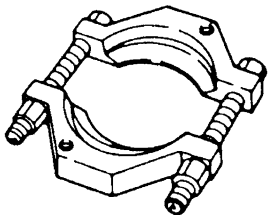

Bearing separator
90890-06534

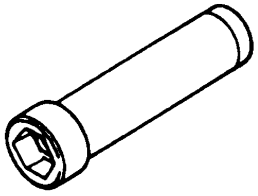

Ring nut wrench extension
90890-06513

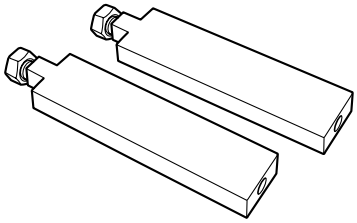

Stopper guide stand
90890-06538

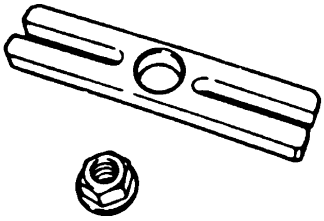

Stopper guide plate
90890-06501

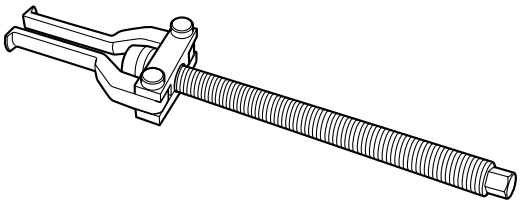

Bearing puller assembly
90890-06535

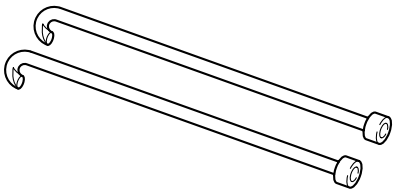

Bearing housing puller claw L
90890-06502

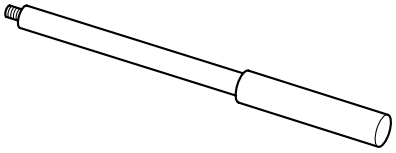

Driver rod L3
90890-06652

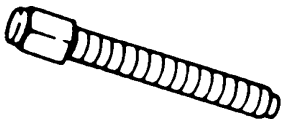

Center bolt
90890-06504

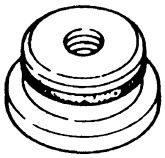

Needle bearing attachment
90890-06609, 90890-06610, 90890-06612
90890-06653, 90890-06654

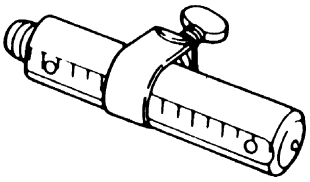

Driver rod SS
90890-06604

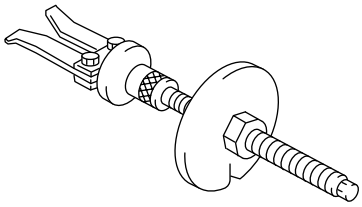

Bearing outer race puller assembly
90890-06523

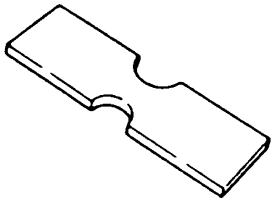

Bearing depth plate
90890-06603

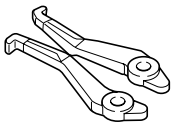

Outer race puller claw A
90890-06532

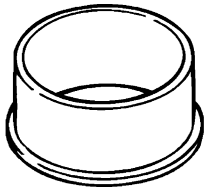

Bearing inner race attachment
90890-06640, 90890-06661

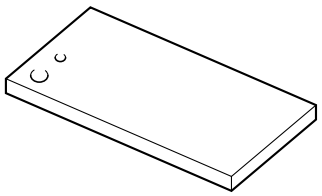

Magnet base plate
90890-07003

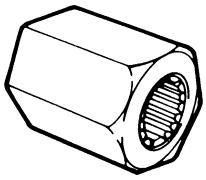

Drive shaft holder 5
90890-06519

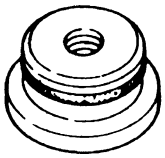

Ball bearing attachment
90890-06633

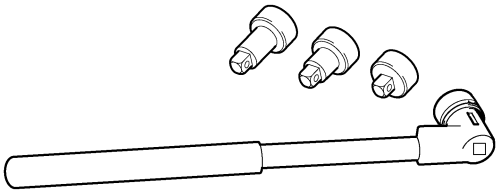

Pinion nut holder
90890-06715

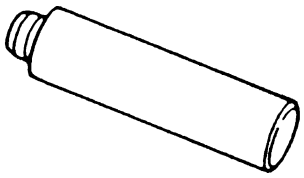

Driver rod LS
90890-06606

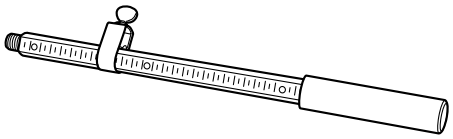

Driver rod SL
90890-06602

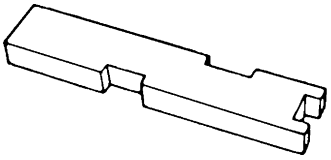

Shimming plate
90890-06701

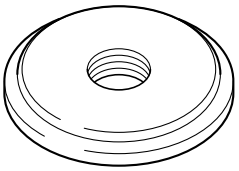

Bearing outer race attachment
90890-06620, 90890-06625, 90890-06628

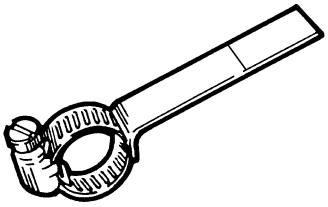

Backlash indicator
90890-06706

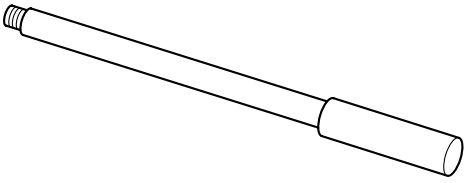

Driver rod LL
90890-06605

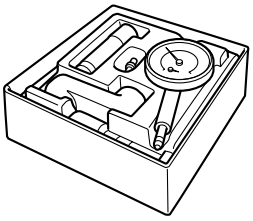

Dial gauge set
90890-01252

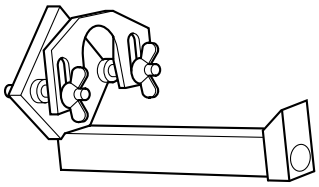

Pinion height gauge
90890-06710

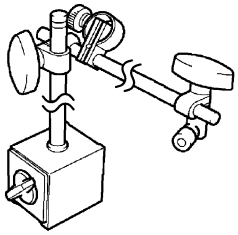

Magnet base B
90890-06844

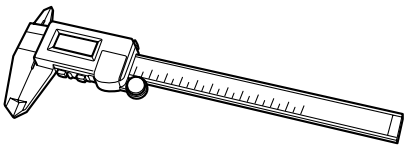

Digital caliper
90890-06704

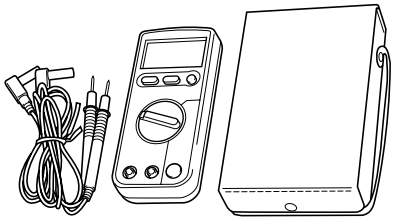

Digital circuit tester
90890-03174

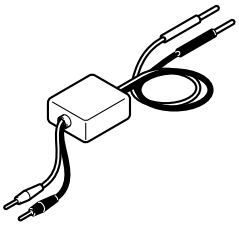

Peak voltage adapter B
90890-03172

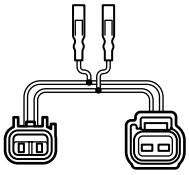

Test harness (2 pins)
90890-06867

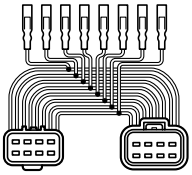

Test harness (8 pins)
90890-06879

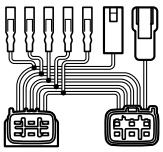

Test harness (6 pins)
90890-06848

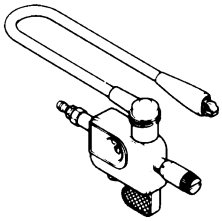

Ignition tester
90890-06754

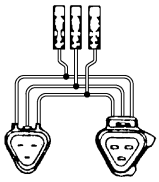

Throttle sensor adjusting lead (3 pins)
90890-06857

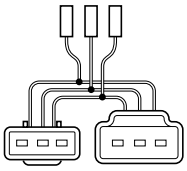

Test harness (3 pins)
90890-06791

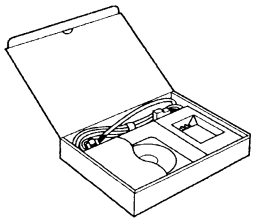

YDIS (connecting kit)
60V-85300-02-00

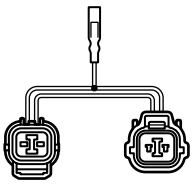

Test harness (2 pins)
90890-06792

YDIS (CD-ROM, Ver. 1.23a)
60V-WS853-03

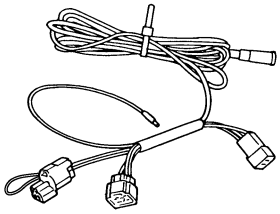

Diagnostic flash indicator B
90890-06865

Feature and benefit

ECM

ECM coupler layout (F75C)

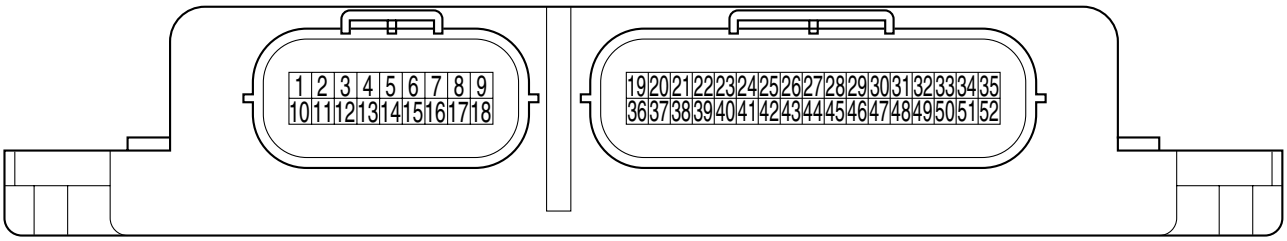

6BC00020

No.	Connecting part	Color code
1	—	—
2	To connected terminal 11	Red/black
3	To connected terminal 5	Light green
4	Pulser coil #1	White/black
5	To connected terminal 3	Light green
6	Sensor assembly (intake temperature sensor)	Black/yellow
7	—	—
8	TPS	Pink
9	To connected terminal 18	Red
10	—	—
11	To connected terminal 2	Red/black
12	To connected terminal 15	Sky blue
13	Pulser coil #2	White/red
14	Cooling water temperature sensor	Black/yellow
15	To connected terminal 12	Sky blue
16	—	—
17	—	—
18	To connected terminal 9	Red
19	Sensor assembly (intake pressure sensor)	Pink/green
20	Sensor power source (5V)	Orange
21	Battery power source (12V)	Red/yellow
22	Unit ground	Black

No.	Connecting part	Color code
23	YDIS	White/black
24	—	—
25	—	—
26	Oil pressure switch	Pink/white
27	Buzzer	Pink
28	Overheat warning indicator	Pink/black
29	Tachometer, hour meter, main/high-pressure fuel pump relay	Green
30	ISC	Green/black
31	ECM ground	Black
32	Fuel injector #2, #3	Purple/black
33	Fuel injector #1, #4	Purple/red
34	—	—
35	Ignition coil #2, #3	Black/white
36	Shift position switch	Blue/green
37	Water detection switch	Blue/white
38	—	—
39	Sensor ground	Black
40	—	—
41	—	—
42	—	—
43	Engine stop lanyard switch	White
44	Low oil pressure warning indicator	Pink/white
45	Diagnostic flash indicator B	Blue/white
46	Main/high-pressure fuel pump relay	Blue
47	ISC	Green/red
48	—	—
49	ISC	Green
50	ISC	Green/yellow
51	—	—
52	Ignition coil #1, #4	Black/red

ECM circuit diagram (F75C)

NOTE

The circled numbers in the illustration indicate the ECM terminal numbers.

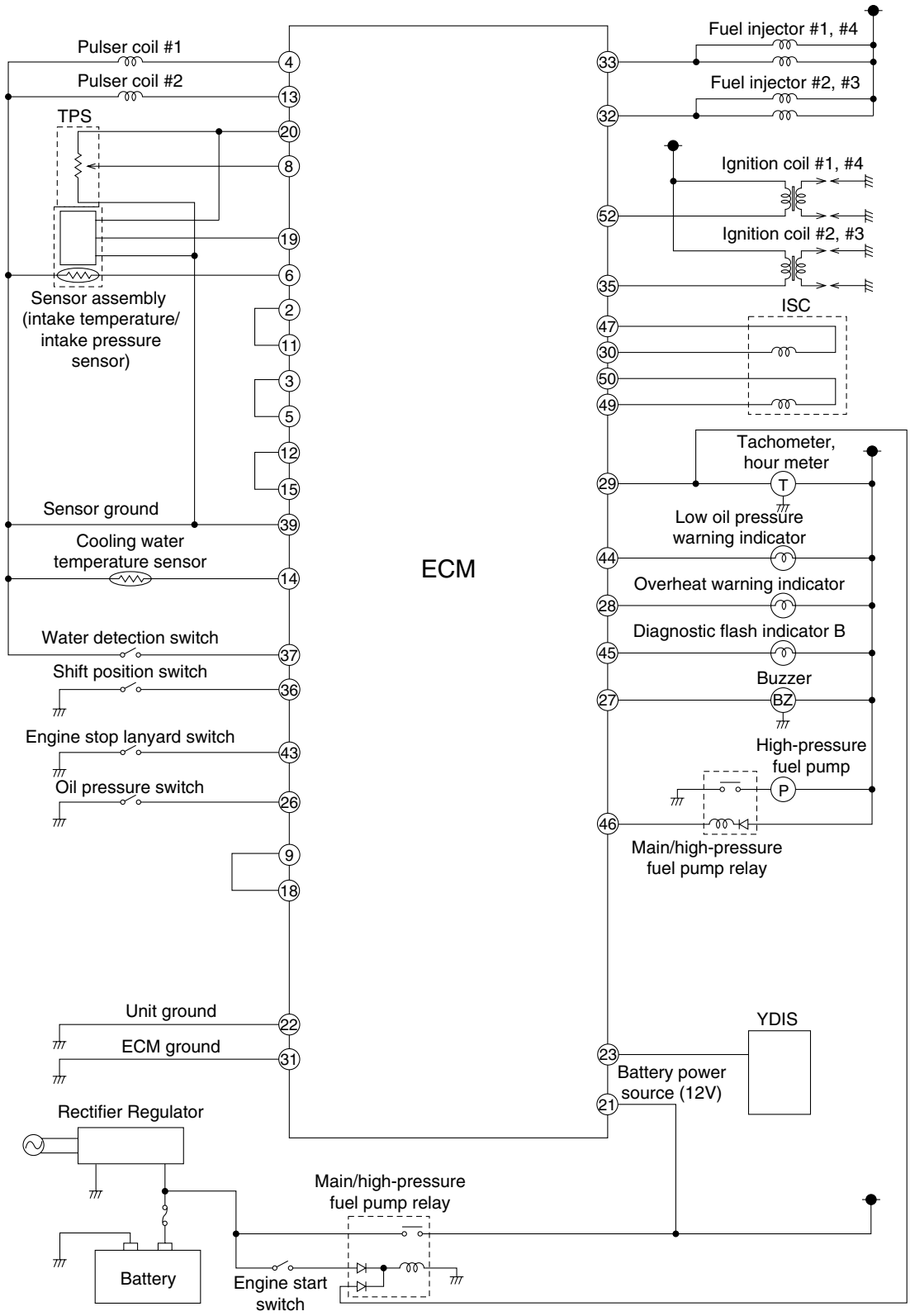

6BC00030

Propeller selection

The performance of a boat and outboard motor will be critically affected by the size and type of propeller you choose. Propellers greatly affect boat speed, acceleration, engine life, fuel economy and even boating and steering capabilities. An incorrect choice could adversely affect performance and could also seriously damage the engine.
Use the following information as a guide for selecting a propeller that meets the operating conditions of the boat and the outboard motor.

Propeller size

The size of the propeller is indicated as shown.

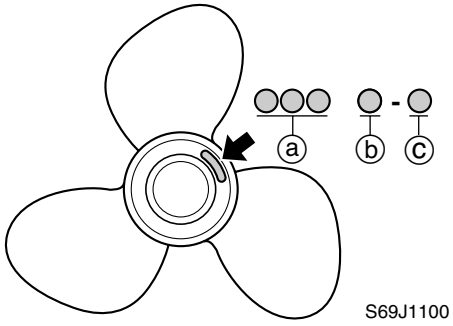

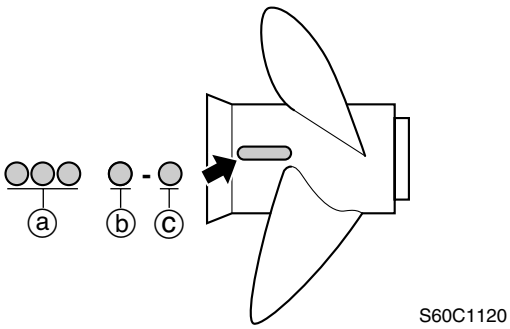

ⓐ Propeller diameter (in inches)
ⓑ Propeller pitch (in inches)
ⓒ Propeller type (propeller mark)

Selection

When the engine speed is at the full throttle operating range (5,000–6,000 r/min), the ideal propeller for the boat is one that provides maximum performance in relation to boat speed and fuel consumption.

Propeller size (in)	Material
12 5/8 × 21 - K	Aluminum
13 × 19 - K	
13 × 23 - K	
13 × 25 - K	
13 1/4 × 17 - K	
13 1/2 × 15 - K	
13 5/8 × 13 - K	
14 × 11 - K	
13 × 17 - K	Stainless steel
13 × 19 - K	
13 × 21 - K	
13 × 23 - K	
13 × 25 - K	
13 1/2 × 14 - K	
13 1/2 × 16 - K	

Predelivery check

To make the delivery process smooth and efficient, the predelivery checks should be completed as explained below.

Setting the tiller handle (tiller handle model)

1. Remove the bolt ①, bolts ②, plate ③, self-locking nuts ④ and steering hook ⑤.

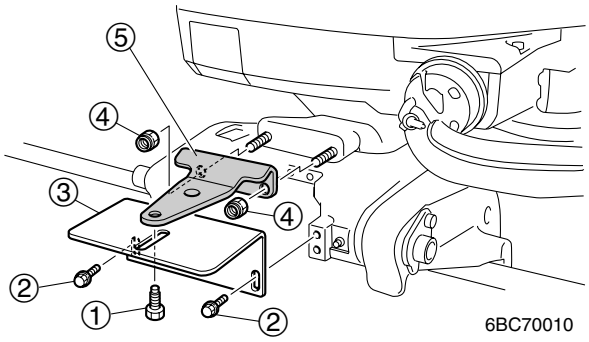

2. Remove the bolts ⑥, retaining plate ⑦, bolt ⑧, grommet holder ⑨ and grommet ⑩.

3. Remove the bolt ⑪ and cable holder ⑫.

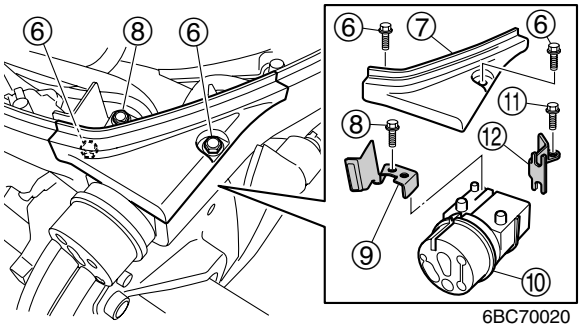

4. Install the bracket ⑬, bracket self-locking nuts ⑭ and stud bolts ⑮ onto the swivel bracket, and then tighten them to the specified torque.

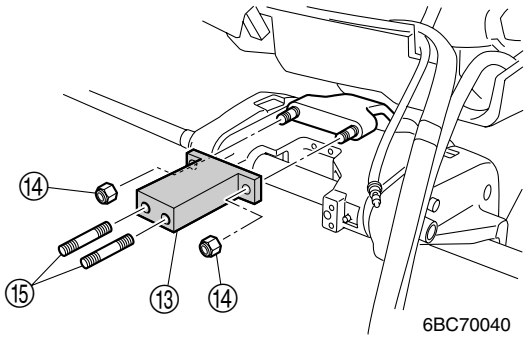

	Bracket self-locking nut ⑭: 37 N·m (3.7 kgf·m, 27.3 ft·lb) Stud bolt ⑮: 48 N·m (4.8 kgf·m, 35.5 ft·lb)

5. Install the hose holder ⑯ and bracket ⑰ onto the tiller handle assembly ⑱, and then affix the protector ⑲ to the tiller handle assembly as shown.

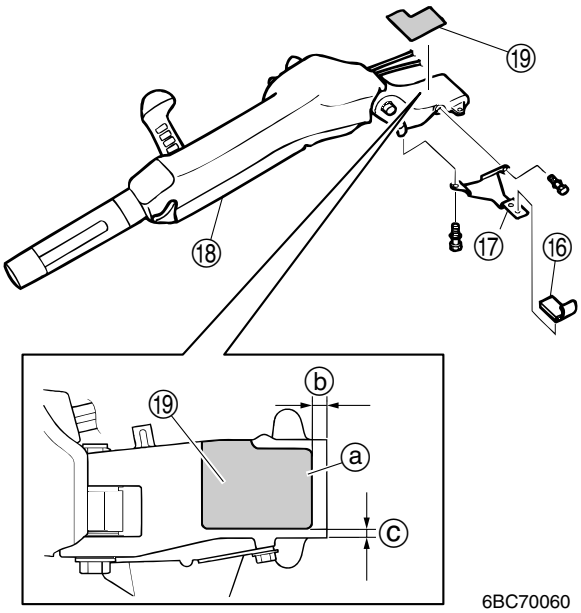

NOTE:

Clean the surface of the section ⓐ of the tiller handle, and then affix the protector ⑲, making sure that no air is trapped under the protector. (ⓑ: 9.0 mm (0.35 in), ⓒ: 6.0 mm (0.24 in)

6. Install the tiller handle assembly ⑱ to the bracket, and then tighten the tiller handle self-locking nuts ⑳ to the specified torque.

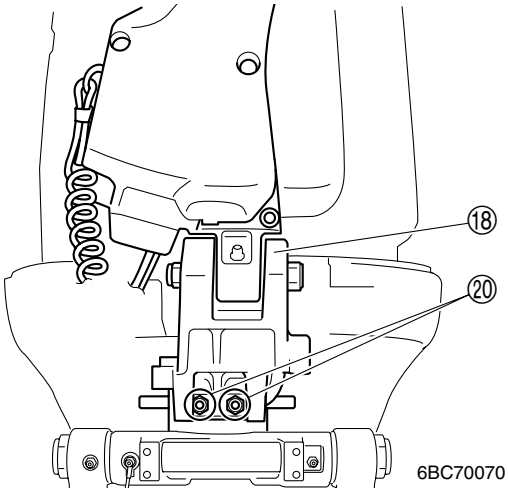

	Tiller handle self-locking nut ⑳: 37 N·m (3.7 kgf·m, 27.3 ft·lb)

7. Connect the warning indicator coupler ㉑, 10-pin main harness coupler ㉒, positive battery cable ㉓ and negative battery cable ㉔, and then fasten the plastic tie ㉕.

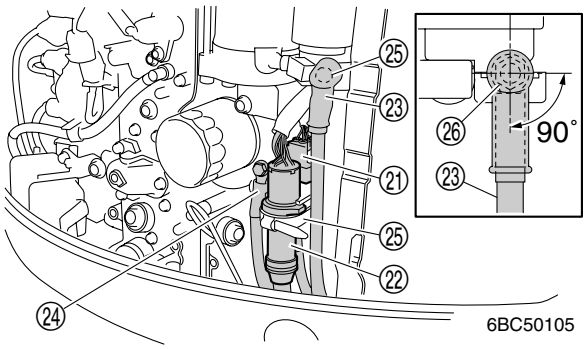

NOTE:
To connect the lead and cables, see "Electrical component and wiring harness routing" (8-3).

Terminal nut ㉖:
9 N·m (0.9 kgf·m, 6.6 ft·lb)

8. Fasten the battery cable ㉗ and 10-pin main harness ㉘ with the plastic tie ㉙, and then route the hoses, leads and cables into the grommet ⑩ as shown.

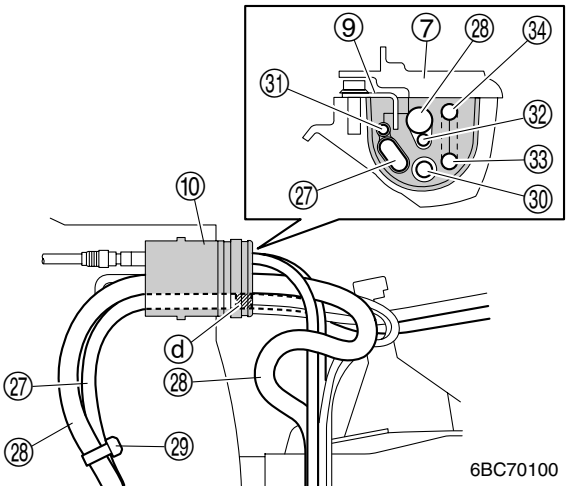

No.	Part name
㉚	Fuel hose
㉘	10-pin main harness
㉝	Shift cable
㉛	Speedometer hose
㉜	Warning indicator lead
㉗	Battery cable
㉞	Throttle cable

NOTE:
- Align the white tape end ⓓ of the battery cable with the end of the grommet.
- To route the hoses, lead and cables into the bottom cowling, see "Electrical component and wiring harness routing" (8-11).

9. Install the cable holder ⑫ and grommet holder ⑨.

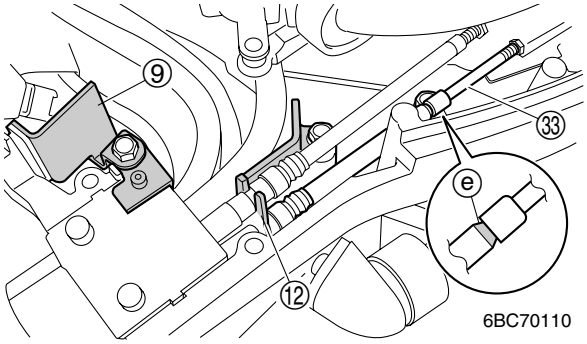

NOTE:
- Install the shift cable ㉝ first, and then install the cable holder ⑫.
- The shift cable ㉝ identification ⓔ is shaped as shown.

10. Install the retaining plate, and then tighten it.

11. Install the corrugate tube ㉟ (85 mm (3.3 in)), and then fasten it with the plastic tie ㊱ and ㊲.

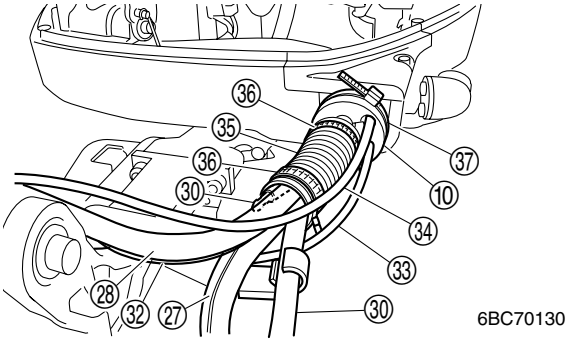

NOTE:

- To route the hoses, lead and cables, see "Electrical component and wiring harness routing" (8-13).
- Check that the fuel hose ㉚, 10-pin main harness ㉘, speedometer hose ㉛, warning indicator lead ㉜, battery cable ㉗, throttle cable ㉞ and shift cable ㉝ are no interference with the steering friction plate assembly.
- Install the corrugated tube ㉟ to contact the grommet ⑩.

12. Install the corrugate tube ㊳ (230 mm (9.1 in)), and then fasten it with the plastic tie ㊱.

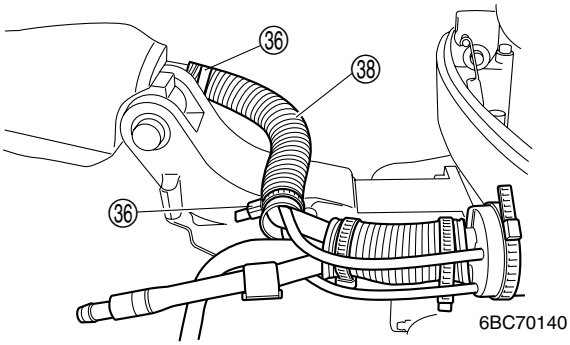

NOTE:

To route the hoses, lead and cables, see "Electrical component and wiring harness routing" (8-13).

13. Connect the shift cable and throttle cable.

NOTE:

To connect the shift cable and throttle cable, see "Setting the throttle cable and shift cable" (1-22).

Setting the steering friction plate (tiller handle model)

1. Install the steering friction plate assembly.

NOTE:

To install the steering friction plate assembly, see "Assembling the steering friction plate" (7-10).

Checking the fuel system

1. Check that the fuel hoses are securely connected and that the fuel tank is filled with fuel.

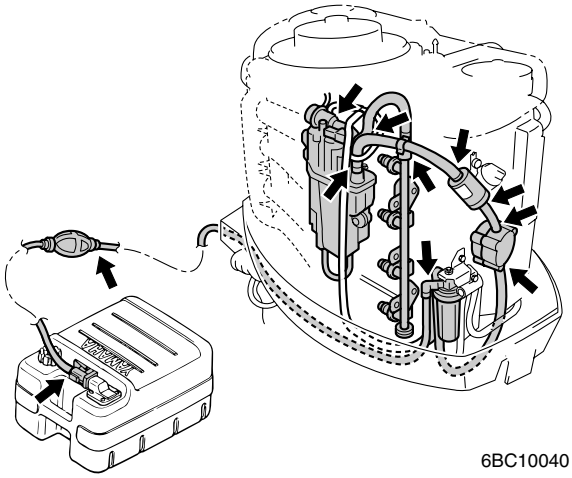

CAUTION:

This is a 4-stroke engine. Never use premixed fuel or 2-stroke outboard motor oil.

Checking the engine oil level

NOTE:
The engine is shipped from the factory without engine oil. After opening the packing, be sure to pour the specified amount of the recommended engine oil.

1. Check the engine oil level.

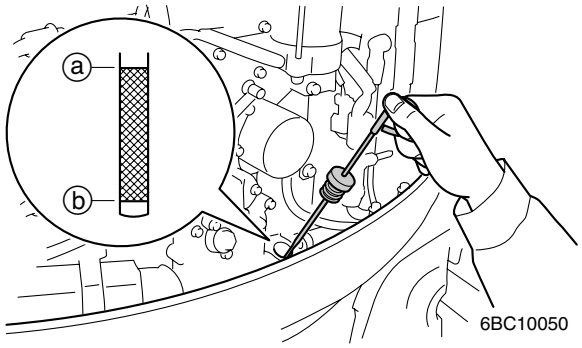

NOTE:
If the engine oil is below the minimum level mark ⓑ, add sufficient oil until the level is between ⓐ and ⓑ.

Recommended engine oil:
4-stroke motor oil
API: SE, SF, SG, SH, SJ or SL
SAE: 5W-30, 10W-30 or 10W-40
Engine oil quantity:
Without oil filter replacement:
4.3 L (4.55 US qt, 3.78 Imp qt)

Checking the gear oil level

1. Check the gear oil level.

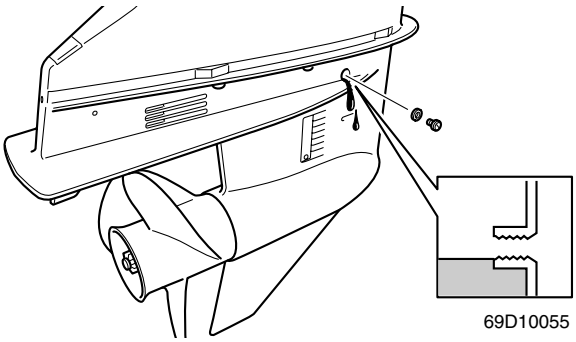

NOTE:
If the oil is at the correct level, a small amount of oil should overflow out of the check hole when the gear oil check screw is removed.

Setting the battery

1. Check the capacity, electrolyte level and specified gravity of the battery.

Recommended battery capacity:
CCA/EN: 430 A
20HR/IEC: 70 Ah
Electrolyte specified gravity:
1.280 at 20°C (68°F)

2. Check that the positive and negative battery cables are securely connected.

Checking the outboard motor mounting height

1. Check that the anti-cavitation plate is aligned with the bottom of the boat. If the mounting height is too high, cavitation will occur and propulsion will be reduced. Also, the engine speed will increase abnormally and cause the engine to overheat. If the mounting height is too low, water resistance will increase and reduce engine efficiency.

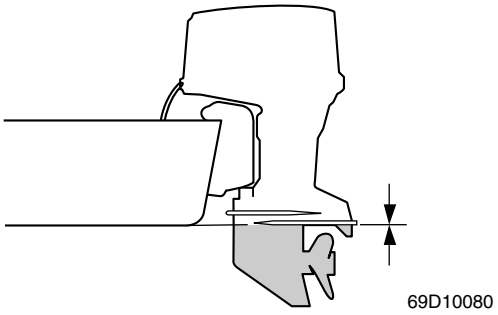

NOTE:
The optimum mounting height is affected by the combination of the boat and the outboard motor. To determine the optimum mounting height, test run the outboard motor at different heights.

2. Check that the clamp brackets are secured with the mounting bolts.

Setting the throttle cable and shift cable

1. Set the shift lever to the “N” position and throttle grip to the fully-closed position. (tiller handle model)
   Set the remote control lever to the “N” position and throttle lever to the fully-closed position. (remote control model)

2. Check that the throttle lever ① on the throttle body assembly contacts ⓐ the fully-closed stopper ②.

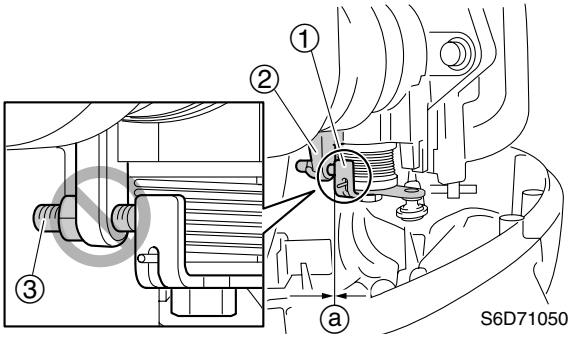

CAUTION:

Do not loosen the throttle stop screw ③.

NOTE:

If they are not contacting, see “Checking the throttle system” (3-9)

3. Connect the throttle cable ④ to the set pin ⑤ on the accelerator cam, and then tighten the locknut ⑥. Then install the clip ⑦.

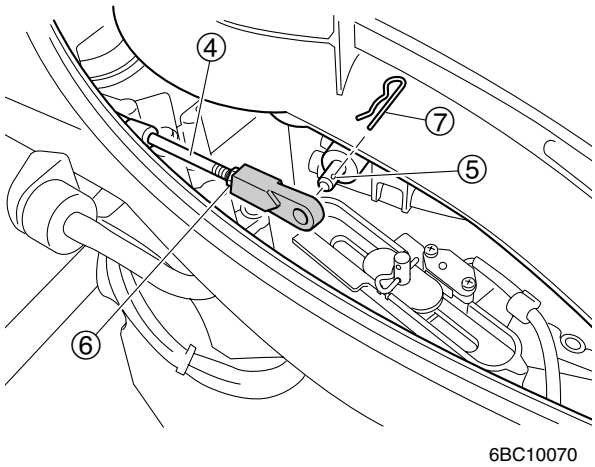

NOTE:

Pull the throttle cable ④ towards the engine to remove any free play in the cable before connecting the throttle cable.

4. Check that the alignment mark ⓑ on the bushing is aligned with the alignment mark ⓒ on the bracket.

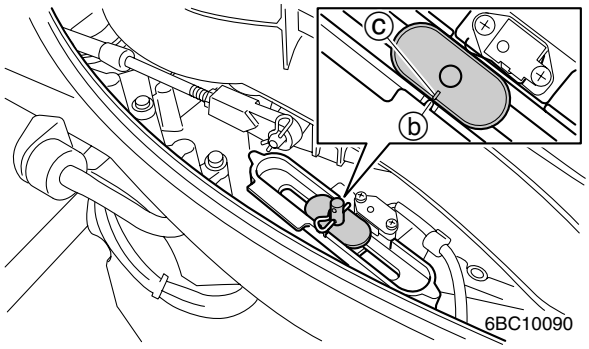

5. Connect the shift cable ⑧ to the set pin ⑨, and then tighten the locknut ⑩. Then install the clip ⑪.

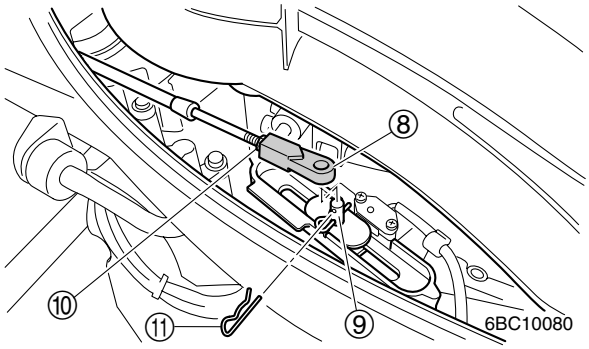

6. Check the position of the throttle cable joint and shift cable joint.

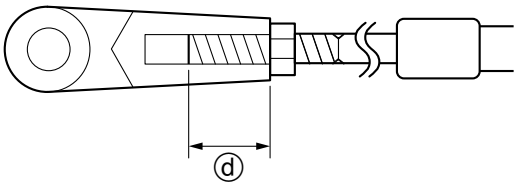

S6AG1090

⚠WARNING

The throttle cable joint and shift cable joint must be screwed in a minimum of 8.0 mm (0.31 in) ⓓ.

Checking the gear shift and throttle operation

1. Check that the gear shift operates smoothly when the shift lever is shifted from the “N” to “F” or “R” position. (tiller handle model)
   Check that the gear shift operates smoothly when the remote control lever is shifted from the “N” to “F” or “R” position. (remote control model)

NOTE:
The shift lever cannot be operated unless the throttle grip is in the fully-closed position (tiller handle model)

2. Check that the throttle operates smoothly when the throttle grip is turned from the fully-closed position to the fully-opened position ⓐ. (tiller handle model)
   Check that the throttle operates smoothly when the remote control lever is shifted from the “F” or “R” position to the fully-opened positions ⓐ. (remote control model)

A

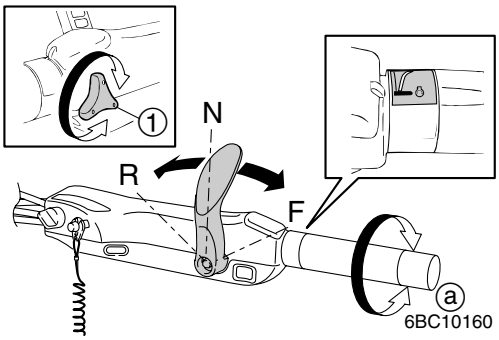

6BC10160

B

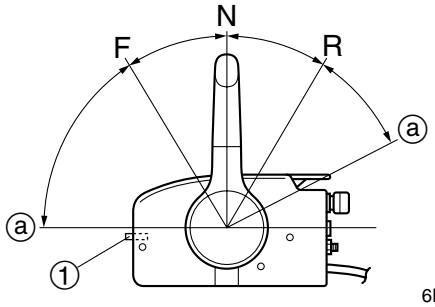

6F610120

A Tiller handle model
B Remote control model

NOTE:
The resistance can be adjusted using the throttle friction adjuster ①.

3. Check that the shift lever cannot be set to the “F” or “R” position when the throttle grip is not in the fully-closed position. (tiller handle model)

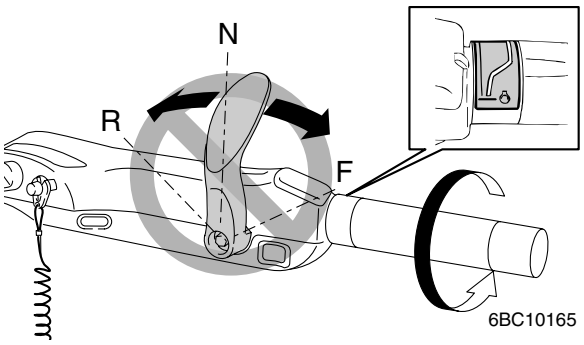

6BC10165

Checking the steering operation

1. Check the steering friction for proper adjustment. (tiller handle model)

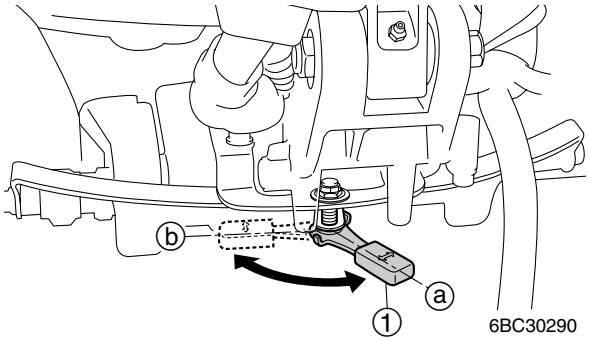

6BC30290

NOTE:

- To increase the friction, move the steering lock lever ① in direction ⓐ.
- To decrease the friction, move the steering lock lever ① in direction ⓑ.
- To adjust the steering friction plate assembly, see “Checking the steering system (tiller handle model)” (3-13).

2. Check that the steering operates smoothly.

A

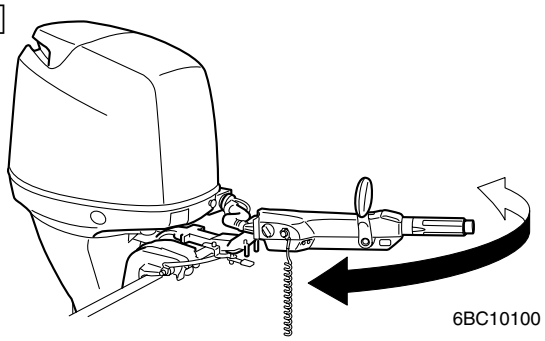

B

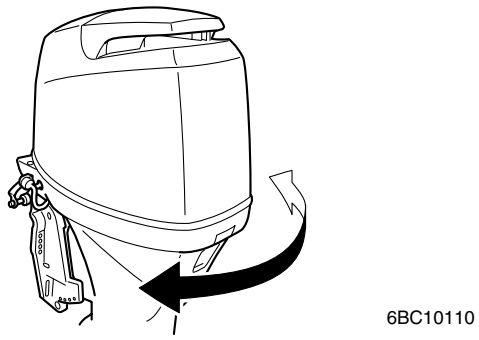

A Tiller handle model
B Remote control model

NOTE:

Check that there is no interference with wires or hoses when the outboard motor is steered.

Checking the tilt operation

1. Check that the outboard motor tilts up smoothly when the tilt lock lever ① in the tilt position ⓐ and stops partially when the tilt lock lever in the lock position ⓑ.

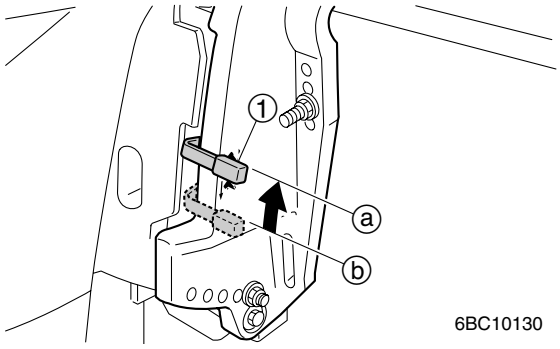

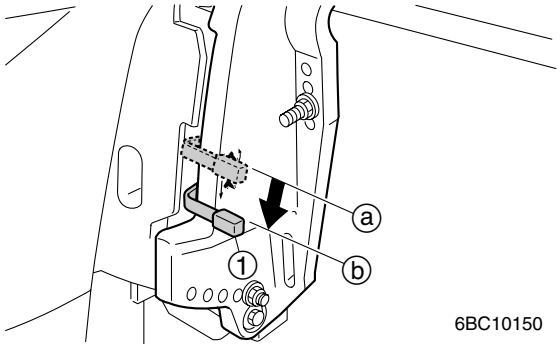

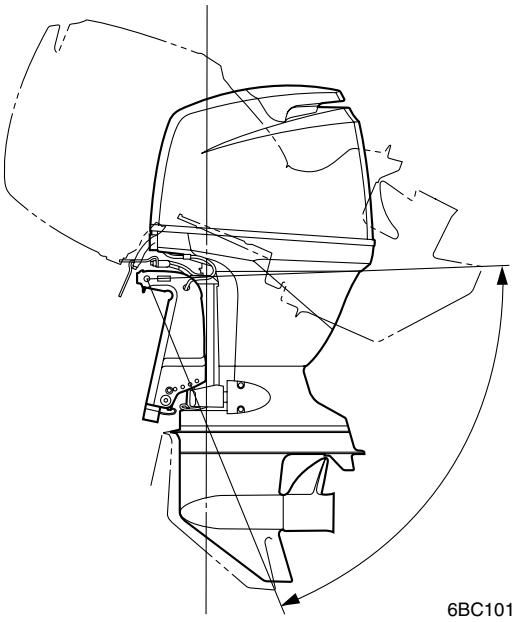

2. Fully tilt the outboard motor up, and then support it with the tilt stop lever ② to check the lock mechanism of the tilt stop lever.

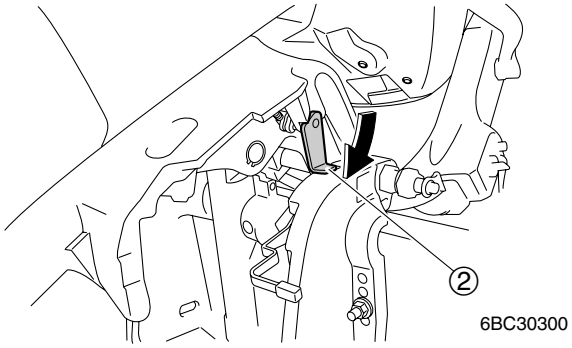

NOTE:
Check that there is no interference with wires or hoses when the outboard motor is tilted up.

Checking the engine start switch and engine stop lanyard switch

1. Check that the engine starts when the engine start switch is turned to “START”.

2. Check that the engine turns off when the engine start switch is turned to “OFF”.

A

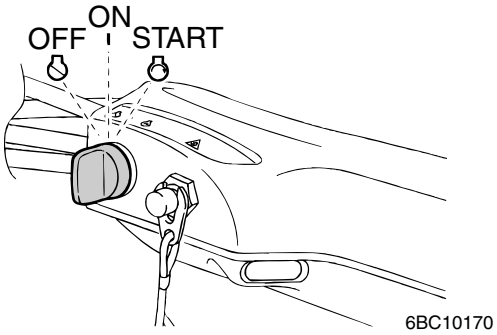

B

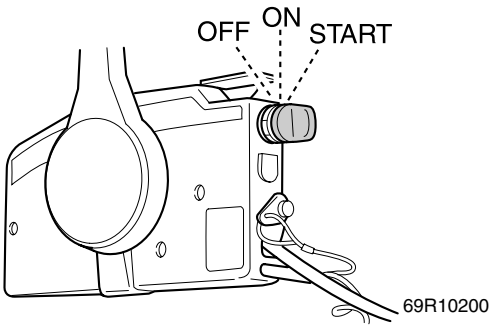

A Tiller handle model
B Remote control model

3. Check that the engine turns off when the clip is removed from the engine stop lanyard switch.
   Check that the engine turns off when the engine stop lanyard switch is pushed. (tiller handle model)

A

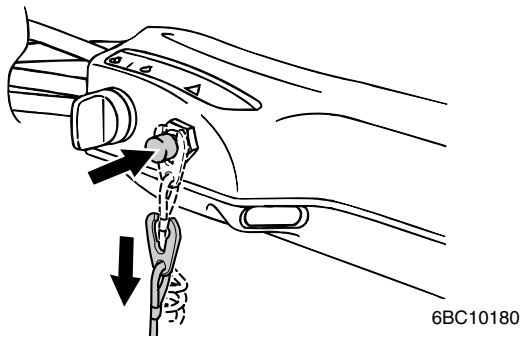

B

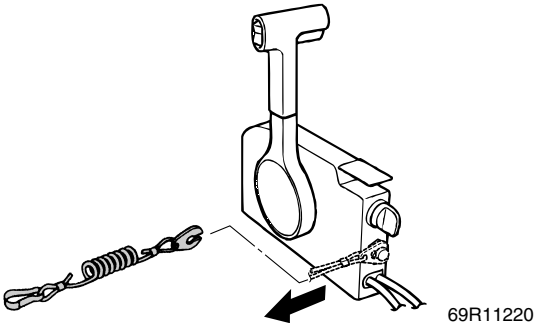

A Tiller handle model
B Remote control model

Checking the cooling water pilot hole

1. Place the lower unit in water, and then start the engine.

2. Check for water flow from the cooling water pilot hole.

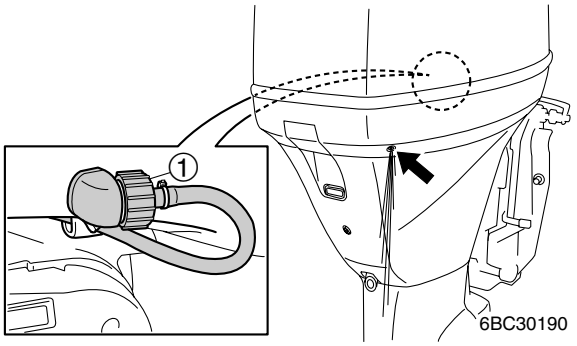

NOTE:
Make sure that the cooling water hoses are securely connected and the flushing hose joint adapter ① is not loose or damaged.

Test run

1. Start the engine, and then check that the gear shift operates smoothly.
2. Check the engine idle speed after the engine has been warmed up.
3. Operate at trolling speed.
4. Run the outboard motor for 1 hour at 2,000 r/min or at half throttle, then for another hour at 3,000 r/min or at 3/4 throttle.
5. Check that the outboard motor does not tilt up when shifting into reverse and that water does not flow in over the transom.

NOTE:
The test run is part of the break-in operation.

Break-in

During the test run, perform the break-in operation in the following 3 stages.

1. 1 hour ⓐ at 2,000 r/min or at approximately half throttle.
2. 1 hour ⓑ at 3,000 r/min or 3/4 throttle and 1 minute out of every 10 at full throttle.
3. 8 hour ⓒ with the engine at any speed. However, avoid operating at full throttle for more than 5 minutes at a time.

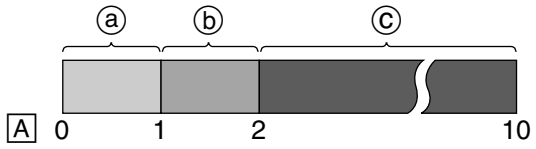

S69J1240

A Hours

After test run

1. Check for water in the gear oil.
2. Check for fuel leakage in the cowling.
3. Flush the cooling water passage with fresh water using the flushing kit and with the engine running at idle.

CAUTION:
Be sure to supply sufficient water and water passage when flushing the cooling water passages. If sufficient water and sufficient water pressure are not supplied, the engine can overheat.

NOTE:
When using the flushing devise, flush the cooling water passages without starting the engine.

— MEMO —

Specification

General specification 2-1

Maintenance specification 2-3
Power unit 2-3
Fuel system 2-6
Lower unit 2-7
Electrical 2-7
Dimension 2-10

Tightening torque 2-13
Specified torque 2-13
General torque 2-15

General specification

Item	Unit	Model	
		F75CEHD	F75CED
Dimension			
Overall length	mm (in)	1,508 (59.4)	825 (32.5)
Overall width	mm (in)	486 (19.1)	
Overall height			
(L)	mm (in)	1,596 (62.8)	
(X)	mm (in)	1,723 (67.8)	
Boat transom height			
(L)	mm (in)	508 (20.0)	
(X)	mm (in)	635 (25.0)	
Weight			
(with aluminum propeller)			
(L)	kg (lb)	179.0 (395)	173.5 (382)
(X)	kg (lb)	184.5 (407)	179.0 (395)
(with stainless propeller)			
(L)	kg (lb)	181.0 (399)	175.5 (387)
(X)	kg (lb)	186.5 (411)	181.0 (399)
Performance			
Maximum output	kW (HP)	55.2 (75) at 5,500 r/min	
Full throttle operating range	r/min	5,000–6,000	
Maximum fuel consumption	L(US gal, Imp gal)/hr	29.0 (7.7, 6.4) at 6,000 r/min	
Engine idle speed	r/min	700 ± 50	
Power unit			
Type		4-stroke, L	
Cylinder quantity		4	
Total displacement	cm^3 (cu. in)	1,596 (97.4)	
Bore × stroke	mm (in)	79.0 × 81.4 (3.11 × 3.20)	
Compression ratio		8.9	
Control system		Tiller handle	Remote control
Starting system		Electric	
Fuel system		Fuel injection	
Ignition control system		TCI	
Advance type		Micro computer	
Maximum generator output	V, A	12, 25	
Spark plug		LFR5A-11 (NGK)	
Firing order		1-3-4-2 (Normal operation)	
Cooling system		Water	
Exhaust system		Propeller boss	
Lubrication system		Wet sump	

Item	Unit	Model	
		F75CEHD	F75CED
Fuel and oil			
Fuel type		Regular unleaded gasoline	
Engine oil		4-stroke motor oil	
Engine oil grade (*1)	API	SE, SF, SG, SH, SJ or SL	
	SAE	5W-30, 10W-30 or 10W-40	
Engine oil quantity			
(without oil filter replacement)	L (US qt, Imp qt)	4.3 (4.55, 3.78)	
(with oil filter replacement)	L (US qt, Imp qt)	4.5 (4.76, 3.96)	
Gear oil type		Hypoid gear oil	
Gear oil grade (*2)	API	GL-4	
	SAE	90	
Gear oil quantity	cm^3 (US oz, Imp oz)	760 (25.7, 26.8)	
Bracket unit			
Trim angle (at 12° boat transom)	Degree	–3 to 12	
Tilt-up angle	Degree	64	
Steering angle	Degree	30 + 30	
Drive unit			
Gear shift positions		F-N-R	
Gear ratio		2.15 (28/13)	
Reduction gear type		Spiral bevel gear	
Clutch type		Dog clutch	
Propeller shaft type		Spline	
Propeller direction (rear view)		Clockwise	
Propeller mark		K	
Electrical			
Battery minimum capacity			
CCA/EN	A	430	
20HR/IEC	Ah	70	
Electrolyte specific gravity at 20 °C (68 °F)		1.280	

(*1) If the recommended engine oil grades are not available, use engine oil with an API classification of SH, SJ or SL and an SAE classification of 15W-40, 20W-40 or 20W-50.

(*2) Meeting both API and SAE requirements

Maintenance specification

Power unit

Item	Unit	Model	
		F75CEHD	F75CED
Power unit			
Minimum compression pressure (*1)	kPa (kgf/cm², psi)	930 (9.3, 132)	
Oil pressure (*2)	kPa (kgf/cm², psi)	510 (5.1, 74) at engine idle speed	
Cylinder head			
Warpage limit 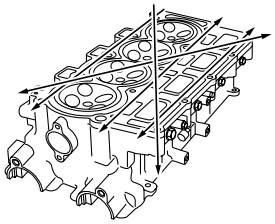 (lines indicate straightedge position)	mm (in)	0.10 (0.0039)	
Camshaft cap inside diameter	mm (in)	25.000–25.021 (0.9843–0.9851)	
Camshaft			
Intake (A) 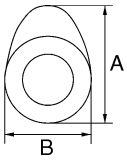	mm (in)	36.48–36.58 (1.4362–1.4402)	
Exhaust (A)	mm (in)	36.90–37.06 (1.4528–1.4591)	
Intake (B)	mm (in)	29.95–30.05 (1.1791–1.1831)	
Exhaust (B)	mm (in)	29.92–30.08 (1.1780–1.1842)	
Camshaft journal diameter	mm (in)	24.960–24.980 (0.9827–0.9835)	
Camshaft runout limit	mm (in)	0.03 (0.0012)	
Valve			
Valve clearance (cold)			
Intake	mm (in)	0.20 ± 0.03 (0.008 ± 0.001)	
Exhaust	mm (in)	0.34 ± 0.03 (0.013 ± 0.001)	
Head diameter (A) 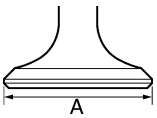			
Intake	mm (in)	29.0–29.2 (1.14–1.15)	
Exhaust	mm (in)	24.0–24.2 (0.94–0.95)	
Face width (B) 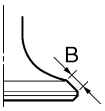			
Intake	mm (in)	2.00–2.43 (0.0787–0.0957)	
Exhaust	mm (in)	2.28–2.71 (0.0898–0.1067)	
Seat contact width (C) 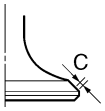			
Intake and exhaust	mm (in)	1.20–1.60 (0.0472–0.0630)	
Margin thickness (D) 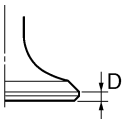			
Intake	mm (in)	0.80–1.20 (0.0315–0.0472)	
Exhaust	mm (in)	1.00–1.40 (0.0394–0.0551)	

(*1) Measuring conditions:
Ambient temperature 20 °C (68 °F), wide open throttle, with spark plugs removed from all cylinders. The figures are for reference only.

(*2) For details of the checking method, see “Checking the oil pressure” (5-2). The figures are for reference only.

Item	Unit	Model	
		F75CEHD	F75CED
Stem diameter			
Intake	mm (in)	5.975–5.990 (0.2352–0.2358)	
Exhaust	mm (in)	5.960–5.975 (0.2346–0.2352)	
Stem runout limit			
Intake and exhaust	mm (in)	0.01 (0.0004)	
Guide inside diameter			
Intake and exhaust	mm (in)	6.000–6.018 (0.2362–0.2369)	
Stem-to-guide clearance (*1)			
Intake	mm (in)	0.010–0.043 (0.0004–0.0017)	
Exhaust	mm (in)	0.025–0.058 (0.0010–0.0023)	
Guide installation position	mm (in)	11.5 ± 0.2 (0.45 ± 0.01)	
Valve spring			
Free length (*1)	mm (in)	50.54 (1.9898)	
Tilt limit	mm (in)	2.6 (0.10)	
Valve shim			
Valve shim thickness (in 0.025 mm increments)	mm (in)	2.00–3.30 (0.08–0.13)	
Cylinder			
Bore size	mm (in)	79.000–79.020 (3.1102–3.1110)	
Piston			
Piston diameter (D)	mm (in)	78.928–78.949 (3.1074–3.1082)	
Measuring point (H)	mm (in)	13.0 (0.51)	
Piston clearance (*1)	mm (in)	0.070–0.080 (0.0028–0.0032)	
Piston pin boss bore	mm (in)	18.008–18.015 (0.7090–0.7093)	
Piston ring groove			
Top ring	mm (in)	1.23–1.25 (0.048–0.049)	
2nd piston ring	mm (in)	1.52–1.54 (0.060–0.061)	
Oil ring	mm (in)	2.51–2.53 (0.099–0.100)	
Oversize piston diameter	mm (in)	79.25 (3.1201)	
Piston ring			
Top ring			
Dimension B	mm (in)	1.17–1.19 (0.0461–0.0469)	
Dimension T	mm (in)	2.80–3.00 (0.1102–0.1181)	
End gap (*1)	mm (in)	0.15–0.35 (0.0059–0.0138)	
Side clearance	mm (in)	0.04–0.08 (0.0016–0.0032)	
2nd piston ring			
Dimension B	mm (in)	1.47–1.49 (0.0579–0.0587)	
Dimension T	mm (in)	3.00–3.20 (0.1181–0.1260)	
End gap (*1)	mm (in)	0.70–0.90 (0.0276–0.0354)	
Side clearance	mm (in)	0.03–0.07 (0.0012–0.0028)	

(*1) The figures are for reference only.

Item	Unit	Model	
		F75CEHD	F75CED
Oil ring			
Dimension B	mm (in)	2.38–2.48 (0.0937–0.0976)	
Dimension T (*1)	mm (in)	2.40 (0.0945)	
End gap (*1)	mm (in)	0.20–0.70 (0.0079–0.0276)	
Side clearance	mm (in)	0.03–0.15 (0.0012–0.0059)	
Connecting rod			
Big end inside diameter	mm (in)	47.025–47.045 (1.8514–1.8522)	
Big end side clearance (*1)	mm (in)	0.14–0.28 (0.0055–0.0110)	
Crankpin oil clearance	mm (in)	0.024–0.044 (0.0009–0.0017)	
Big end bearing thickness			
Yellow	mm (in)	1.499–1.506 (0.0590–0.0593)	
Green	mm (in)	1.506–1.513 (0.0593–0.0596)	
Blue	mm (in)	1.513–1.520 (0.0596–0.0598)	
Red	mm (in)	1.520–1.527 (0.0598–0.0601)	
Crankshaft			
Crankshaft journal diameter	mm (in)	47.984–48.000 (1.8891–1.8898)	
Crankpin diameter	mm (in)	43.982–44.000 (1.7316–1.7323)	
Crankpin width	mm (in)	21.00–21.07 (0.8268–0.8295)	
Crankshaft runout limit	mm (in)	0.03 (0.0012)	
Crankcase			
Crankshaft journal oil clearance	mm (in)	0.024–0.044 (0.0009–0.0017)	
Upper crankcase main bearing thickness			
Green	mm (in)	2.992–2.999 (0.1178–0.1181)	
Blue	mm (in)	2.999–3.006 (0.1181–0.1183)	
Red	mm (in)	3.006–3.013 (0.1183–0.1186)	
Upper crankcase main bearing thickness (J3)			
Green	mm (in)	2.992–2.999 (0.1178–0.1181)	
Blue	mm (in)	2.999–3.006 (0.1181–0.1183)	
Red	mm (in)	3.006–3.013 (0.1183–0.1186)	
Lower crankcase main bearing thickness			
Yellow	mm (in)	3.010–3.017 (0.1185–0.1188)	
Green	mm (in)	3.017–3.024 (0.1188–0.1191)	
Blue	mm (in)	3.024–3.031 (0.1191–0.1193)	
Red	mm (in)	3.031–3.038 (0.1193–0.1196)	

(*1) The figures are for reference only.

Item	Unit	Model	
		F75CEHD	F75CED
Thermostat			
Opening temperature			
at 0.05 mm (0.0020 in)	°C (°F)	58–62 (136–143)	
Fully open temperature	°C (°F)	70 (158)	
Valve open lower limit	mm (in)	4.3 (0.17)	
Oil pressure switch			
Specified oil pressure	kPa (kgf/cm², psi)	127.5–166.7 (1.275–1.667, 18.49–24.17)	

2

Fuel system

Item	Unit	Model	
		F75CEHD	F75CED
Fuel system			
Fuel pressure			
with in 3 seconds (*1)	kPa (kgf/cm², psi)	300 (3.0, 43.5)	
after 3 seconds (*1)	kPa (kgf/cm², psi)	260 (2.6, 37.7)	
at engine idle speed (*2)	kPa (kgf/cm², psi)	230 (2.3, 33.4)	
Fuel filter assembly holding pressure			
Fuel inlet positive pressure	kPa (kgf/cm², psi)	200 (2.0, 29.0)	
Fuel outlet negative pressure	kPa (kgf/cm², psi)	80 (0.8, 11.6)	
Float height			
Water detection position	mm (in)	43 (1.69)	
Vapor separator float height (*2)	mm (in)	35 ± 1.0 (1.38 ± 0.04)	

(*1) Engine start switch to “ON”. The figures are for reference only.
(*2) The figures are for reference only.

Lower unit

Item	Unit	Model	
		F75CEHD	F75CED
Lower unit			
Holding pressure	kPa (kgf/cm², psi)	70 (0.7, 10)	
Gear backlash			
Pinion-to-forward gear	mm (in)	0.18–0.54 (0.0071–0.0213)	
Pinion-to-reverse gear	mm (in)	0.86–1.26 (0.0339–0.0496)	
Pinion shims	mm	0.10, 0.12, 0.15, 0.18, 0.30, 0.40, 0.50	
Forward gear shims	mm	0.10, 0.12, 0.15, 0.18, 0.30, 0.40, 0.50	
Reverse gear shims	mm	0.10, 0.12, 0.15, 0.18, 0.30, 0.40, 0.50	
Propeller shaft			
Runout limit	mm (in)	0.02 (0.0008)	
Drive shaft			
Runout limit	mm (in)	0.2 (0.008)	

Electrical

Item	Unit	Model	
		F75CEHD	F75CED
Starter motor			
Type		Sliding gear	
Output	kW	1.40	
Cranking time limit	Second	30	
Brushes			
Standard length	mm (in)	15.5 (0.61)	
Wear limit	mm (in)	9.5 (0.37)	
Commutator			
Standard diameter	mm (in)	29.0 (1.14)	
Wear limit	mm (in)	28.0 (1.10)	
Standard undercut	mm (in)	0.8 (0.03)	
Wear limit	mm (in)	0.2 (0.01)	
Ignition and ignition control system			
Spark plug gap	mm (in)	1.0–1.1 (0.039–0.043)	
Ignition coil output peak voltage (*1)			
Primary (B/W – Ground)			
at cranking (loaded)	V	237	
at 1,500 r/min (loaded)	V	284	
at 3,500 r/min (loaded)	V	286	

(*1) The figures are for reference only.

Item	Unit	Model	
		F75CEHD	F75CED
Ignition coil resistance			
at 20 °C (68 °F)			
Primary (R – B/W)	Ω	1.53–2.07	
Secondary	kΩ	12.5–16.9	
Spark plug wire resistance (*1)			
at 20 °C (68 °F)			
#1	kΩ	4.5–10.7	
#2	kΩ	3.3–8.0	
#3	kΩ	3.7–8.9	
#4	kΩ	4.3–10.2	
Pulser coil assembly output peak voltage (*1)			
(W/R – B, W/B – B)			
at cranking (unloaded)	V	3.1	
at cranking (loaded)	V	3.1	
at 1,500 r/min (loaded)	V	15.9	
at 3,500 r/min (loaded)	V	29.9	
Pulser coil assembly resistance (*1)			
(W/R – B, W/B – B)			
at 20 °C (68 °F)	Ω	459.0–561.0	
Engine electric control system			
Fuse			
Starter relay	V, A	12, 30	
Main, Rectifier Regulator	V, A	12, 20	
Engine start switch	V, A	12, 20	
ECM, Ignition coil, High-pressure Fuel pump, Fuel injector, ISC	V, A	12, 20	
TPS output voltage (P – B)	V	0.8–1.2 throttle fully-closed position	
ISC resistance (*1)			
at 20 °C (68 °F)			
(G/Y – G, G/R – G/B)	Ω	27–33	
Sensor assembly resistance (*1) (B/Y – B)			
at 0 °C (32 °F)	kΩ	5.40–6.60	
at 80 °C (176 °F)	kΩ	0.282–0.388	
Cooling water temperature sensor resistance (*1) (B/Y – B)			
at 0 °C (32 °F)	kΩ	5.21–6.37	
at 20 °C (68 °F)	kΩ	2.45	
at 80 °C (176 °F)	kΩ	0.290–0.354	

(*1) The figures are for reference only.

Item	Unit	Model	
		F75CEHD	F75CED
Fuel control system			
Fuel injector resistance (*1)			
at 21 °C (70 °F)	Ω	12.0	
High-pressure fuel pump resistance (*1)			
at 20 °C (68 °F)	Ω	0.6	
Charging system			
Stator assembly output peak voltage (*1) (W – W)			
at cranking (unloaded)	V	12.4	
at 1,500 r/min (unloaded)	V	45.2	
at 3,500 r/min (unloaded)	V	96.6	
Stator assembly resistance (*1) (W – W)			
at 20 °C (68 °F)	Ω	0.24–0.36	
Rectifier Regulator output peak voltage (*1) (R – Ground)			
at 1,500 r/min (unloaded)	V	13.0	
at 3,500 r/min (unloaded)	V	13.0	

(*1) The figures are for reference only.

Dimension

Exterior F75CEHD

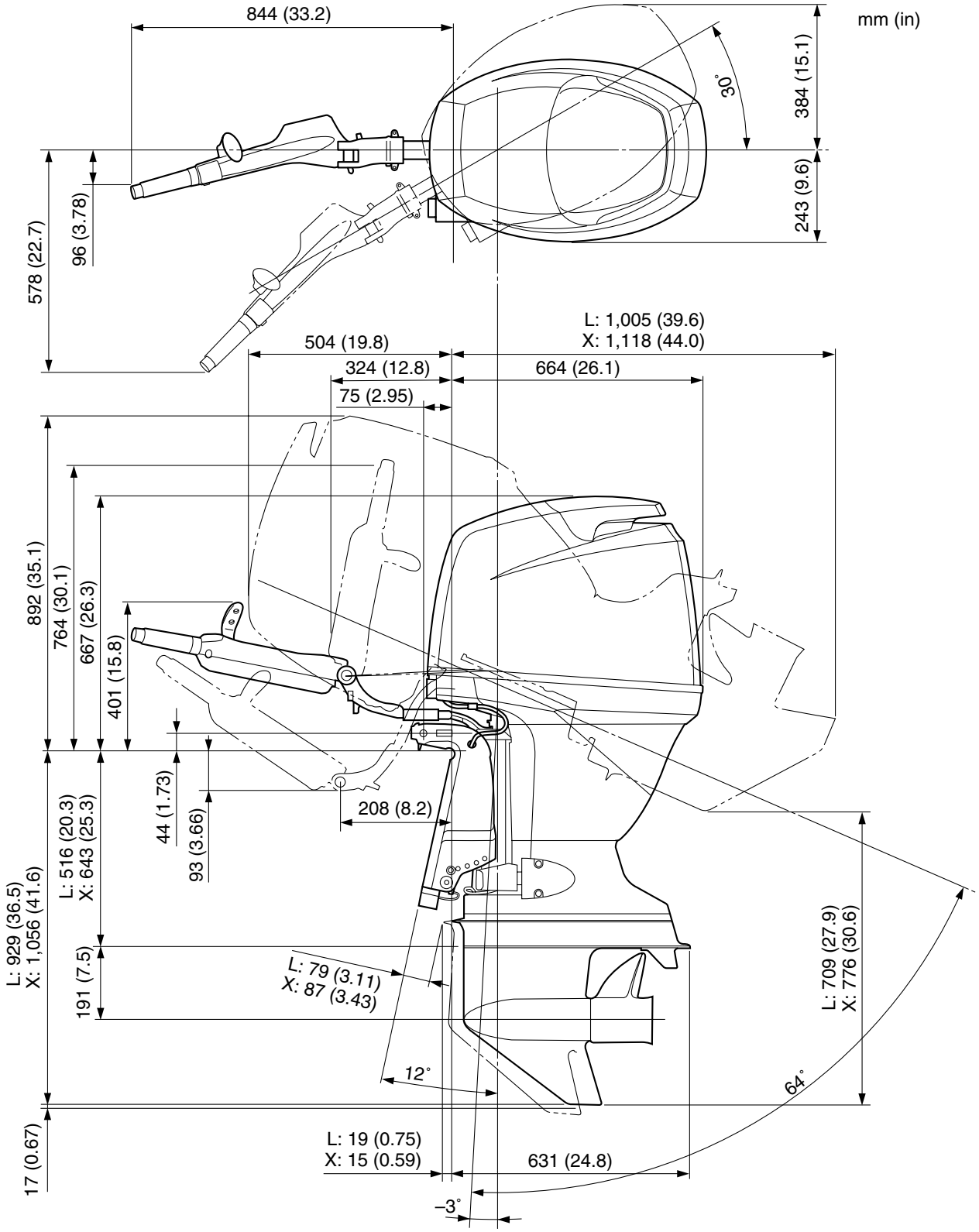

6BC2001M

Exterior F75CED

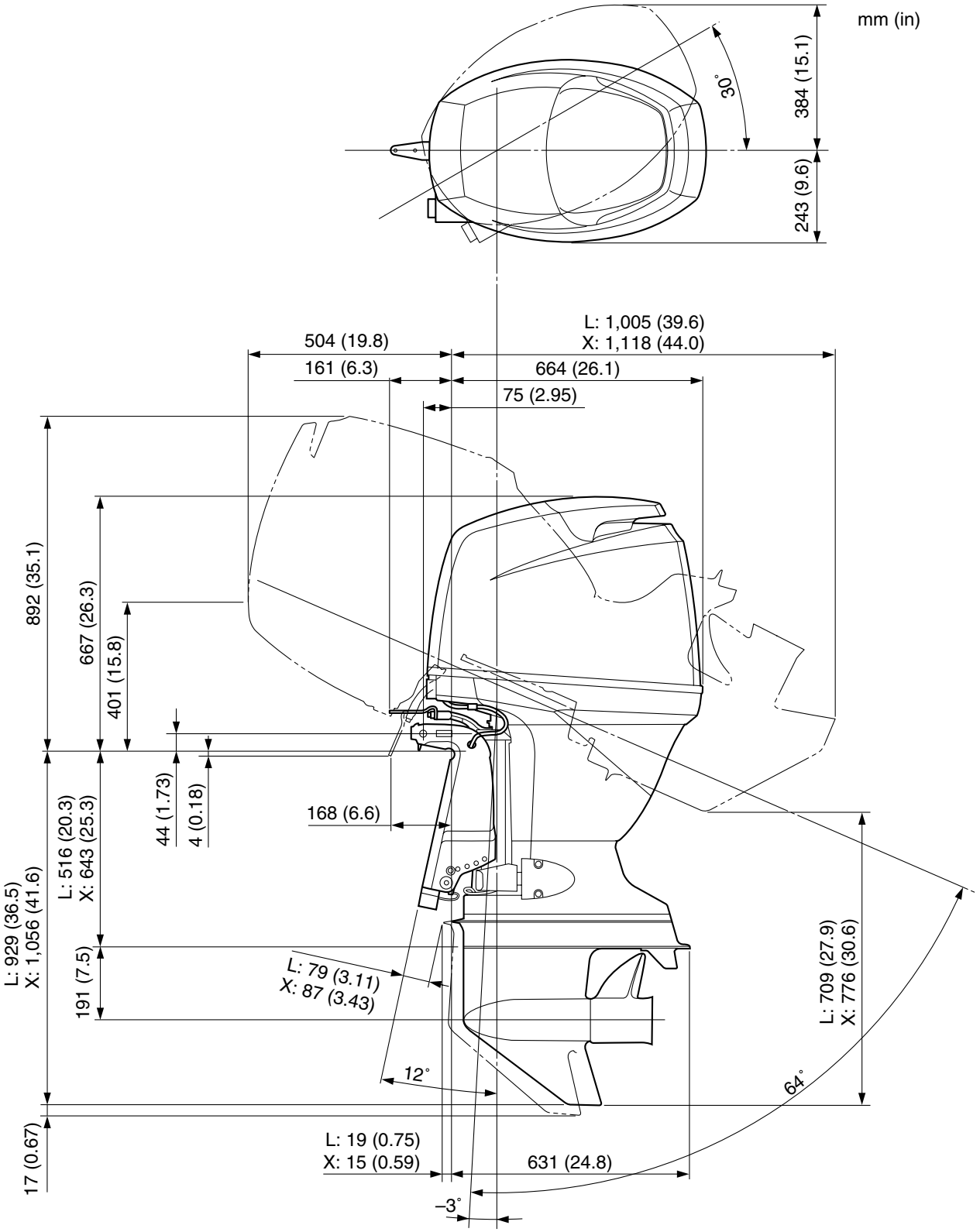

6BC2002M

Clamp bracket

mm (in)

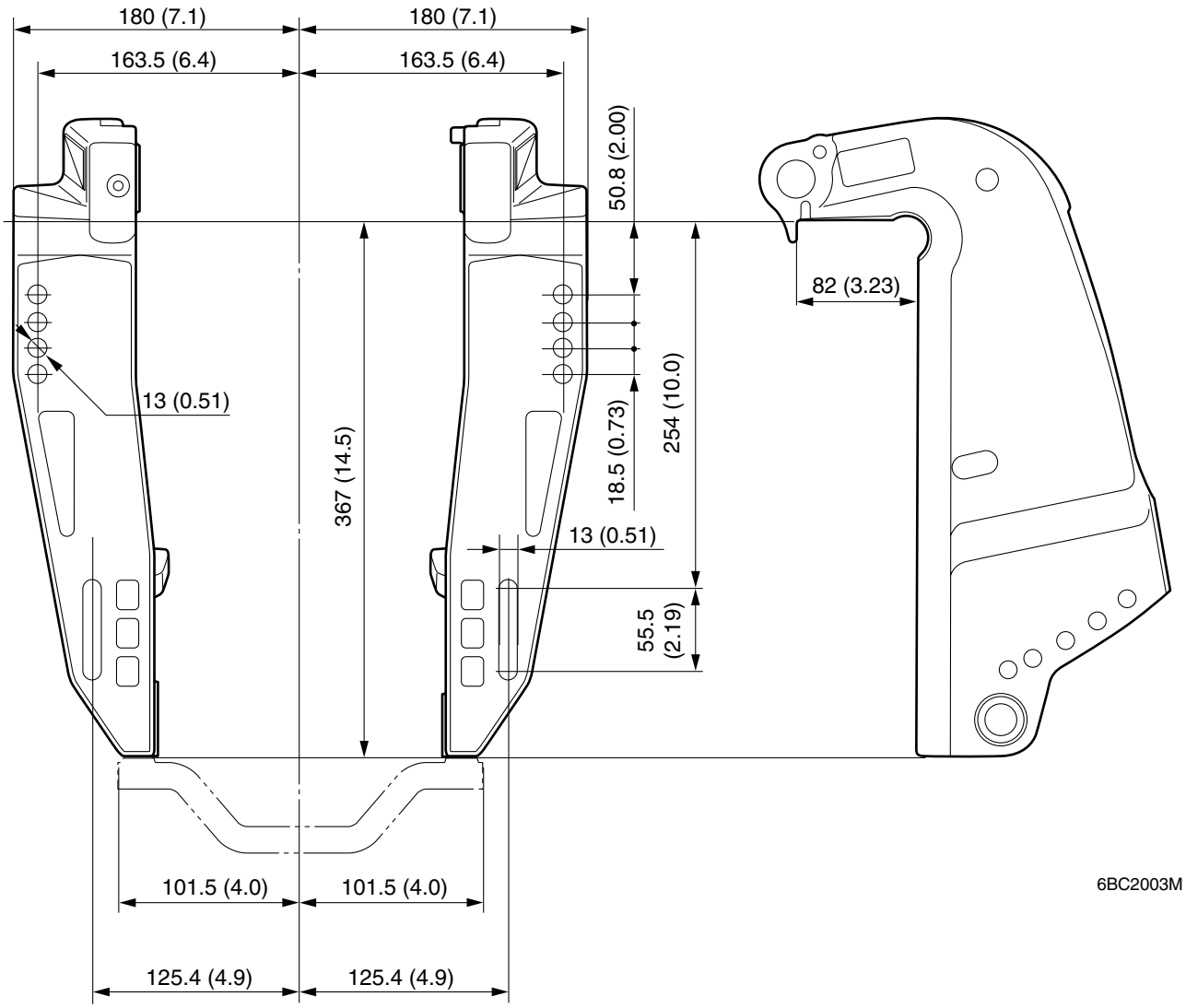

Tightening torque

Specified torque

Part to be tightened		Thread size	Tightening torques		
			N·m	kgf·m	ft·lb
Fuel system					
Fuel pump assembly bolt		M6	10	1.0	7.4
Fuel filter assembly nut		—	18	1.8	13.3
Fuel pump screw		—	4	0.4	3.0
ISC screw		—	3.7	0.37	2.7
Throttle body assembly bolt		M6	8	0.8	5.9
Sensor assembly screw		—	3.7	0.37	2.7
Fuel rail bolt		M6	8	0.8	5.9
Vapor separator drain screw		—	1.5	0.15	1.1
Fuel cooler screw		—	3	0.3	2.2
Pressure regulator bolt		M6	5	0.5	3.7
Check valve		—	10	1.0	7.4
Float chamber screw		—	3	0.3	2.2
Joint screw		—	4	0.4	3.0
Baffle plate screw		—	2	0.2	1.5
Power unit					
Power unit mounting bolt	1st	M10	42	4.2	31.0
	2nd		42	4.2	31.0
	1st	M8	18	1.8	13.3
	2nd		18	1.8	13.3
Apron screw		—	4	0.4	3.0
Flywheel magnet nut		—	215	21.5	158.6
Starter motor bolt		M8	29	2.9	21.4
Spark plug wire cover screw		—	4	0.4	3.0
Starter relay terminal bolt		M6	4	0.4	3.0
Starter relay holder screw		—	3	0.3	2.2
Main/high-pressure fuel pump relay screw		—	3	0.3	2.2
Oil pressure switch		—	8	0.8	5.9
Oil pressure switch lead terminal bolt		M4	2	0.2	1.5
Terminal nut (positive battery cable)		—	9	0.9	6.6
Terminal nut (magnet switch lead)		—	9	0.9	6.6
Ignition coil bolt		M6	7	0.7	5.2
Timing belt tensioner bolt		M10	39	3.9	28.8
Drive sprocket nut		—	265	26.5	195.5
Driven sprocket bolt		M10	60	6.0	44.3
Camshaft cap bolt	1st	M7	8	0.8	5.9
	2nd		17	1.7	12.5
Cylinder head cover plate screw		—	2	0.2	1.5
Cylinder head cover bolt	1st	M6	8	0.8	5.9
	2nd		8	0.8	5.9

Part to be tightened		Thread size	Tightening torques		
			N·m	kgf·m	ft·lb
Cylinder head bolt	1st	M10	15	1.5	11.1
	2nd		30	3.0	22.1
	3rd		90°		
	1st	M8	14	1.4	10.3
	2nd		28	2.8	20.7
Spark plug		—	25	2.5	18.4
Cylinder block plug		M14	23	2.3	17.0
Oil filter joint		—	49	4.9	36.1
Oil filter		—	18	1.8	13.3
Exhaust cover bolt	1st	M6	6	0.6	4.4
	2nd		12	1.2	8.9
Anode screw		—	3	0.3	2.2
Exhaust cover plug		M18	55	5.5	40.6
Crankcase bolt	1st	M8	14	1.4	10.3
	2nd		28	2.8	20.7
	1st	M10	19	1.9	14.0
	2nd		60°		
Connecting rod cap bolt	1st	M8	18	1.8	13.3
	2nd		80°		
Lower unit					
Trim tab bolt		M10	42	4.2	31.0
Lower unit mounting bolt		M10	39	3.9	28.8
Propeller nut		—	54	5.4	39.8
Gear oil drain screw		—	9	0.9	6.6
Gear oil check screw		—	9	0.9	6.6
Ring nut		—	103	10.3	76.0
Cooling water inlet cover screw		—	4	0.4	3.0
Pinion nut		—	93	9.3	68.6
Bracket unit					
Shift rod detent bolt		—	18	1.8	13.3
Shift position switch screw		—	1	0.1	0.7
Flushing hose adapter screw		—	2	0.2	1.5
Oil pump bolt		M6	10	1.0	7.4
Upper mounting nut		—	51	5.1	37.6
Mount bracket bolt		M8	28	2.8	20.7
Baffle plate screw		—	4	0.4	3.0
Lower mounting nut		—	71	7.1	52.4
Steering arm stud bolt		M10	20	2.0	14.8
Oil pump cover screw		—	4	0.4	3.0
Oil seal housing screw		—	4	0.4	3.0
Oil pan assembly bolt		M8	20	2.0	14.8
Engine oil drain bolt		M14	27	2.7	19.9
Oil strainer bolt		M6	10	1.0	7.4

Part to be tightened	Thread size	Tightening torques		
		N·m	kgf·m	ft·lb
Oil pan bolt	M6	11	1.1	8.1
Exhaust manifold bolt	M6	11	1.1	8.1
Self-locking nut	—	15	1.5	11.1
Grease nipple	—	3	0.3	2.2
Tiller handle model				
Tiller handle self-locking nut	—	37	3.7	27.3
Bracket self-locking nut	—	37	3.7	27.3
Stud bolt	—	48	4.8	35.5
Friction plate bolt	M8	18	1.8	13.3
Self-locking nut (friction plate)	—	18	1.8	13.3
Friction plate nut	—	20	2.0	14.8
Tiller handle pivot nut	—	32	3.2	23.6
Throttle grip screw	—	2	0.2	1.5
Grease nipple	—	3	0.3	2.2
Engine stop lanyard switch nut	—	2.5	0.25	1.8
Engine start switch nut	—	4.4	0.4	3.2
Warning indicator assembly screw	—	2	0.2	1.5

General torque

This chart specifies tightening torques for standard fasteners with a standard ISO thread pitch. Tightening torque specifications for special components or assemblies are provided in applicable sections of this manual. To avoid warpage, tighten multi-fastener assemblies in a crisscross fashion and progressive stages until the specified torque is reached. Unless otherwise specified, torque specifications require clean, dry threads. Components should be at room temperature.

Nut (A)	Bolt (B)	General torque specifications		
		N·m	kgf·m	ft·lb
8 mm	M5	5	0.5	3.6
10 mm	M6	8	0.8	5.8
12 mm	M8	18	1.8	13
14 mm	M10	36	3.6	25
17 mm	M12	43	4.3	31

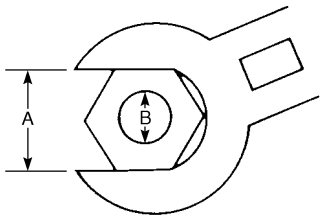

Periodic check and adjustment

Maintenance interval chart **3-1**

Top cowling **3-3**
Checking the top cowling 3-3

Fuel system **3-3**
Checking the fuel joint and fuel hoses (fuel tank-to-fuel injector) 3-3
Checking the fuel filter 3-4
Draining the fuel 3-5

Power unit **3-5**
Checking the engine oil 3-5
Changing the engine oil 3-6
Replacing the oil filter 3-6
Checking the timing belt 3-7
Checking the spark plug 3-7
Checking the thermostat 3-8
Checking the cooling water passage 3-9

Control system **3-9**
Checking the throttle system 3-9
Checking the gear shift system 3-12
Checking the engine idle speed 3-13

Bracket unit **3-13**
Checking the steering system (tiller handle model) 3-13
Checking the tilt system 3-14

Lower unit **3-14**
Checking the gear oil 3-14
Changing the gear oil 3-14
Checking the lower unit for air leakage 3-15
Checking the propeller 3-16

General **3-16**
Checking the anode 3-16
Checking the battery 3-17
Lubricating the outboard motor 3-18

Maintenance interval chart

Use the following chart as a guideline for general maintenance.
Adjust the maintenance intervals according to the operating conditions of the outboard motor.

NOTE:

- The maintenance cycle on these charts assume usage of 100 hours per year and regular flushing of the cooling water passages.
- Maintenance frequency should be adjusted when operating the engine under adverse conditions such as extended trolling.
- According to the results of checking, disassemble and/or repair if necessary.
- Expendable or consumable parts and lubricants will lose their effectiveness over time and through normal usage regardless of the warranty period.
- When operating in salt water, turbid or muddy water, acidic water, the engine should be flushed with clean water after each use.
- When using high-sulfur gasoline, checking the valve clearances may be required more frequently than every 500 hours.

Item	Actions	Initial	Every			Refer to page
		20 hours (3 months)	100 hours (1 year)	300 hours (3 years)	500 hours (5 years)	
Anodes (external)	Check/replace		○			3-16
Anodes (cylinder head)	Check/replace		○			3-16
Anodes (exhaust cover, cover joint)	Replace				○	3-16
Battery	Check/charge	○	○			3-17
Cooling water leakage	Check/replace	○	○			3-9
Cowling clamp	Check/replace		○			3-3
Engine starting condition/ noise	Check	○	○			–
Engine idle speed/noise	Check	○	○			3-13
Engine oil	Check/change	○	○			3-5
Oil filter (cartridge)	Replace		○			3-6
Fuel filter	Check/ replace (*1)	○	○			3-4
Fuel filter (vapor separator)	Replace				○	4-25
Fuel pump	Check/replace			○		4-20
Fuel/oil leakage	Check	○	○			3-3 3-5
Fuel hose	Check/replace	○	○			3-3
Fuel hose	Replace			○		4-1 to 4-6
Gear oil	Check/change	○	○			3-14
Lubrication points	Lubricate	○	○			3-18
Impeller/water pump housing	Check/replace		○			6-5
Impeller/water pump housing	Replace			○		6-5
Propeller/propeller nut/ cotter pin	Check/replace	○	○			3-16
PCV	Check/replace		○			5-42 5-43

Item	Actions	Initial	Every			Refer to page
		20 hours (3 months)	100 hours (1 year)	300 hours (3 years)	500 hours (5 years)	
Shift link/shift cable	Check/adjust/ replace	○	○			3-12
Spark plugs	Check/adjust/ replace		○			3-7
Spark plug wires	Check/replace	○	○			8-31
Pilot water	Check	○	○			3-9
Throttle link/throttle cable/ throttle pick-up timing	Check/adjust/ replace	○	○			3-9
Thermostat	Check/replace		○			3-8
Timing belt	Check/replace		○			3-7
Valve clearance (DOHC)	Check/adjust				○	5-8
Water inlet	Check	○	○			3-9
Engine start switch/ engine stop lanyard switch	Check/replace	○	○			8-27 8-33
Wiring harness connections/ coupler connections	Check/replace	○	○			8-1 to 8-14
Meter/gauge (Yamaha)	Check	○	○			–
Fuel tank (Yamaha)	Check/clean		○			3-3

(*1) Check the water detection switch each time the fuel filter is checked. To check the water detection switch, see “Checking the water detection switch” (8-50).

Item	Actions	Every	Refer to page
		1000 hours	
Exhaust guide/ exhaust manifold	Check/replace	○	7-25
Timing belt	Replace	○	5-11

Top cowling

Checking the top cowling

1. Check the top cowling. Replace the top cowling if cracked or other damaged.

2. Check the rubber trim. Replace the rubber trim if worn, deteriorated or damaged.

3. Check the lock lever, springs, bushings and washers. Replace if worn or damaged.

4. Check the fitting by pushing the top cowling with both hands. Adjust the fittings of the top cowling with the following procedure if it does not fit properly.

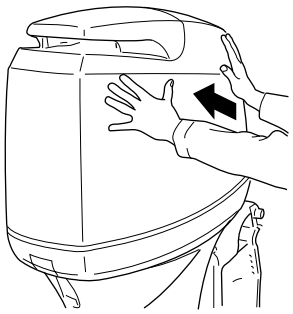

6BC30010

5. Loosen the bolts ①.

6. Move the hook ② up or down slightly to adjust its position.

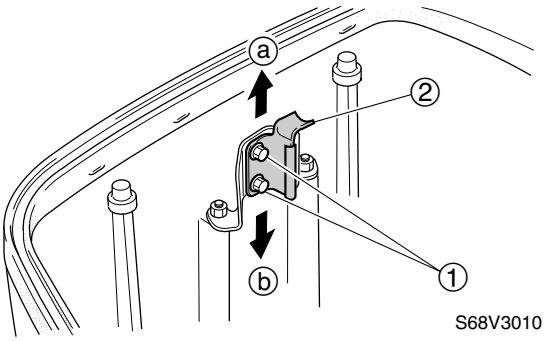

S68V3010

NOTE:

- To loosen the fitting, move the hook ② in direction ⓐ.
- To tighten the fitting, move the hook ② in direction ⓑ.

7. Tighten the bolts ①.

8. Check the fitting again. Repeat the steps 5–7 if necessary.

Fuel system

Checking the fuel joint and fuel hoses (fuel tank-to-fuel injector)

1. Remove the flywheel magnet cover and intake manifold.

NOTE:

See the exploded diagram (5-14 and 4-11).

2. Check the fuel hose connections from the fuel tank to the outboard motor for leakage and kinked. Also, check the fuel joint ①, primer pump ② and fuel hose joint ③.

3. Check the low-pressure fuel hose connections for leakage and kinked. Also, check the fuel filter assembly ④, fuel pump ⑤, strainer ⑥ and fuel cooler ⑦.

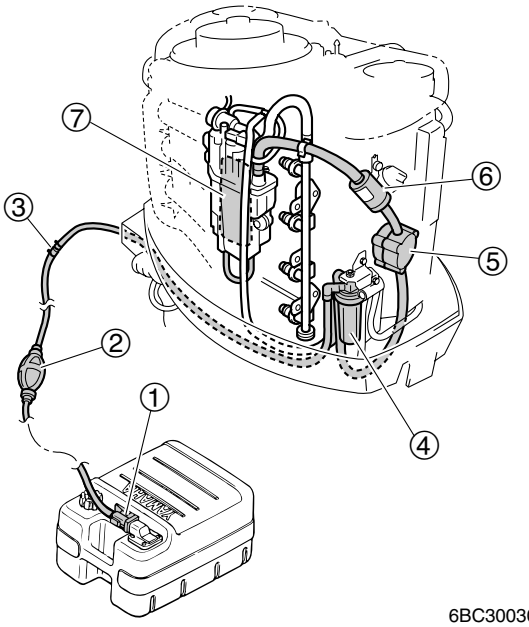

6BC30030

NOTE:

For further checking of each part, refer to the applicable checking procedure in chapter 4.

4. Check the high-pressure fuel hose connections for leakage and kinked. Also, check the vapor separator ⑧, fuel rail ⑨, fuel injector ⑩ and pressure regulator ⑪.

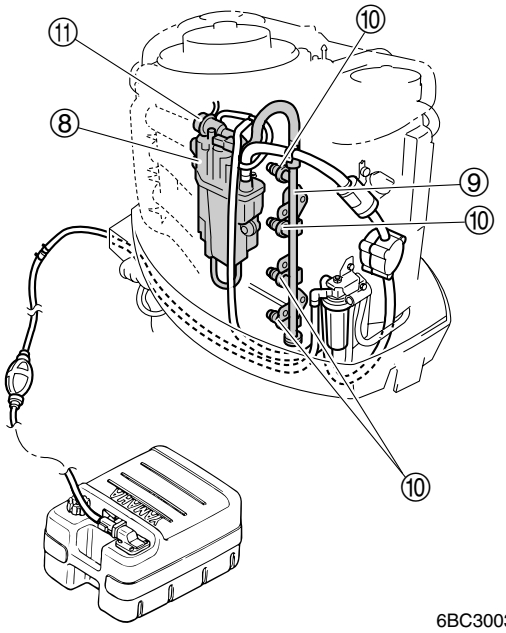

NOTE:
For further checking of each part, refer to the applicable checking procedure in chapter 4.

5. Install the intake manifold and flywheel magnet cover.

Checking the fuel filter

1. Remove the plastic tie ① from the water detection switch lead ②, and then disconnect the water detection switch coupler ③. Then remove the fuel filter cup assembly ④.

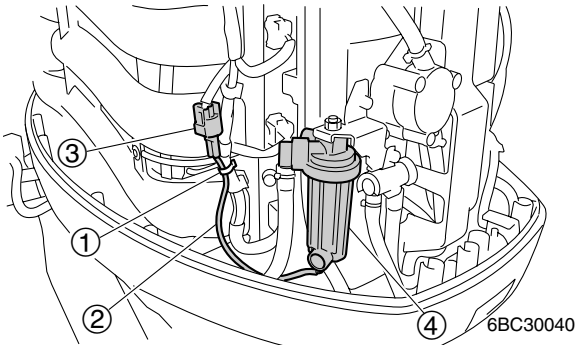

NOTE:
- Do not twist the water detection switch lead ② when removing the fuel filter cup assembly ④.
- Be sure not to spill any fuel when removing the fuel filter cup assembly ④.

2. Check the fuel filter element ⑤. Replace the fuel filter element if there is dirt or residue.

3. Check the fuel filter cup assembly ④. Clean with straight gasoline if there are foreign substance or replace if cracked.

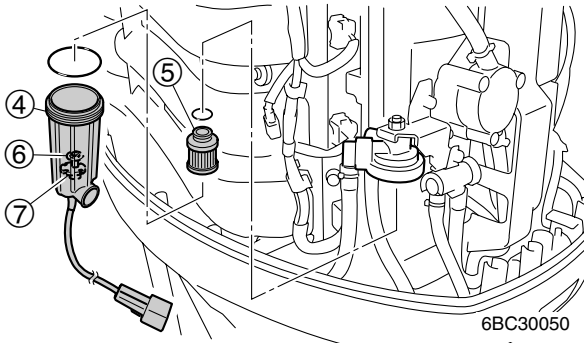

NOTE:
- When cleaning the fuel filter cup assembly, be sure not to remove the clip ⑥ and float ⑦, otherwise the water detection switch may be damaged.
- To check the fuel filter cup assembly for leakage, see “Checking the fuel filter assembly” (4-19).
- Check the water detection switch each time the fuel filter is checked.
- To check the water detection switch, see “Checking the water detection switch” (8-50).

4. Install the fuel filter cup assembly ④.

NOTE:
Do not twist the water detection switch lead ② when installing the fuel filter cup assembly ④.

5. Connect the water detection switch coupler ③, and then fasten the water detection switch lead ② with the plastic tie ①.

Draining the fuel

1. Reduce the fuel pressure.

NOTE:
To reduce the fuel pressure, see “Reducing the fuel pressure” (4-7).

2. Remove the cap ①.

3. Cover the check valve ⓐ of the vapor separator with a rag, and then press in the check valve as shown.

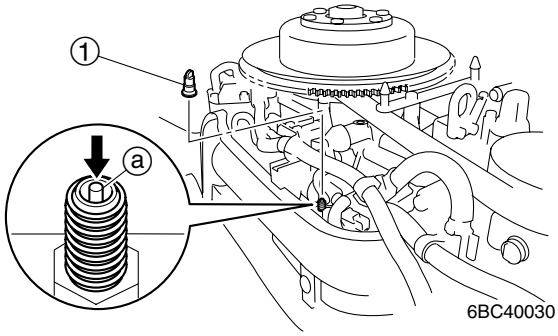

4. Remove the vapor separator drain hose ② from the intake manifold.

5. Place a drain pan under the vapor separator drain hose ②, and then loosen the vapor separator drain screw ③ and let the fuel drain completely.

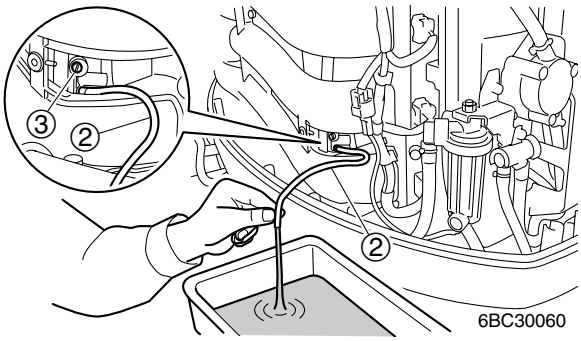

⚠WARNING

Reduce the fuel pressure before loosening the vapor separator drain screw, otherwise pressurized fuel could spray out and may result in serious injury.

6. Tighten the vapor separator drain screw ③.

	Vapor separator drain screw ③: 1.5 N·m (0.15 kgf·m, 1.1 ft·lb)

7. Install the vapor separator drain hose ② and cap ① to the original position.

Power unit

Checking the engine oil

1. Place the outboard motor in an upright position.

2. Remove the oil dipstick, wipe it clean, and then completely insert it back into the dipstick hole.

3. Remove the oil dipstick again to check the oil level and to check the oil for discoloration and its viscosity.

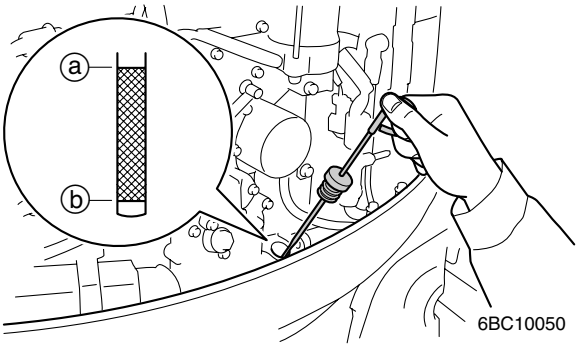

NOTE:
- If oil appears milky or dirty, find the cause and repair it before changing the oil.
- If the engine oil is below the minimum level mark ⓑ, add sufficient oil until the level is between ⓐ and ⓑ.

Changing the engine oil

1. Start the engine, warm it up, and then turn it off.

2. Remove the oil dipstick and oil filler cap ①.

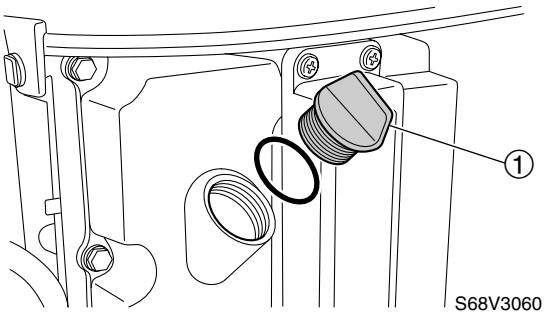

3. Place a drain pan under the drain hole, and then remove the engine oil drain bolt ② and let the oil drain completely.

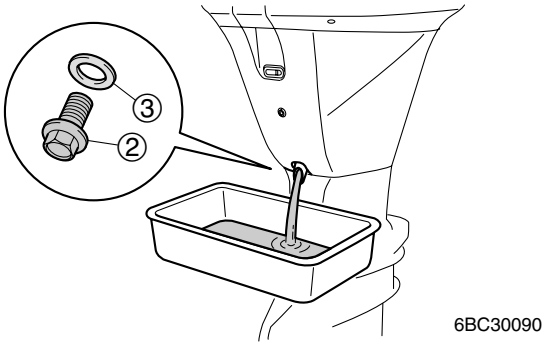

NOTE:
- Be sure to clean up any oil spills.
- When using an oil changer to change the engine oil, insert the oil changer hose into the oil dipstick hole.

4. Install the new gasket ③ and engine oil drain bolt ②, and then tighten it to the specified torque.

	Engine oil drain bolt ②: 27 N·m (2.7 kgf·m, 19.9 ft·lb)

5. Pour the specified amount of the recommended engine oil into the oil filler hole.

	Recommended engine oil: 4-stroke motor oil API: SE, SF, SG, SH, SJ or SL SAE: 5W-30, 10W-30 or 10W-40 Engine oil quantity: Without oil filter replacement: 4.3 L (4.55 US qt, 3.78 Imp qt)

6. Install the oil filler cap and oil dipstick, and then start the engine to warm it up.

7. Turn the engine off, wait a few minutes, and then check the oil level and that there is no oil leakage. If the oil level is low, add engine oil to the correct level.

Replacing the oil filter

1. Drain the engine oil.

2. Place a rag under the oil filter, and then remove the oil filter using a 64 mm (2.5 in) oil filter wrench ①.

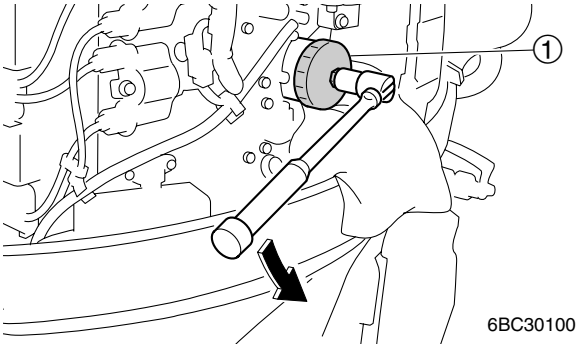

NOTE:
- Wait more than 5 minutes after turning the engine off to replace the oil filter.
- Be sure to clean up any oil spills.

	Oil filter wrench ①: 90890-01426

3. Apply a thin coat of engine oil to the O-ring of a new oil filter.

4. Install the oil filter, and then tighten it to the specified torque using a 64 mm (2.5 in) oil filter wrench ①.

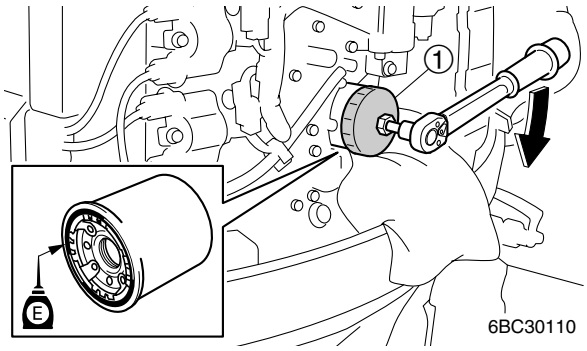

Oil filter:
18 N·m (1.8 kgf·m, 13.3 ft·lb)

5. Pour the specified amount of the recommended engine oil into the oil filler hole.

Recommended engine oil:
4-stroke motor oil
API: SE, SF, SG, SH, SJ or SL
SAE: 5W-30, 10W-30 or 10W-40
Engine oil quantity:
With oil filter replacement:
4.5 L (4.76 US qt, 3.96 Imp qt)

6. Install the oil filler cap and oil dipstick, and then start the engine to warm it up.

7. Turn the engine off, wait a few minutes, and then check the oil level and that there is no oil leakage. If the oil level is low, add engine oil to the correct level.

Checking the timing belt

CAUTION:

Do not turn the flywheel magnet counter-clockwise, otherwise the water pump impeller may be damaged.

1. Remove the flywheel magnet cover.

2. While turning the flywheel magnet clockwise, check the interior ⓐ and the exterior ⓑ of the timing belt. Replace the timing belt if cracked, damaged or worn.

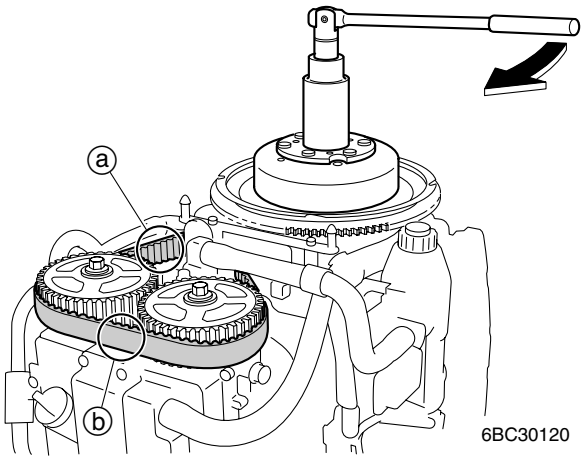

NOTE:
To replace the timing belt, see “Replacing the timing belt” (5-11).

Checking the spark plug

1. Remove the spark plug wire cover.

2. Disconnect the spark plug wires and remove the spark plugs.

3. Clean the electrodes ① with a spark plug cleaner or wire brush. Replace the spark plug if necessary.

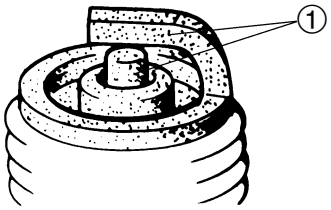

6B430025

NOTE:
Repeat the steps 3–5 for each spark plug.

4. Check the spark plug. Replace if the electrodes are eroded, there is excessive carbon or other deposits, or the gasket is damaged.

5. Check the spark plug gap ⓐ. Replace the spark plug if out of specification.

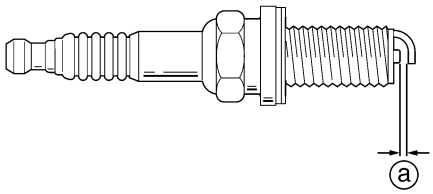

6BC30130

Specified spark plug:
LFR5A-11 (NGK)
Spark plug gap ⓐ:
1.0–1.1 mm (0.039–0.043 in)

6. Install the spark plugs, tighten them temporarily, and then tighten them to the specified torque using a spark plug wrench.

Spark plug:
25 N·m (2.5 kgf·m, 18.4 ft·lb)

7. Connect the spark plug wires, and then install the spark plug wire cover.

Spark plug wire cover screw:
4 N·m (0.4 kgf·m, 3.0 ft·lb)

Checking the thermostat

1. Remove the flywheel magnet cover.

2. Remove the plastic tie, and then disconnect the cooling water hose ①. Then remove the thermostat cover ② and thermostat ③.

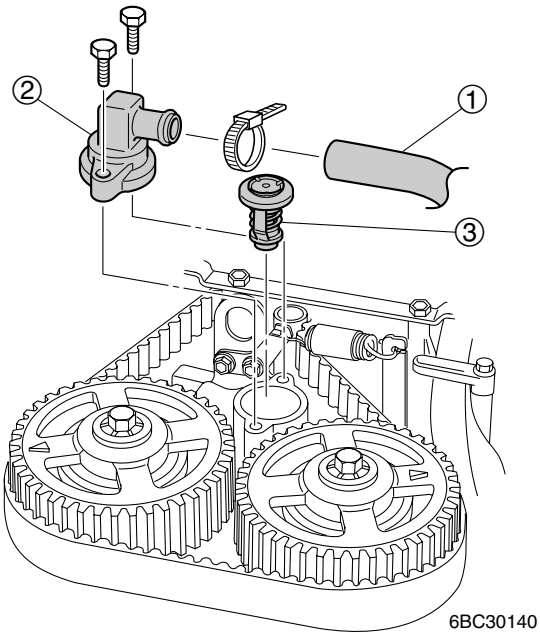

6BC30140

3. Suspend the thermostat ③ in a container of water.

4. Place a thermometer in the water and slowly heat the water.

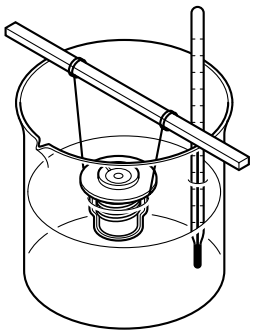

6B430060

5. Measure the thermostat valve opening ⓐ at the specified water temperatures. Replace the thermostat if out of specification.

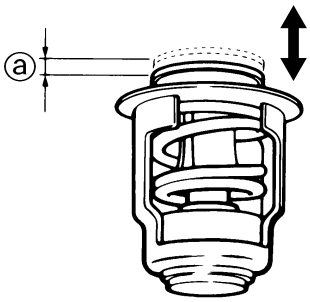

6B430070

Water temperature	Valve opening
58–62 °C (136–144°F)	0.05 mm (0.002 in) (valve begins to open)
above 70 °C (158 °F)	more than 4.3 mm (0.17 in)

6. Install the thermostat and thermostat cover, and then connect the cooling water hose. Then fasten it with the plastic tie.

7. Install the flywheel magnet cover.

Checking the cooling water passage

1. Check the cooling water inlet covers ① and cooling water inlet. Clean if clogged.

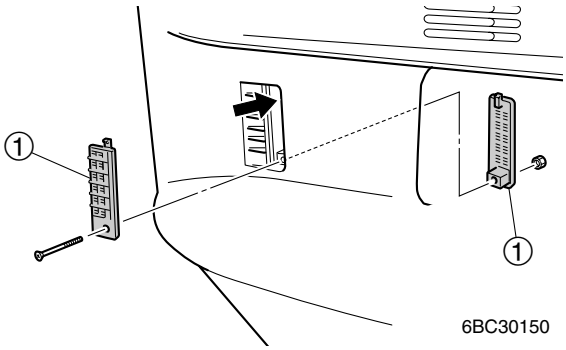

6BC30150

2. Place the lower unit in water, and then start the engine.

3. Check for water flow at the cooling water pilot hole. If there is no water flow, check the cooling water passages inside the outboard motor.

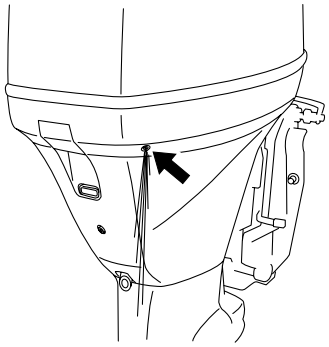

6BC3019A

Control system

Checking the throttle system

1. Set the throttle grip to the fully-closed position. (tiller handle model)
   Set the remote control lever to the fully-closed position. (remote control model)

2. Check that the throttle lever ① on the throttle body assembly contacts ⓐ the fully-closed stopper ②.

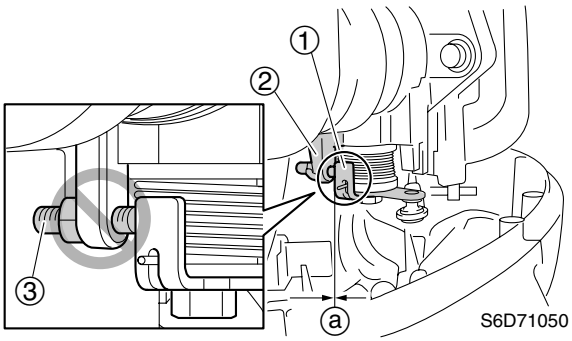

S6D71050

CAUTION:

Do not turn the throttle stop screw ③.

3. Set the throttle grip to the fully-opened position. (tiller handle model)
   Set the remote control lever to the fully-opened position. (remote control model)

4. Check that the gap ⓑ between the throttle lever ① and the fully-opened stopper ④ is less than 5 mm (0.22 in).

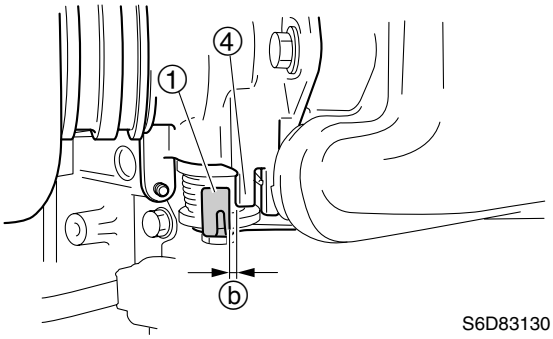

NOTE:
As a result of checking in steps 1–4, if adjustment of the throttle system is necessary, adjust the throttle system with to the following procedure.

5. Remove the clip ⑤, and then disconnect the throttle cable joint ⑥.

6. Disconnect the throttle link rod ⑦ from the throttle body assembly and throttle control lever.

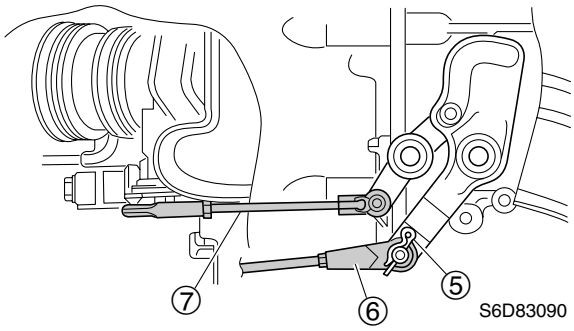

7. Remove the intake manifold with throttle body assembly.

NOTE:
- To remove the intake manifold and throttle body assembly, see “Removing the intake manifold” (4-14).
- To disconnect the quick connector, see “Disconnect the quick connector” (4-7).

8. Push the accelerator cam ⑧ in direction ⓒ, and then check that it is returned in direction ⓓ by the spring force.
   Then check that the stopper ⑨ of the accelerator cam contacts ⓔ the fully-closed stopper ⑩ of the cylinder block.
   Also, check that the accelerator cam roller ⑪ of the throttle control lever ⑫ contacts ⓕ the side of the accelerator cam.
   Check the accelerator cam, spring and throttle control lever, if there is no contact at the above two positions.

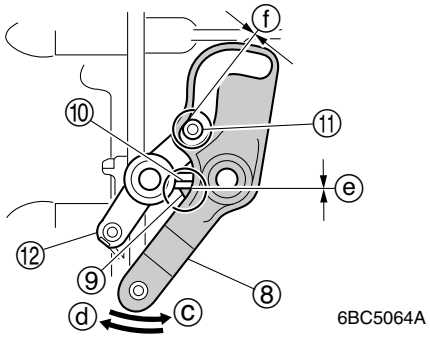

NOTE:
To check the accelerator cam, spring and throttle control lever, see “Installing the throttle link” (4-14).

9. Adjust the throttle link rod length ⓖ if out of specification.

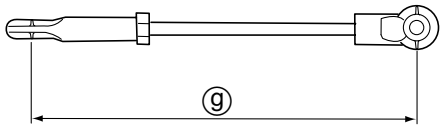

6BC30190

Length ⓖ (reference data):
124.5 mm (4.9 in)

10. Install the intake manifold with throttle body assembly.

NOTE:
To install the intake manifold and throttle body assembly, see “Installing the intake manifold” (4-15).

11. Adjust the position of the throttle cable joint ⑥ until its hole is aligned with the set pin ⑬ on the accelerator cam.
Connect the throttle cable ⑭, and then tighten the lock nut ⑮. Then install the clip ⑤.

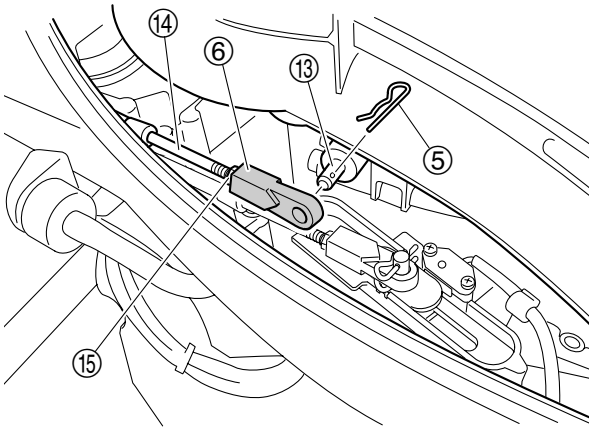

6BC30430

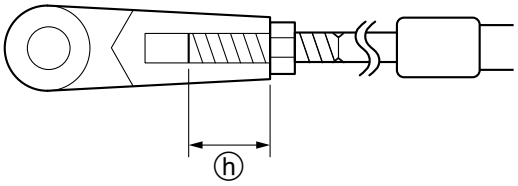

S6AG1090

WARNING

The throttle cable joint must be screwed in a minimum of 8.0 mm (0.31 in) ⓗ.

NOTE:
Pull the throttle cable ⑭ towards the engine to remove any free play in the cable before connecting the throttle cable joint ⑥.

12. Install the throttle link rod ⑦ to the throttle control lever and throttle lever ① on the throttle body assembly.
Then set the throttle to the fully-closed position, and then check that the throttle lever ① contacts ⓐ the fully-closed stopper ②.
Also set the throttle to the fully-opened position, and then check that the gap between the throttle lever ① and fully-opened stopper is less than 5 mm (0.22 in).
Adjust them to modify the throttle link rod length ⓖ, if above two position are incorrect.

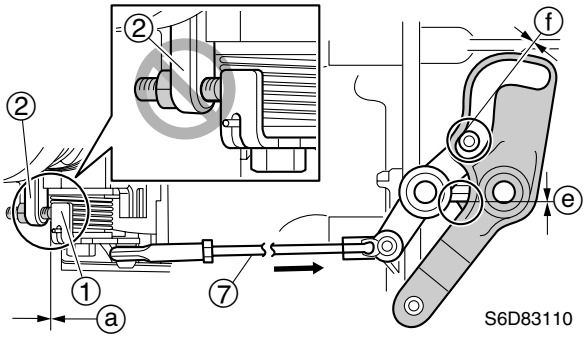

S6D83110

NOTE:
For checking the fully-closed and fully-opened positions of the throttle, refer to steps 2 and 4.

13. If necessary, repeat the steps 5–12.

NOTE:
If the throttle system is adjusted, be sure to check the TPS output voltage, see “Checking the TPS” (8-38).

Checking the gear shift system

1. Check that the gear shift operates smoothly when the shift lever is shifted from the “N” to “F” or “R” position. (tiller handle model)
   Check that the gear shift operates smoothly when the remote control lever is shifted from the “N” to “F” or “R” position. (remote control model)

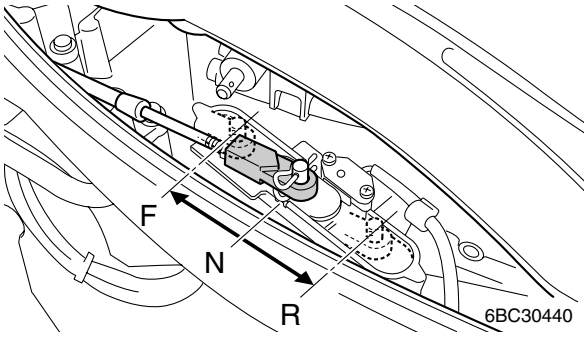

2. Set the gear shift to the “N” position.

3. Remove the clip ①, and then disconnect the shift cable joint ②.

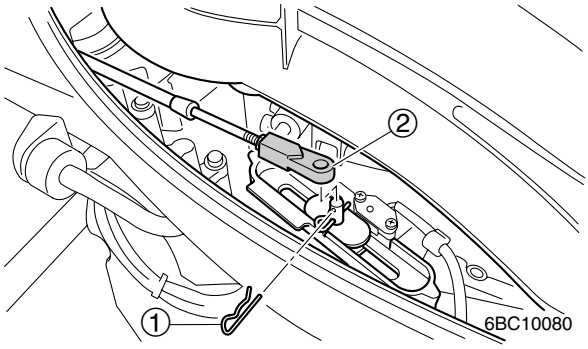

4. Align the alignment mark ⓐ on the bushing with alignment mark ⓑ on the bracket.

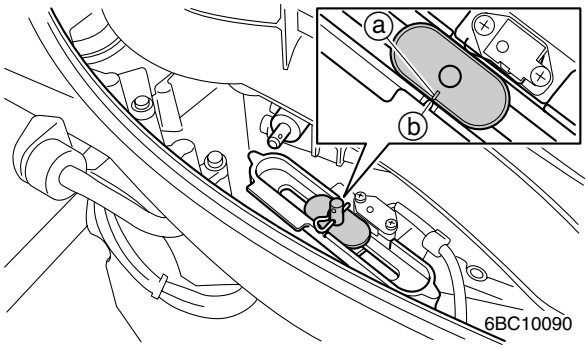

5. Adjust the position of the shift cable joint ② until its hole is aligned with the set pin ③. Connect the shift cable joint ② to the set pin ③, and then tighten the locknut ④. Then install the clip ①.

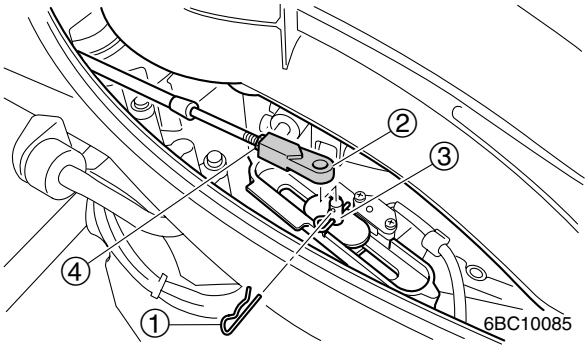

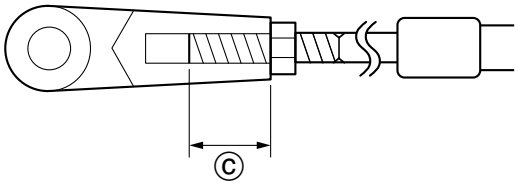

S6AG1090

⚠WARNING

The shift cable joint must be screwed in a minimum of 8.0 mm (0.31 in) ⓒ.

6. Check the gear shift operation. If necessary, repeat the steps 1–5.

NOTE:

Be sure to check the shift position switch after adjusting the gear shift system, see “Checking the shift position switch” (8-47).

Checking the engine idle speed

1. Start the engine and warm it up.

NOTE:
After the warm up control is finished and the engine idle speed is stabilized, check the engine idle speed.

2. Attach the special service tool ① to spark plug wire #1 ②, and then check the engine idle speed.

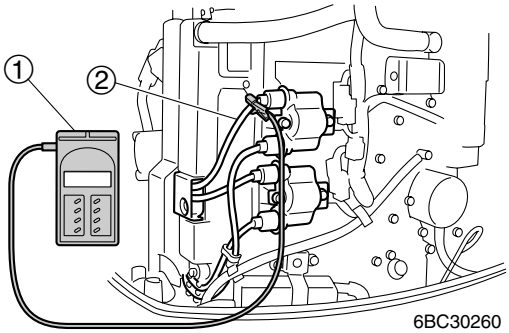

	Digital tachometer ①: 90890-06760
	Engine idle speed: 700 ± 50 r/min

Bracket unit

Checking the steering system (tiller handle model)

NOTE:
Lubricate the swivel bracket before checking the steering system.

1. Move the steering lock lever ① to the position ⓐ and check that the steering is locked.
   Move the steering lock lever ① to the position ⓑ and check that the steering operates smoothly.

2. Adjust the friction adjusting nut ② until steering operation works properly.

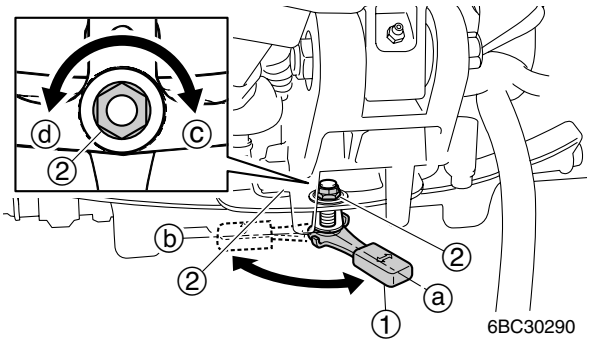

NOTE:
- Tighten or loosen the friction adjusting nut at the steering lock lever in the position ⓐ.
- To increase the friction, tighten ⓒ the friction adjusting nut ②.
- To decrease the friction, loosen ⓓ the friction adjusting nut ②.
- If it is necessary to disassemble the friction plate assembly, see the exploded diagram (7-5).

Checking the tilt system

1. Fully tilt the outboard motor up and down a few times and check the entire tilt range for smooth operation. Check the hydro tilt assembly if necessary.

NOTE:

- To operate the tilt system, see “Checking the tilt operation” (1-24).
- If it is necessary to remove the hydro tilt assembly, see “Removing the hydro tilt assembly” (7-34).
- Replace the hydro tilt assembly if does not operate smoothly.

Lower unit

Checking the gear oil

1. Fully tilt the outboard motor down.

2. Remove the gear oil check screw ①, and then check the gear oil level in the lower case. Also, check the oil for discoloration and its viscosity.

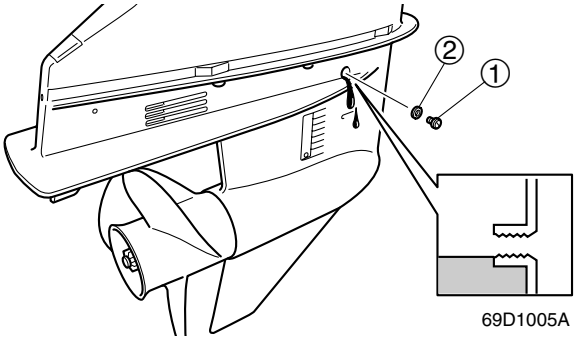

NOTE:

- If the oil is at the correct level, a small amount of oil should overflow out of the check hole when the gear oil check screw is removed.
- If oil appears milky or dirty, find the cause and repair it before changing the oil.
- If necessary, add sufficient gear oil of the recommended type until it overflows out of the check hole.

Recommended gear oil:
Hypoid gear oil
API: GL-4
SAE: 90

3. Install the new gasket ② and gear oil check screw ①, and then tighten it to the specified torque.

Gear oil check screw ①:
9 N·m (0.9 kgf·m, 6.6 ft·lb)

Changing the gear oil

1. Tilt the outboard motor so that the gear oil drain hole is at the lowest point possible.

2. Place a drain pan under the drain hole, remove the gear oil drain screw ①, and then remove the gear oil check screw ② and let the oil drain completely.

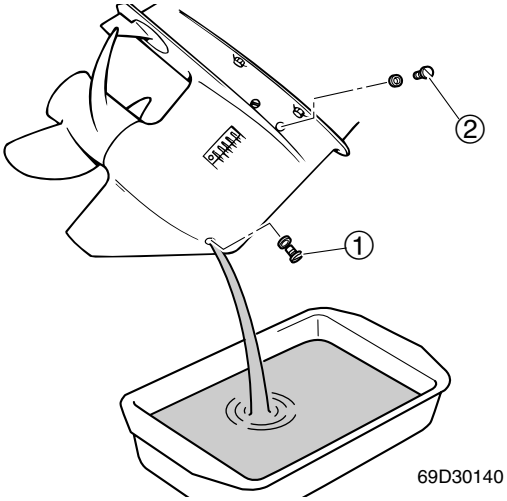

3. Check the oil for metal, discoloration and its viscosity. Check the internal parts of the lower unit if necessary.

4. Fully tilt the outboard motor down.

3

5. Insert a gear oil pump or gear oil tube into the drain hole and slowly fill the gear oil until oil flows out of the check hole and no air bubbles are visible.

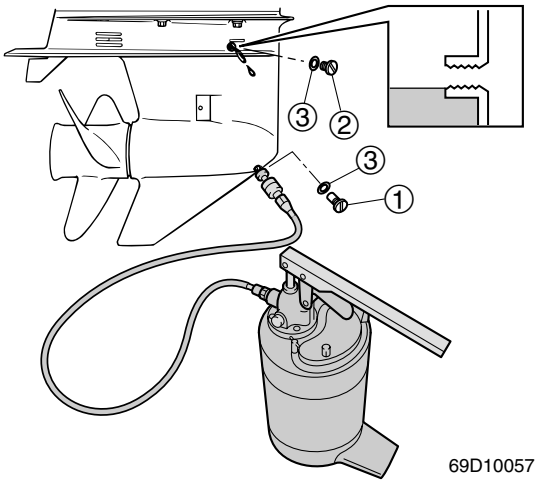

Recommended gear oil:
Hypoid gear oil
API: GL-4
SAE: 90
Gear oil quantity:
760 cm³
(25.7 US oz, 26.8 Imp oz)

6. Install the new gaskets ③, gear oil check screw ② and quickly install the gear oil drain screw ①, and then tighten them to the specified torque.

Gear oil check screw ①:
Gear oil drain screw ②:
9 N·m (0.9 kgf·m, 6.6 ft·lb)

Checking the lower unit for air leakage

1. Remove the gear oil check screw ①, and then install the special service tool ②.

2. Apply the specified pressure to check that the pressure is maintained in the lower unit for at least 10 seconds.

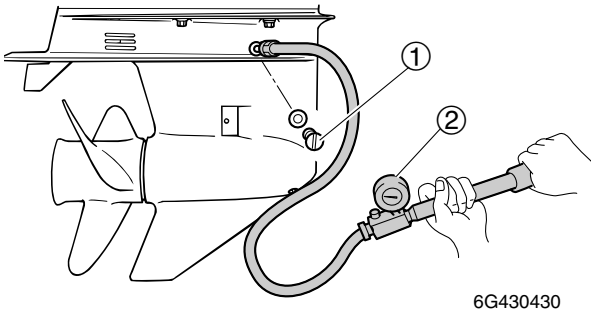

CAUTION:

Do not apply over specified pressure to the lower unit, otherwise the oil seals could be damaged.

NOTE:

Cover the check hole with a rag when removing the special service tool from the lower unit.

Leakage tester ②: 90890-06840

Lower unit holding pressure:
70 kPa (0.7 kgf/cm², 10 psi)

3. If the specified pressure cannot be maintained, check the lower case, propeller shaft, drive shaft, shift rod oil seal, propeller shaft housing, oil seals, O-rings or gaskets. If necessary, disassemble the lower unit.

Checking the propeller

1. Check the propeller blades and splines. Replace the propeller if cracked, damaged or worn.

NOTE:
When replacing the propeller, see “Propeller selection” (1-17) and select a propeller of the same size as originally installed.

General

Checking the anode

1. Check the anodes. Clean if there are scales, grease or oil.

2. Replace the anodes if excessively eroded. In addition, check the ground lead.

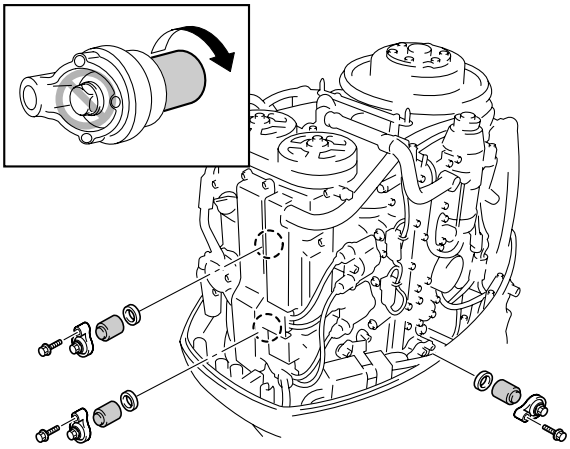

6BC30500

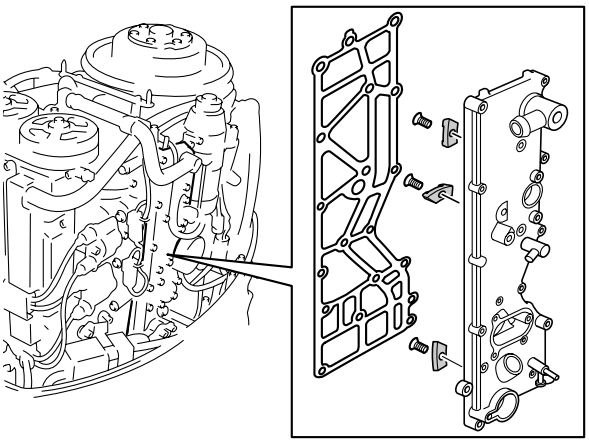

6BC30510

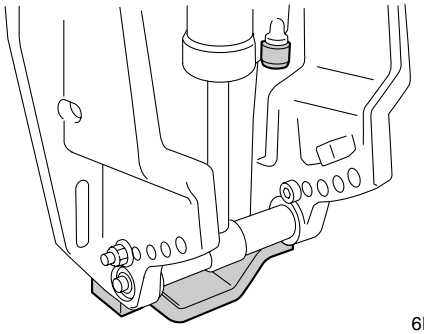

6BC30295

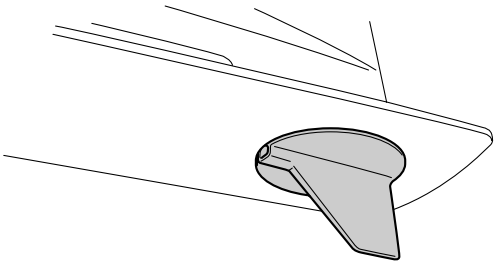

6BC30340

CAUTION:
Do not apply oil, grease or paint to the anodes, otherwise they will be ineffective.

NOTE:
If it is necessary to disassemble the outboard motor to check an anode, refer to the applicable disassembly procedure in this manual.

3

Checking the battery

1. Check the battery electrolyte level. If the level is at or below the minimum level mark ⓐ, add distilled water until the level is between the maximum and minimum level marks.

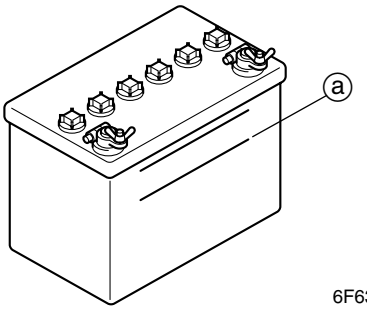

2. Check the specific gravity of the electrolyte. Fully charge the battery if below the specification.

⚠WARNING

Battery electrolyte is dangerous; it contains sulfuric acid which is poisonous and highly caustic.
Always follow these preventive measures:
- **Avoid bodily contact with electrolyte as it can cause severe burns or permanent eye injury.**
- **Wear protective eye gear when handling or working near batteries.**

Antidote (EXTERNAL):
- **SKIN – Wash with water.**
- **EYES – Flush with water for 15 minutes and get immediate medical attention.**

Antidote (INTERNAL):
- **Drink large quantities of water or milk followed with milk of magnesia, beaten egg, or vegetable oil. Get immediate medical attention.**

Batteries generate explosive, hydrogen gas. Always follow these preventive measures:
- **Charge batteries in a well-ventilated area.**
- **Keep batteries away from fire, sparks, or open flames (e.g., welding equipment, lighted cigarettes).**
- **DO NOT SMOKE when charging or handling batteries.**

KEEP BATTERIES AND ELECTROLYTE OUT OF REACH OF CHILDREN.

NOTE:
- Batteries vary per manufacturer. The procedures mentioned in this manual may not always apply, therefore, consult the instruction manual of the battery.
- Disconnect the negative battery cable first, then the positive battery cable.

Electrolyte specific gravity:
1.280 at 20 °C (68 °F)

Lubricating the outboard motor

1. Apply water resistant grease to the areas shown.

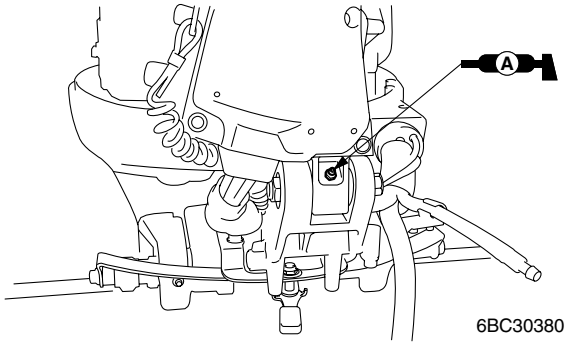

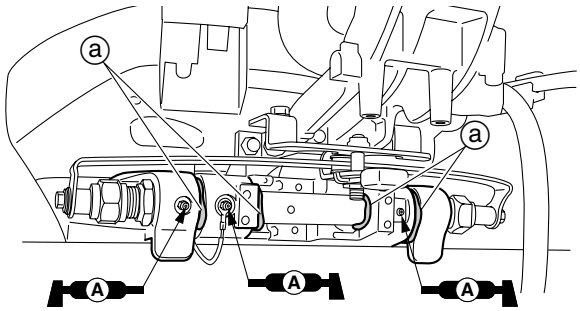

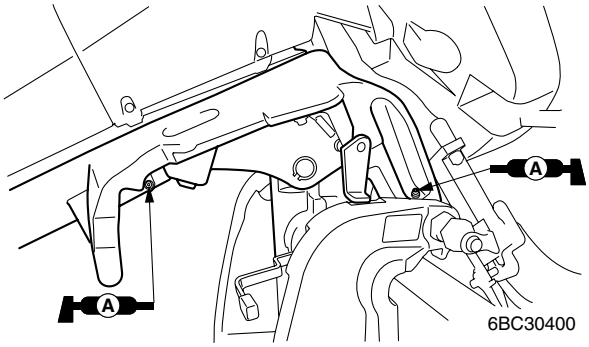

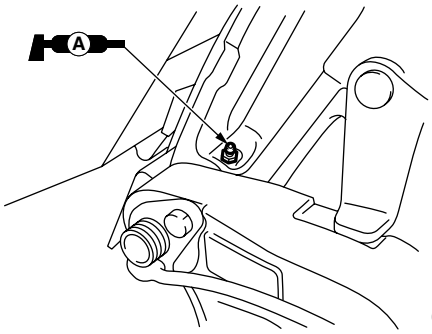

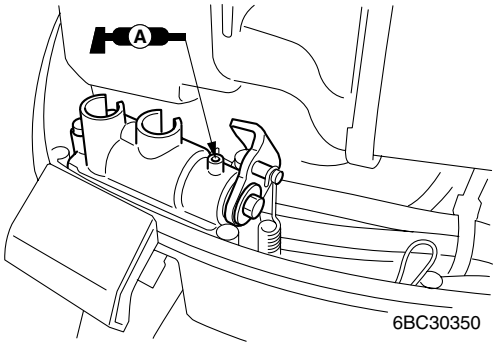

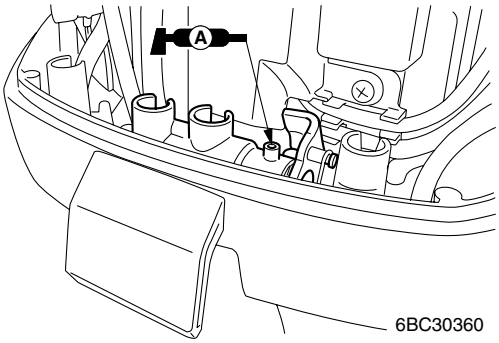

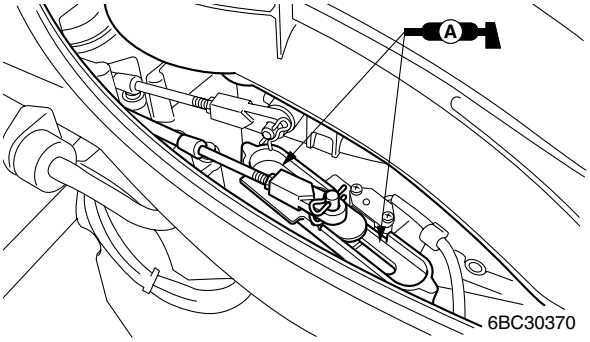

NOTE:
Apply grease until it flows from the bushings ⓐ.

2. Apply low temperature resistant grease to the areas shown.

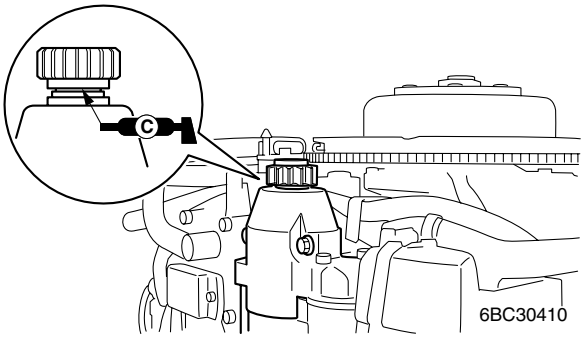

3. Apply corrosion resistant grease to the area shown.

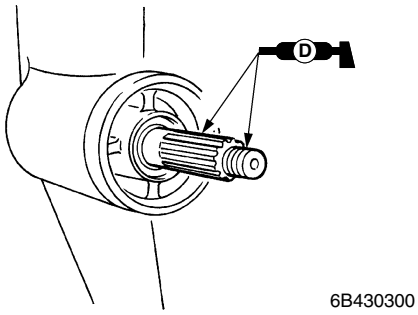

Fuel system

Hose routing 4-1
Fuel hose, blowby hose, vapor gas hose, vacuum hose, canister hose and cooling water hose 4-1

Fuel system 4-7
Reducing the fuel pressure 4-7
Disconnecting the quick connector 4-7
Measuring the fuel pressure 4-8
Checking the pressure regulator 4-9

Intake manifold and fuel injector 4-11
Throttle link 4-13
Removing the intake manifold 4-14
Checking the intake silencer 4-14
Checking the intake manifold 4-14
Installing the throttle link 4-14
Installing the intake manifold 4-15
Installing the fuel injector 4-15
Installing the throttle body assembly 4-16
Installing the intake silencer 4-16

Fuel filter and fuel pump 4-17
Checking the fuel filter assembly 4-19
Checking the fuel pump 4-20
Disassembling the fuel pump 4-20
Checking the diaphragm and valve 4-21
Assembling the fuel pump 4-21

Vapor separator 4-23
Removing the fuel hose clamp 4-26
Installing the fuel hose clamp 4-26
Disassembling the vapor separator 4-26
Checking the vapor separator 4-27
Assembling the vapor separator 4-27

Canister 4-28
Checking the canister 4-29
Checking the filter 4-29

Hose routing

Fuel hose, blowby hose, vapor gas hose, vacuum hose, canister hose and cooling water hose

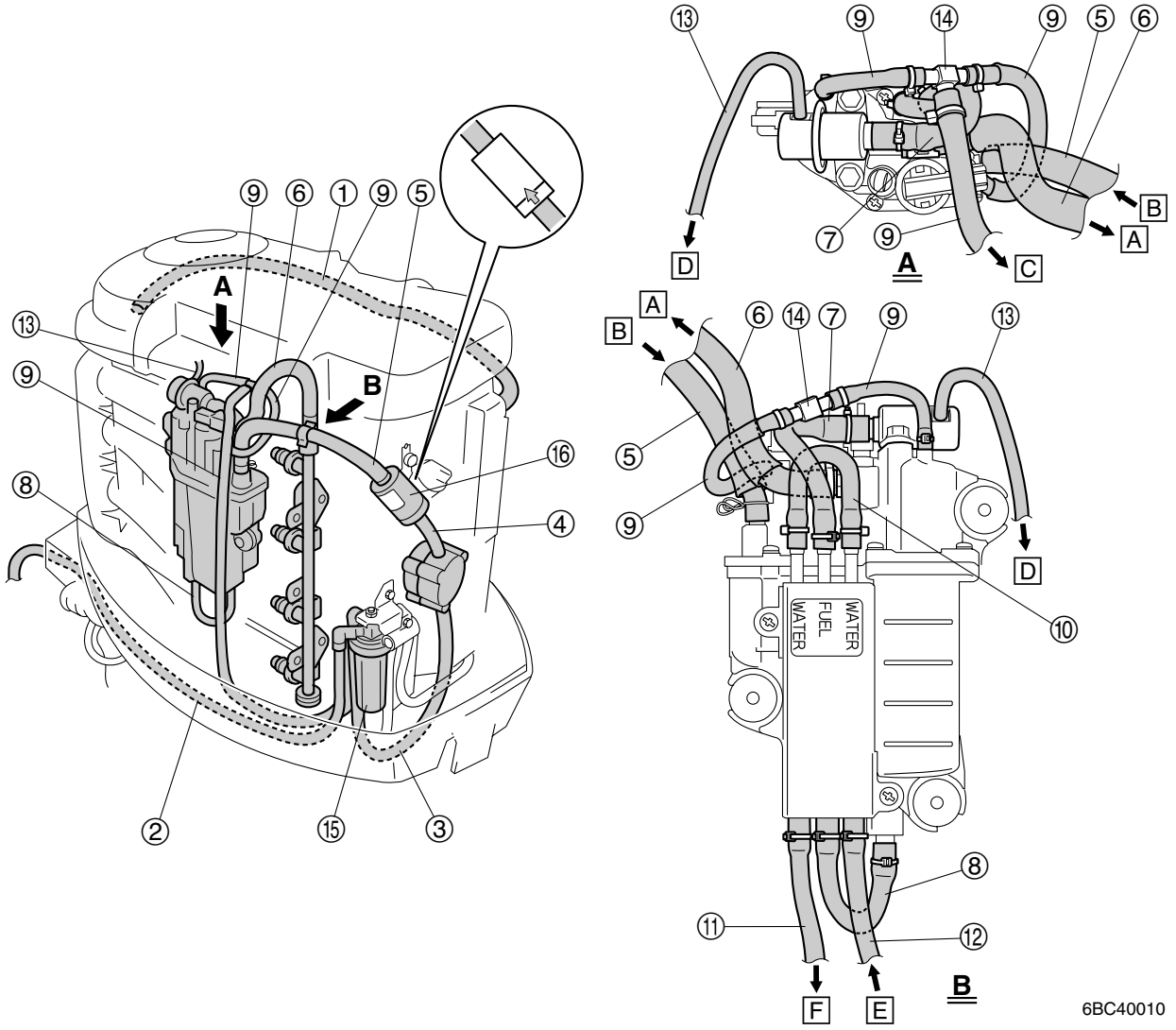

① Blowby hose (cylinder head cover-to-intake silencer)
② Fuel hose (primary pump-to-fuel filter assembly)
③ Fuel hose (fuel filter assembly-to-fuel pump)
④ Fuel hose (fuel pump-to-strainer)
⑤ Fuel hose (strainer-to-vapor separator)
⑥ High-pressure fuel hose (vapor separator-to-fuel rail)
⑦ Fuel hose (pressure regulator-to-fuel cooler)
⑧ Fuel hose (fuel cooler-to-vapor separator)
⑨ Vapor gas hose (vapor separator-to-joint-to-canister)
⑩ Cooling water hose (fuel cooler-to-fuel cooler)
⑪ Cooling water hose (430 mm: outlet side, fuel cooler-to-joint-to-pilot hole)
⑫ Cooling water hose (700 mm: inlet side, exhaust cover-to-fuel cooler)
⑬ Vacuum hose (pressure regulator-to-intake manifold)
⑭ Joint
⑮ Fuel filter assembly
⑯ Strainer

A To the fuel rail.
B From the strainer.
C To the canister.
D To the intake manifold.
E From the exhaust cover.
F To the joint-to-pilot hole.

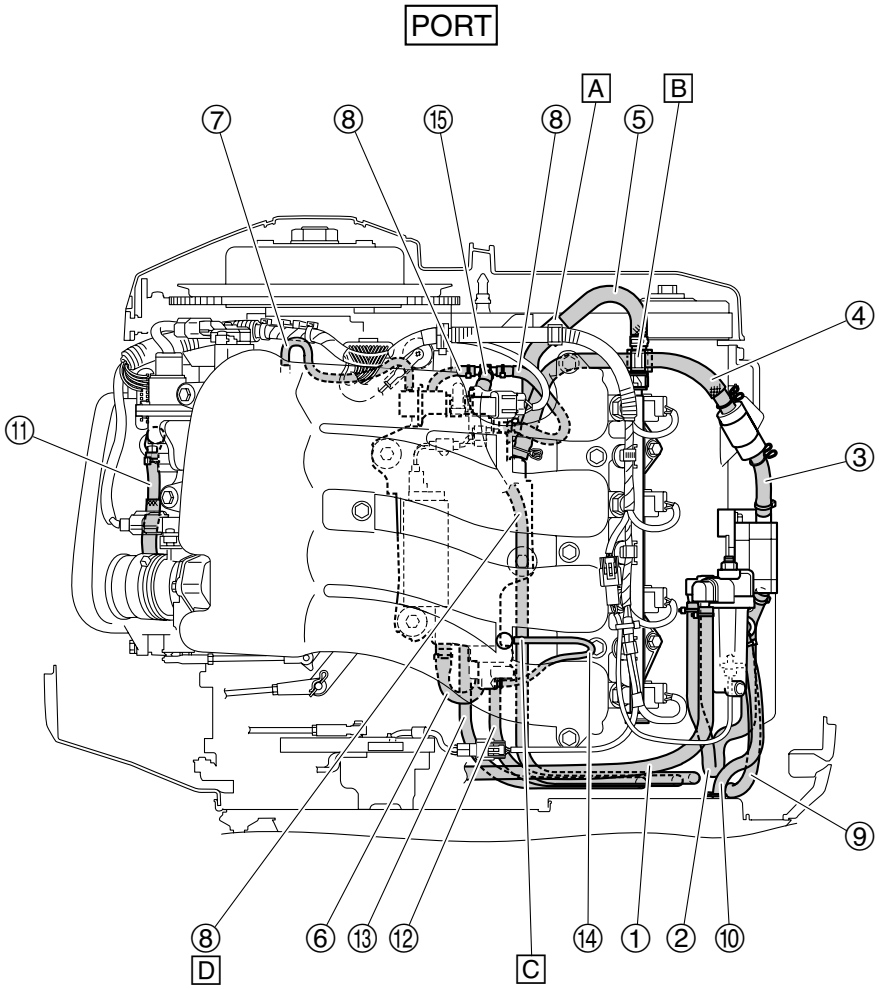

① Fuel hose (primary pump-to-fuel filter assembly)
② Fuel hose (fuel filter assembly-to-fuel pump)
③ Fuel hose (fuel pump-to-strainer)
④ Fuel hose (strainer-to-vapor separator)
⑤ High-pressure fuel hose (vapor separator-to-fuel rail)
⑥ Fuel hose (fuel cooler-to-vapor separator)
⑦ Vacuum hose (pressure regulator-to-intake manifold)
⑧ Vapor gas hose (vapor separator-to-joint-to-canister)
⑨ Canister hose (canister-to-filter)
⑩ Canister hose (filter-to-canister outlet)
⑪ Canister hose (canister-to-ISC)
⑫ Cooling water hose (430 mm: outlet side, fuel cooler-to-joint-to-pilot hole)
⑬ Cooling water hose (700 mm: inlet side, exhaust cover-to-fuel cooler)
⑭ Vapor separator drain hose
⑮ Joint

A Fasten the high-pressure fuel hose and wiring harness with the clamp. Be sure to fasten the wiring harness at the small diameter position of the clamp. The clamp opening must face downward.
B Fasten the quick connector and low-pressure fuel hose with the clamp. Be sure to fasten the low-pressure fuel hose at the small diameter position of the clamp.
C Connect the vapor separator drain hose end to the intake manifold.
D Hang the vapor gas hose on the high-pressure fuel pump coupler.

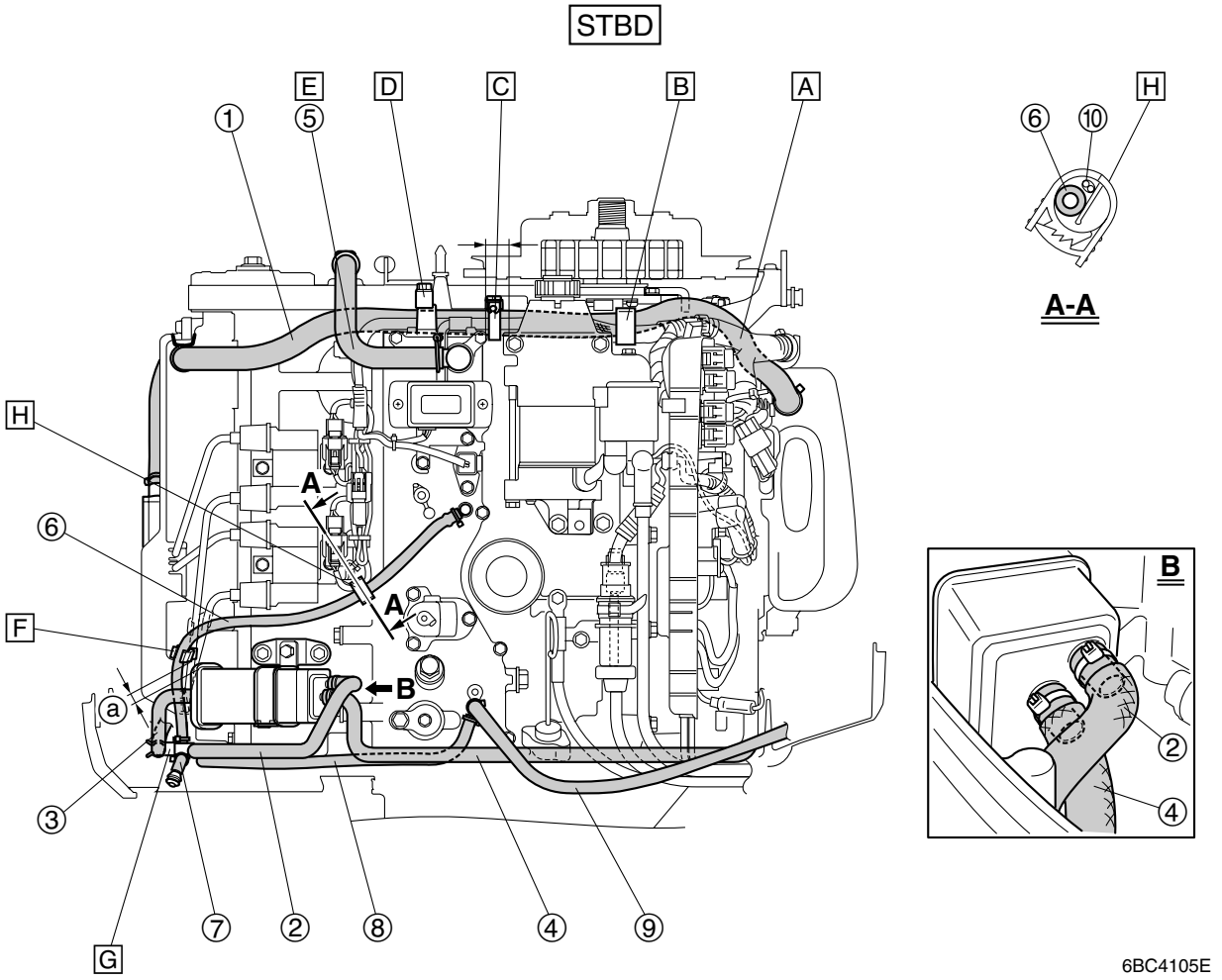

① Blowby hose (cylinder head cover-to-intake silencer)
② Vapor gas hose (vapor separator-to-joint-to-canister)
③ Canister hose (canister-to-filter)
④ Canister hose (canister-to-ISC)
⑤ Cooling water hose (thermostat cover-to-exhaust cover)
⑥ Cooling water hose (exhaust cover-to-joint-to-pilot hole)
⑦ Cooling water hose (joint-to-pilot hole)
⑧ Cooling water hose (700 mm: inlet side, exhaust cover-to-fuel cooler)
⑨ Flushing hose (exhaust cover-to-flushing hose joint adaptor)
⑩ Wiring harness

A Route the blowby hose to the inside of the wiring harness.
B Install the blowby hose on the holder, by placing the hose behind the wiring harness.
C Install the clamp between the boss and the starter motor. Then, fasten the wiring harness and the blowby hose with the clamp.
D Install the blowby hose on the holder, by placing the hose behind the wiring harness.
E Route the cooling water hose to the front of the wiring harness.
F Fasten the cooling water hose and spark plug wire #4 with the holder, making sure to align the holder with the mark on the hose. Separate the holder from the canister to have distance ⓐ (10 mm or more).
G Fasten the canister hose and the cooling water hose with the clamp.
H Fasten the wiring harness (to ignition coil) and cooling water hose with the clamp.

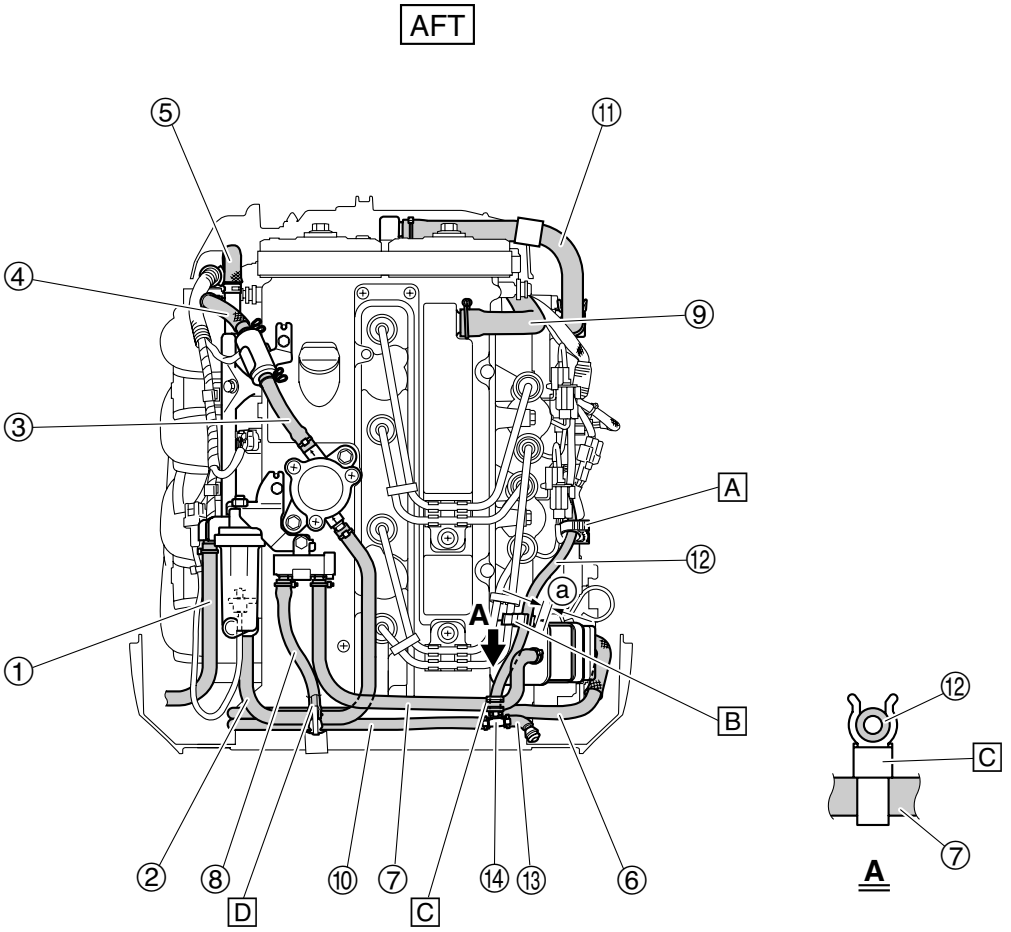

6BC4106E

① Fuel hose (primary pump-to-fuel filter assembly)
② Fuel hose (fuel filter assembly-to-fuel pump)
③ Fuel hose (fuel pump-to-strainer)
④ Fuel hose (strainer-to-vapor separator)
⑤ High-pressure fuel hose (vapor separator-to-fuel rail)
⑥ Vapor gas hose (vapor separator-to-joint-to-canister)
⑦ Canister hose (canister-to-filter)
⑧ Canister hose (filter-to-canister outlet)
⑨ Blowby hose (cylinder head cover-to-intake silencer)
⑩ Cooling water hose (430 mm: outlet side, fuel cooler-to-joint-to-pilot hole)
⑪ Cooling water hose (thermostat cover-to-exhaust cover)
⑫ Cooling water hose (exhaust cover-to-joint-to-pilot hole)
⑬ Cooling water hose (joint-to-pilot hole)
⑭ Joint

A Fasten the wiring harness (to ignition coil) and cooling water hose with the clamp.
B Fasten the cooling water hose and spark plug wire #4 with the holder, making sure to align the holder with the mark on the hose. Separate the holder from the canister to have distance ⓐ (10 mm or more).
C Fasten the canister hose and the cooling water hose with the clamp.
D Connect the canister hose to the atmospheric outlet.

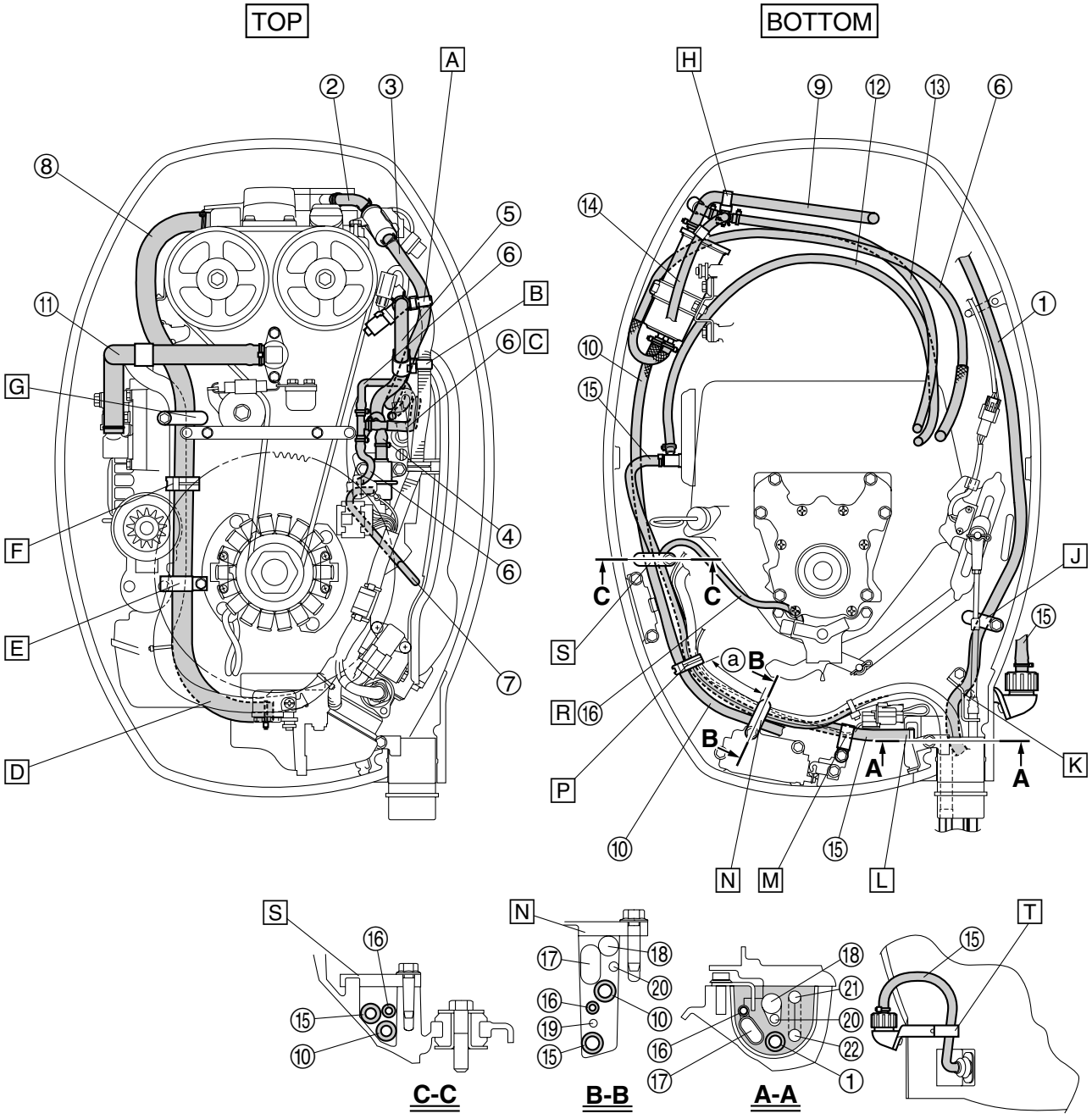

① Fuel hose (primary pump-to-fuel filter assembly)
② Fuel hose (fuel pump-to-strainer)
③ Fuel hose (strainer-to-vapor separator)
④ Fuel hose (pressure regulator-to-fuel cooler)
⑤ High-pressure fuel hose (vapor separator-to-fuel rail)
⑥ Vapor gas hose (vapor separator-to-joint-to-canister)
⑦ Vacuum hose (pressure regulator-to-intake manifold)
⑧ Blowby hose (cylinder head cover-to-intake silencer)
⑨ Canister hose (canister-to-filter)
⑩ Canister hose (canister-to-ISC)
⑪ Cooling water hose (thermostat cover-to-exhaust cover)

⑫ Cooling water hose (700 mm: inlet side, exhaust cover-to-fuel cooler)
⑬ Cooling water hose (430 mm: outlet side, fuel cooler-to-joint-to-pilot hole)
⑭ Cooling water hose (exhaust cover-to-joint-to-pilot hole)
⑮ Flushing hose (exhaust cover-to-flushing hose joint adaptor)
⑯ Speedometer hose
⑰ Battery cable
⑱ 10-pin main harness
⑲ YDIS communication lead
⑳ Warning indicator lead
㉑ Throttle cable
㉒ Shift cable

A Fasten the quick connector and low-pressure fuel hose with the clamp. Be sure to fasten the low-pressure fuel hose at the small diameter position of the clamp.
B Fasten the high-pressure fuel hose and wiring harness with the clamp. Be sure to fasten the wiring harness at the small diameter position of the clamp. The clamp opening must face downward.
C Hang the vapor gas hose on the high-pressure fuel pump coupler.
D Route the blowby hose to the inside of the wiring harness.
E Install the blowby hose on the holder, by placing the hose inside of the wiring harness.
F Install the clamp between the boss and the starter motor. Then, fasten the wiring harness and the blowby hose with the clamp.
G Install the blowby hose on the holder, by placing the hose inside of the wiring harness.
H Fasten the canister hose and the cooling water hose with the clamp.
J Pass the fuel hose through the plate.
K Install the fuel hose so that the hose passes under the cable holder and between the cable holder and bottom cowling boss.
L Pass the flushing hose under the bottom cowling by aligning the mark on the flushing hose with the grommet end.
M Pass the flushing hose and YDIS communication lead through the holder.
N Pass the battery cable, 10-pin main harness, YDIS communication lead, warning indicator lead, flushing hose, speedometer hose and canister hose through the plate.
P Bundle the battery cable, 10-pin main harness, YDIS communication lead, warning indicator lead, flushing hose, speedometer hose and canister hose at the position 50 to 80 mm (distance ⓐ) away from the plate with the clamp.
R Pass the speedometer hose between the oil pump boss and shift lever bolt not to pinch.
S Pass the canister hose, flushing hose and speedometer hose through the plate.
T Pass the flushing hose through the bracket.

Fuel system

Reducing the fuel pressure

WARNING

Always reduce the fuel pressure in the high-pressure fuel line before servicing the line. If the fuel pressure is not released, pressurized fuel could spray out.

1. Disconnect the high-pressure fuel pump coupler ①.

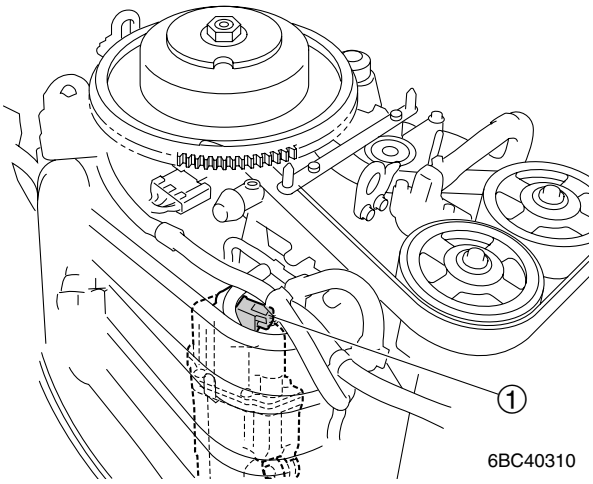

2. Start the engine.

NOTE:
- If the engine starts, it will stall after a few seconds.
- If the engine does not start, crank the engine 2 or 3 times.

3. After the engine stalls, crank the engine 2 or 3 times.

NOTE:
Make sure that the engine does not start, though it cranks.

4. Turn the engine start switch to “OFF”.

5. Connect the high-pressure fuel pump coupler ①.

NOTE:
To reduce the fuel pressure in the vapor separator, see “Draining the fuel” (3-5).

Disconnecting the quick connector

WARNING

- **If the quick connector is disconnected suddenly, pressurized fuel could spray out. Be sure to reduce the fuel pressure before disconnecting the quick connector.**
- **Always reduce the fuel pressure in the high-pressure fuel line before servicing the line. If the fuel pressure is not released, pressurized fuel could spray out.**

1. Reduce the fuel pressure.

NOTE:
To reduce the fuel pressure, see “Reducing the fuel pressure”.

2. Disconnect the quick connector ① from the fuel rail ②.

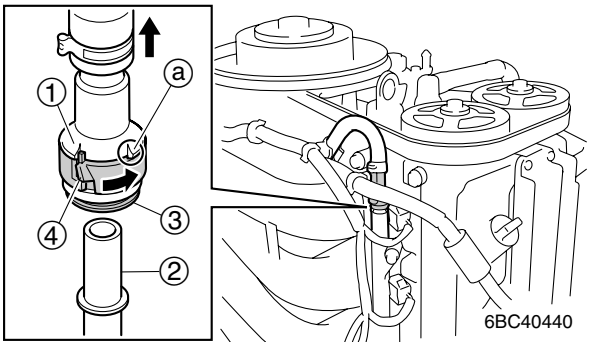

CAUTION:

- **When the quick connector disconnected, make sure to care the retainer ③ lost.**
- **Do not pull the quick connector tab ④ past the stopper position ⓐ, otherwise it could be damaged.**

NOTE:
- Wrap the quick connector with a rag.
- Pull the quick connector tab ④ to the stopper position ⓐ, and then pull the quick connector vertically upward.

Measuring the fuel pressure

1. Reduce the fuel pressure.

NOTE:
To reduce the fuel pressure, see “Reducing the fuel pressure” (4-7).

2. Disconnect the quick connector from the fuel rail.

NOTE:
To disconnect the quick connector, see “Disconnecting the quick connector” (4-7).

3. Connect the fuel pressure gauge adapter B ① between the quick connector and fuel rail.

4. Connect the fuel pressure gauge ② to the fuel pressure gauge adapter B ①.

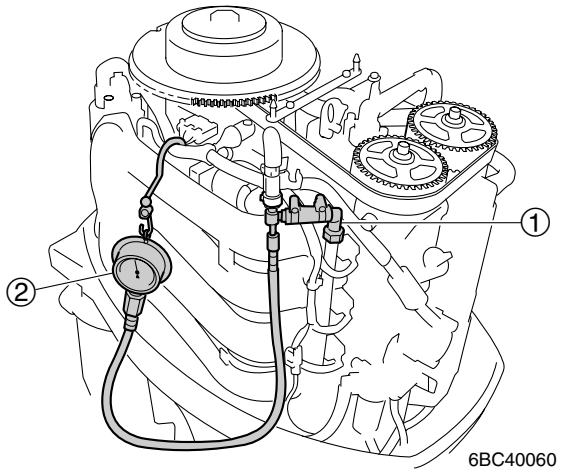

WARNING

- **Gently screw in the fuel pressure gauge until it is firmly connected to prevent fuel from leaking out.**
- **Before measuring the fuel pressure, make sure that the fuel pressure gauge drain screw is tightened securely.**
- **Do not loosen the fuel pressure gauge drain screw while measuring the fuel pressure, otherwise fuel can spray out.**

Fuel pressure gauge adapter B ①:
90890-06942
Fuel pressure gauge ②:
90890-06786

5. Turn the engine start switch to “ON”, and then measure the fuel pressure within 3 seconds.

NOTE:
The fuel pressure decreases 3 seconds after the engine start switch is turned to “ON”.

Fuel pressure (reference data):
300 kPa (3.0 kgf/cm^2, 43.5 psi)

6. Measure the fuel pressure 3 seconds after turning the engine start switch to “ON”.

Fuel pressure (reference data):
260 kPa (2.6 kgf/cm^2, 37.7 psi)

7. Start the engine, warm it up, and then measure the fuel pressure at engine idle speed. Check the high-pressure fuel pump, pressure regulator and high-pressure fuel line, if below specification.

Fuel pressure (reference data):
230 kPa (2.3 kgf/cm^2, 33.4 psi)
at engine idle speed

8. Turn the engine start switch to “OFF”.

9. Reduce the fuel pressure.

NOTE:
To reduce the fuel pressure, see “Reducing the fuel pressure” (4-7).

10. Disconnect the special service tools.

NOTE:
After disconnecting the fuel pressure gauge, loosen the drain screw to drain the remaining fuel.

11. Connect the quick connector.

Checking the pressure regulator

1. Reduce the fuel pressure.

NOTE:
To reduce the fuel pressure, see “Reducing the fuel pressure” (4-7).

2. Disconnect the quick connector from the fuel rail.

NOTE:
To disconnect the quick connector, see “Disconnecting the quick connector” (4-7).

3. Connect the fuel pressure gauge adapter B ① between the quick connector and fuel rail.

4. Connect the fuel pressure gauge ② to the fuel pressure gauge adapter B ①.

5. Disconnect the vacuum hose ③, and then connect the special service tools ④ to the pressure regulator.

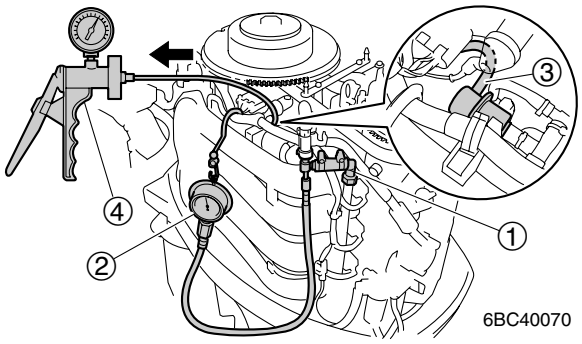

⚠WARNING

- **Gently screw in the fuel pressure gauge until it is firmly connected to prevent fuel from leaking out.**
- **Before measuring the fuel pressure, make sure that the fuel pressure gauge drain screw is tightened securely.**
- **Do not loosen the fuel pressure gauge drain screw while measuring the fuel pressure, otherwise fuel can spray out.**

Fuel pressure gauge adapter B ①:
90890-06942
Fuel pressure gauge ②:
90890-06786
Vacuum/pressure pump gauge set ④:
90890-06756

6. Start the engine, warm it up, and then measure the fuel pressure at engine idle.

NOTE:
Do not apply negative or positive pressure by using the vacuum/pressure pump gauge set in this step.

Fuel pressure (reference data):
300 kPa (3.0 kgf/cm^2, 43.5 psi)
at engine idle speed

7. Apply negative pressure gradually to the pressure regulator until the specified negative pressure is obtained, and check that the fuel pressure reduces gradually to the specified fuel pressure. Replace the pressure regulator, if the fuel pressure does not reduce.

Specified negative pressure:
70 kPa (0.7 kgf/cm^2, 10.0 psi)
Fuel pressure (reference data):
230 kPa (2.3 kgf/cm^2, 33.4 psi)
at engine idle speed

8. Turn the engine start switch to “OFF”.

9. Reduce the fuel pressure.

NOTE:
To reduce the fuel pressure, see “Reducing the fuel pressure” (4-7).

10. Disconnect the special service tools.

NOTE:
After disconnecting the fuel pressure gauge, loosen the drain screw to drain the remaining fuel.

11. Connect the vacuum hose and quick connector.

Intake manifold and fuel injector

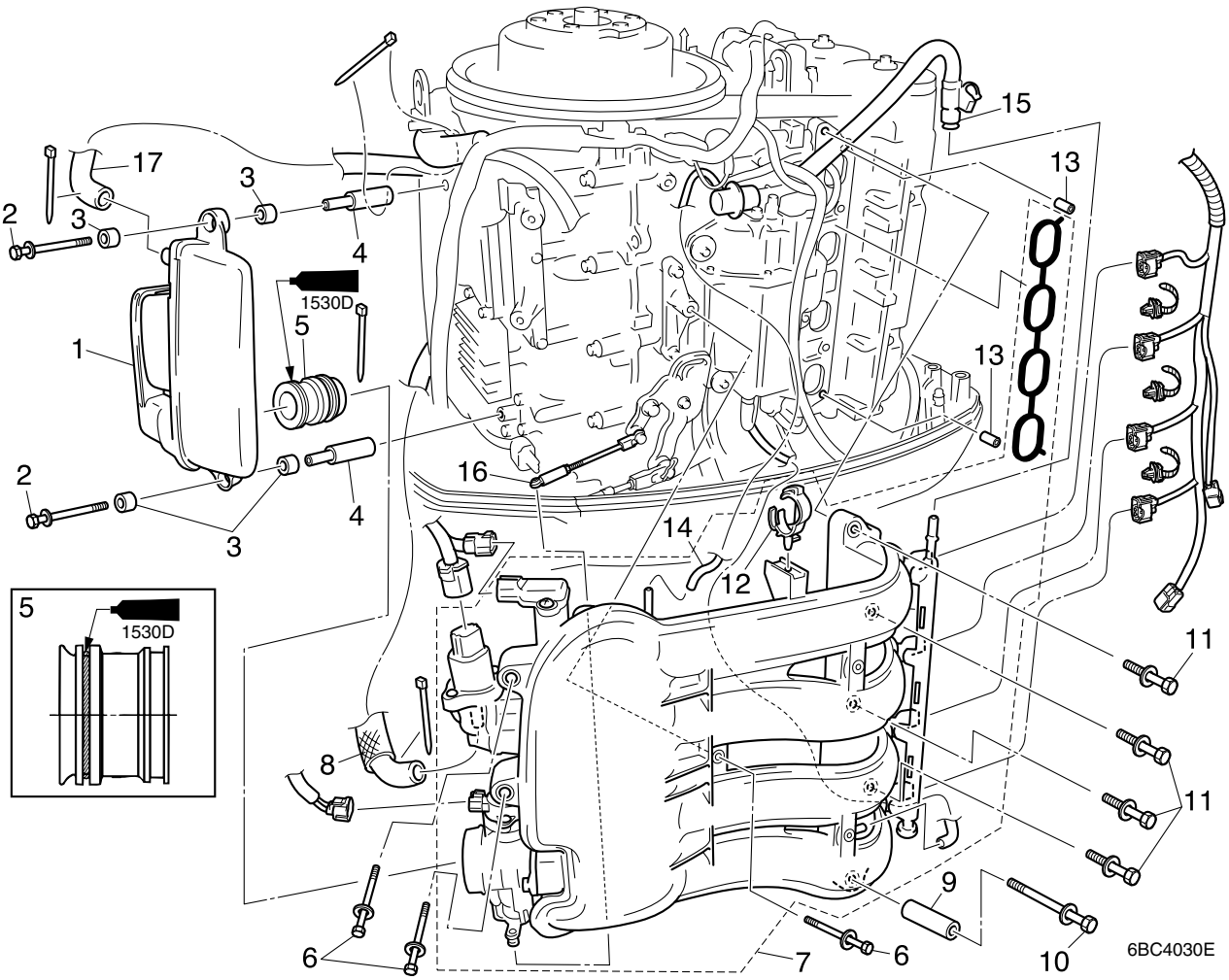

No.	Part name	Q'ty	Remarks
1	Intake silencer	1	
2	Bolt	2	M6 × 80 mm
3	Bushing	4	
4	Collar	2	
5	Joint	1	
6	Bolt	3	M6 × 45 mm
7	Intake manifold assembly	1	
8	Canister hose	1	
9	Spacer	1	
10	Bolt	1	M8 × 100 mm
11	Bolt	4	M8 × 40 mm
12	Clamp	1	
13	Pin	2	
14	Vacuum hose	1	
15	Quick connector	1	
16	Throttle link rod	1	
17	Blowby hose	1	

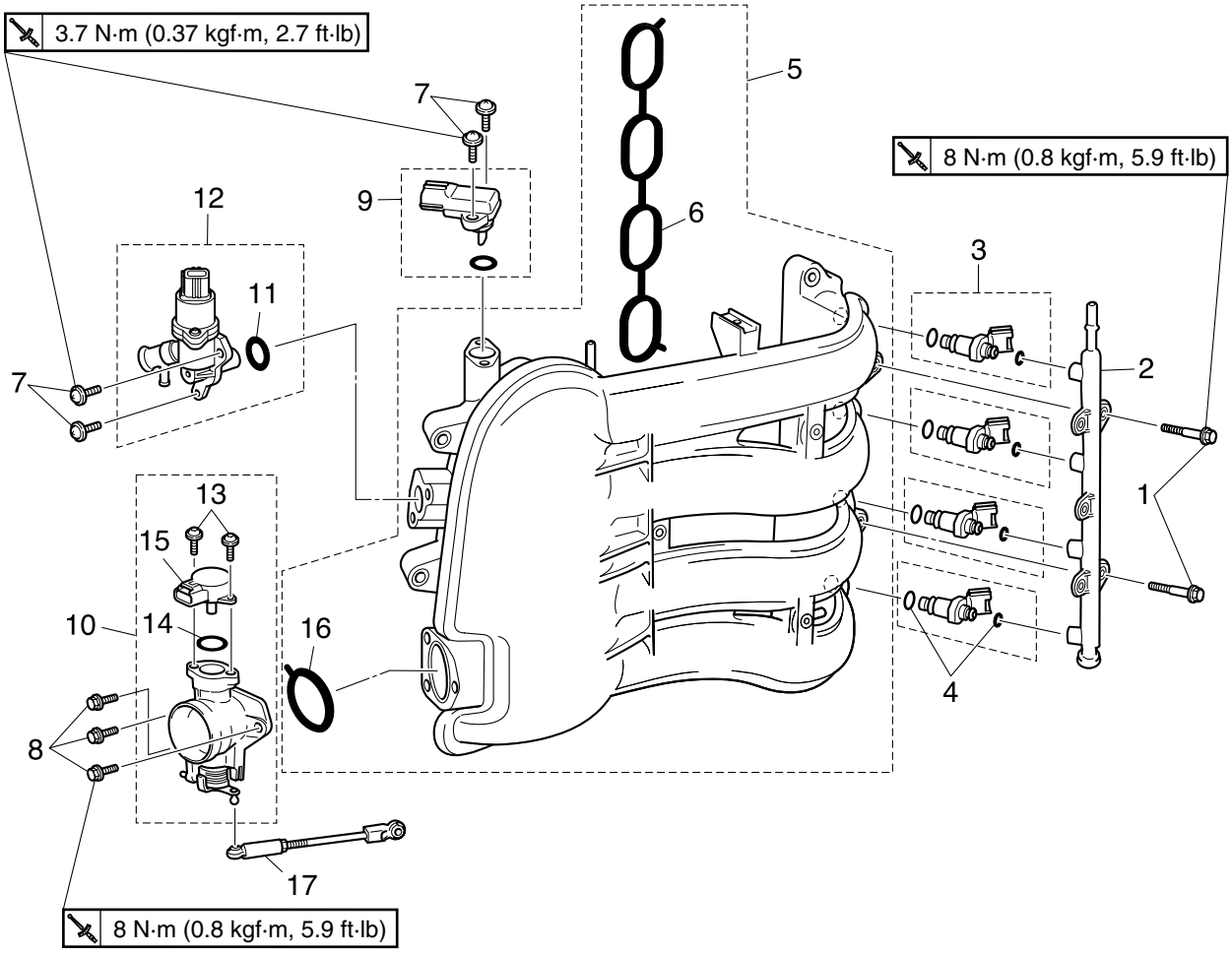

6BC4040E

No.	Part name	Q'ty	Remarks
1	Bolt	2	M6 × 38 mm
2	Fuel rail	1	
3	Fuel injector	4	
4	O-ring set	4	Not reusable
5	Intake manifold	1	
6	Gasket	1	Not reusable
7	Screw	4	ø5 × 13 mm
8	Bolt	3	M6 × 16 mm
9	Sensor assembly	1	
10	Throttle body assembly	1	
11	O-ring	1	Not reusable
12	ISC	1	
13	Screw	2	ø4 × 12 mm
14	O-ring	1	Not reusable
15	TPS	1	
16	Gasket	1	Not reusable
17	Throttle link rod	1	

Throttle link

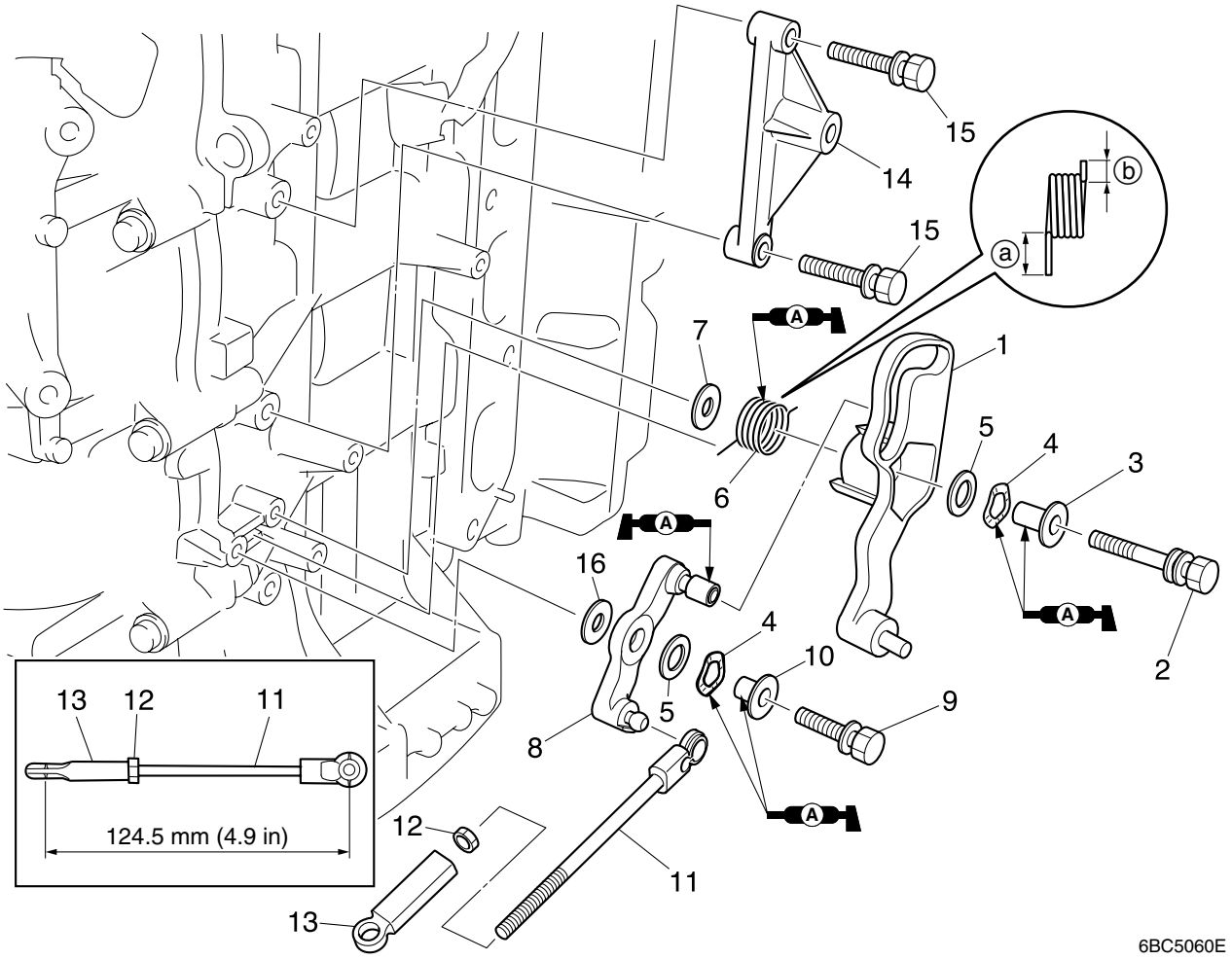

No.	Part name	Q'ty	Remarks
1	Accelerator cam	1	
2	Bolt	1	M6 × 35 mm
3	Collar	1	
4	Wave washer	2	
5	Washer	2	
6	Spring	1	ⓐ > ⓑ
7	Washer	1	
8	Throttle control lever	1	
9	Bolt	1	M6 × 25 mm
10	Collar	1	
11	Throttle link rod	1	
12	Nut	1	
13	Throttle link rod joint	1	
14	Bracket	1	
15	Bolt	2	M6 × 30 mm
16	Washer	1	

Removing the intake manifold

1. Reduce the fuel pressure.

NOTE:

To reduce the fuel pressure, see “Reducing the fuel pressure” (4-7).

2. Remove the intake manifold.

NOTE:

- To disconnect the quick connector, see “Disconnecting the quick connector” (4-7).
- To remove the intake manifold, see the exploded diagram (4-11).
- To check the ISC, see “Checking the ISC” (8-40).
- To check the sensor assembly, see “Checking the sensor assembly” (8-41).
- To check the fuel injector, see “Checking the fuel injector” (8-51).

Checking the intake silencer

1. Check the intake silencer. Replace if cracked.

Checking the intake manifold

1. Check the intake manifold. Replace if cracked.

Installing the throttle link

1. Install the washer ①, wave washer ② and collar ③ onto the throttle control lever ④, and then install the washer ⑤ and throttle control lever ④ to the cylinder block. Then tighten the bolt ⑥.

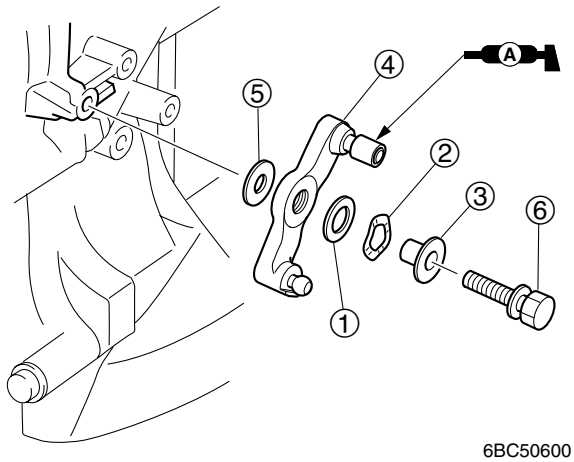

6BC50600

2. Set the spring ⑦ onto the accelerator cam ⑧ as shown.

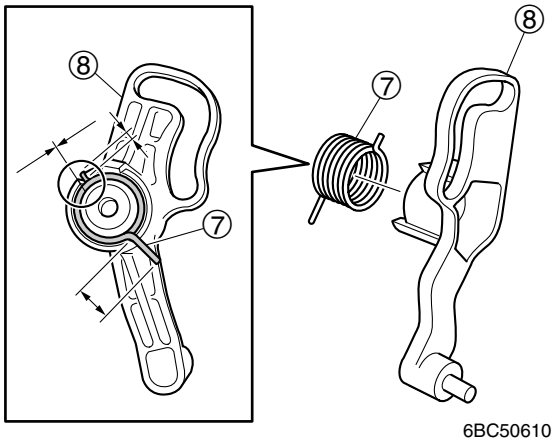

6BC50610

3. Install the washers ⑨, ⑩, wave washer ⑪ and collar ⑫ onto the accelerator cam ⑧, and then install the accelerator cam ⑧ to the cylinder block. Then tighten the bolt ⑬.

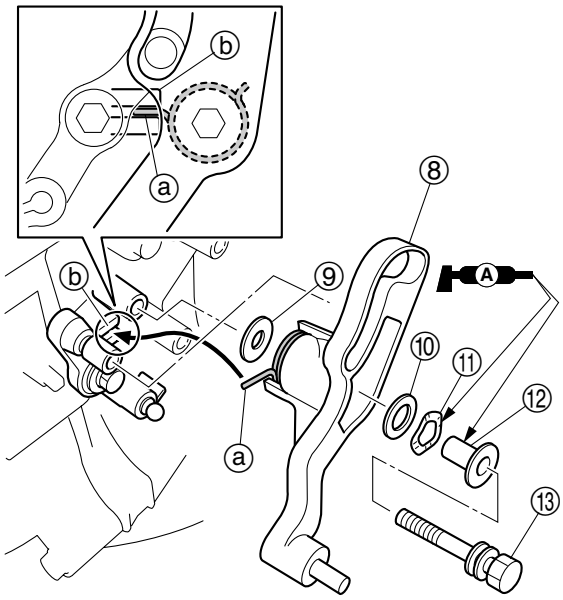

6BC50630

NOTE:

Be sure to fit the end ⓐ of the spring into the slot ⓑ in the cylinder block.

4

4. Check that the throttle control lever ④ and accelerator cam ⑧ moves smoothly.

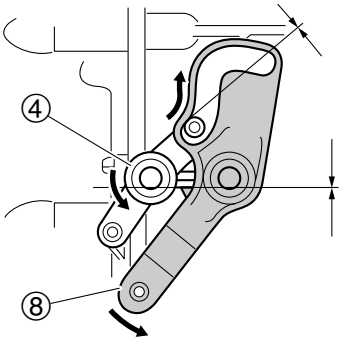

NOTE:
- If the throttle control lever does not returned, repeat the steps 2–4.
- To adjust the throttle system, see “Checking the throttle system” (3-9).

Installing the intake manifold

1. Install the gasket ① onto the intake manifold ②.

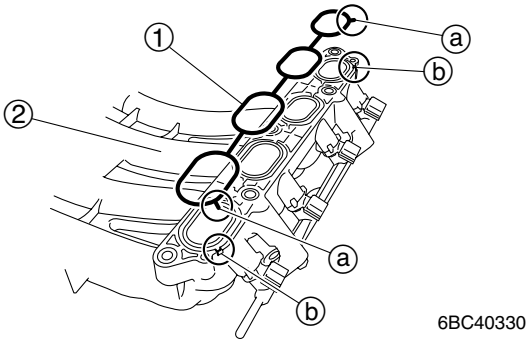

NOTE:
Be sure to install the projection ⓐ on the gasket into the slit ⓑ in the intake manifold securely to prevent the gasket from kinking.

2. Install the intake manifold, and then tighten the bolts.

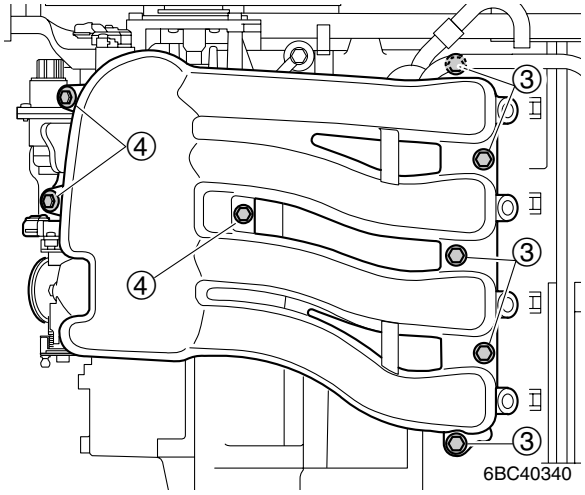

NOTE:
- See the exploded diagram (4-11).
- Tighten the M8 bolts ③ first, then tighten the M6 bolts ④.
- To route the wirings and hoses, see “Electrical component and wiring harness routing” (8-1).
- To check the throttle system, see “Checking the throttle system” (3-9).

Installing the fuel injector

1. Install the new O-rings onto the fuel injector.

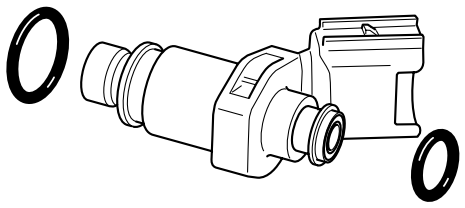

2. Install the fuel injectors ① to the fuel rail ②.

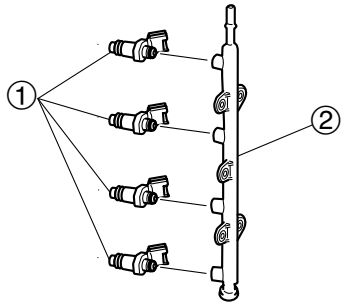

6BC40210

3. Install the fuel rail onto the intake manifold, and then tighten the fuel rail bolts ③ to the specified torques equally.

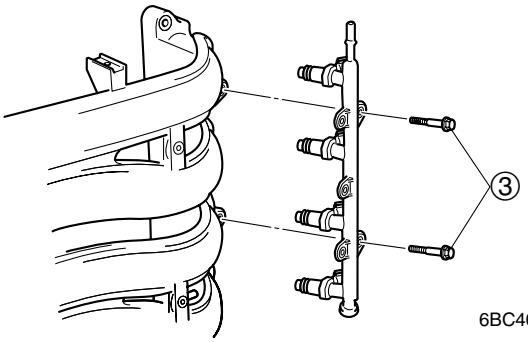

6BC40220

	Fuel rail bolt ③: 8 N·m (0.8 kgf·m, 5.9 ft·lb)

4. Connect the fuel injector couplers and quick connector.

NOTE:
- To route the wiring harness, see “Electrical component and wiring harness routing” (8-1).
- To check the operation of the fuel injector, see “Checking the fuel injector” (8-51).

Installing the throttle body assembly

1. Install the new gasket ① and throttle body assembly ② to the intake manifold, and then tighten the bolts to the specified torque.

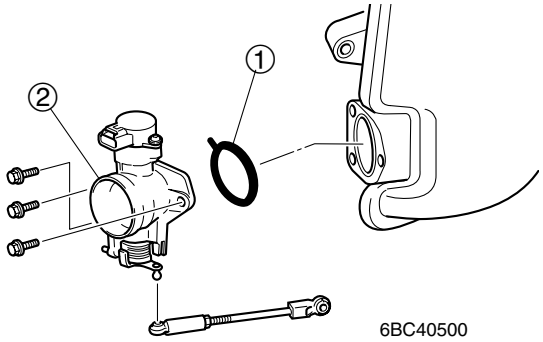

6BC40500

	Throttle body assembly bolt: 8 N·m (0.8 kg·fm, 5.9 ft·lb)

2. Connect the throttle link rod.

NOTE:
- To check the throttle link rod and throttle cable, see “Checking the throttle system” (3-9).
- Be sure to check the TPS output voltage after installing the throttle body assembly or TPS, see “Checking the TPS” (8-38).

Installing the intake silencer

1. Install the intake silencer ① to the throttle body assembly, and then fasten the plastic tie ② securely as shown.

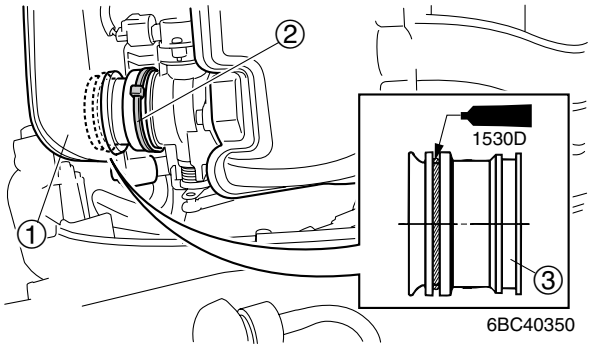

6BC40350

NOTE:
Apply sealant as shown when installing the joint ③ to the intake silencer.

Fuel filter and fuel pump

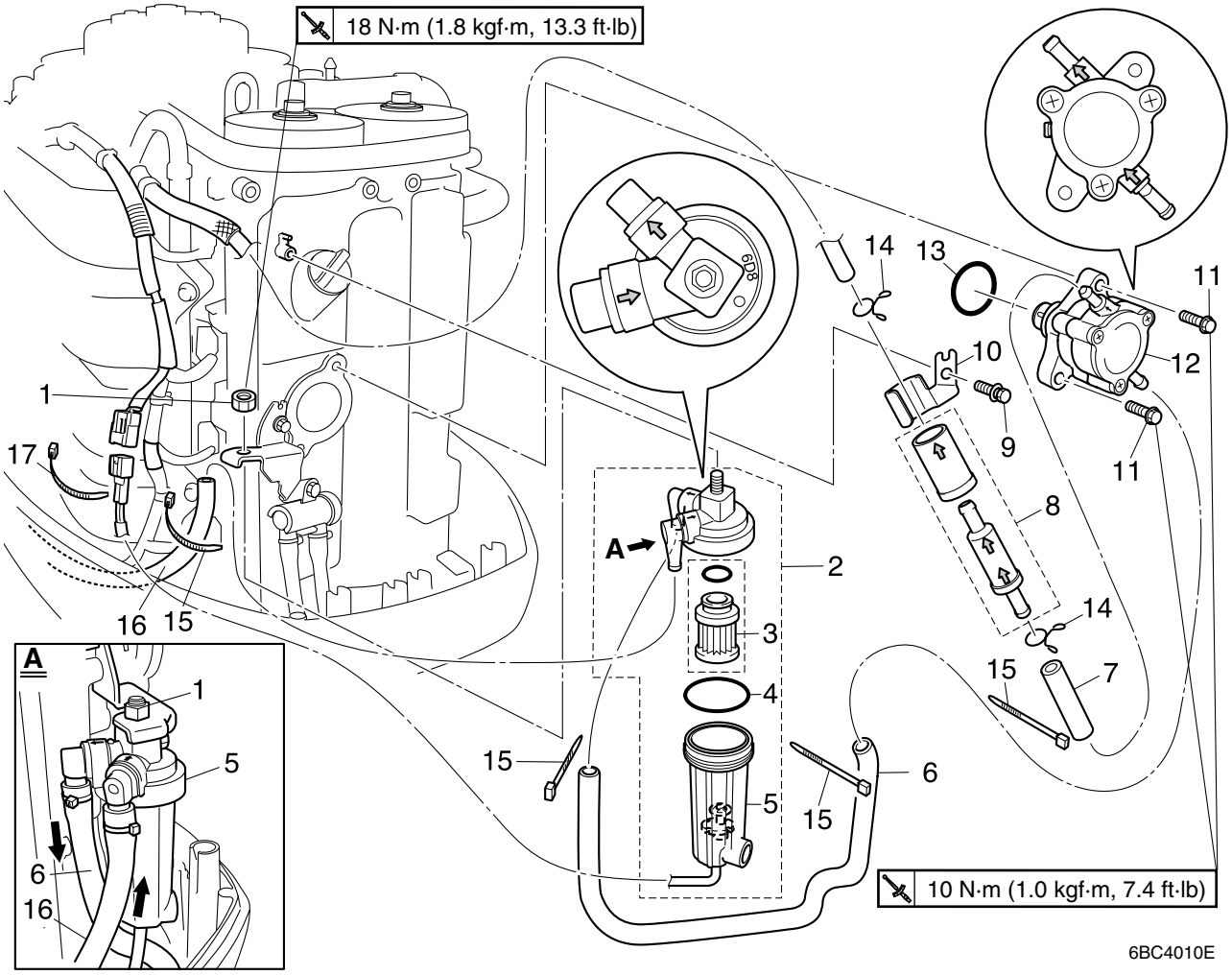

No.	Part name	Q'ty	Remarks
1	Nut	1	
2	Fuel filter assembly	1	
3	Fuel filter element	1	
4	O-ring	1	Not reusable
5	Fuel filter cup assembly	1	
6	Fuel hose	1	
7	Fuel hose	1	
8	Strainer	1	
9	Bolt	1	M6 × 12 mm
10	Bracket	1	
11	Bolt	2	M6 × 30 mm
12	Fuel pump assembly	1	
13	O-ring	1	Not reusable
14	Clamp	2	
15	Plastic tie	4	Not reusable
16	Fuel hose	1	
17	Plastic tie	1	

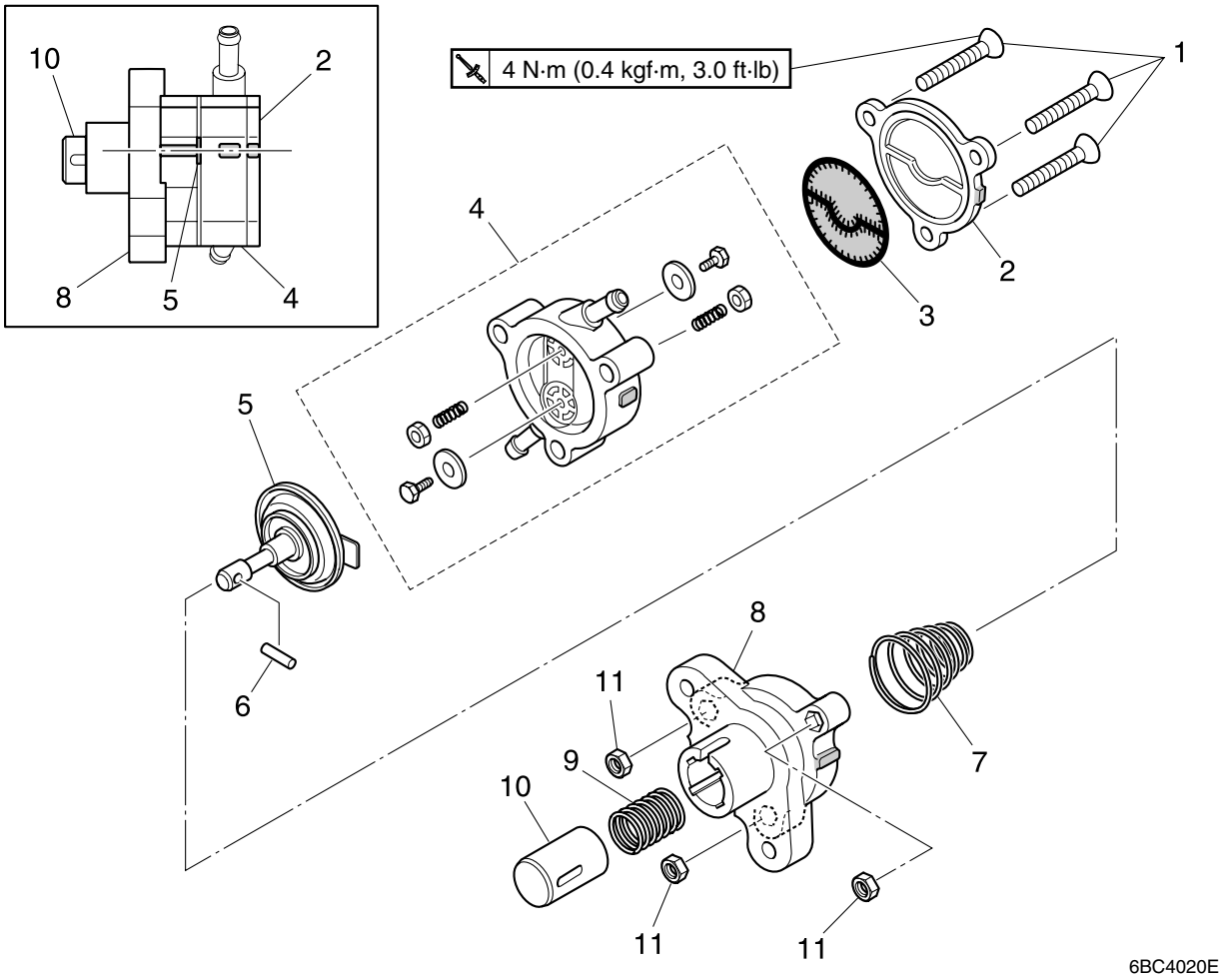

No.	Part name	Q'ty	Remarks
1	Screw	3	ø6 × 35 mm
2	Cover	1	
3	Diaphragm	1	
4	Fuel pump body 2	1	
5	Diaphragm	1	
6	Pin	1	
7	Spring	1	
8	Fuel pump body 1	1	
9	Spring	1	
10	Plunger	1	
11	Nut	3	

Checking the fuel filter assembly

NOTE:

- To check the fuel filter element, see “Checking the fuel filter” (3-4).
- To check the water detection switch, see “Checking the water detection switch” (8-50).

1. Connect the special service tool to the fuel inlet ①.

2. Cover the fuel outlet ② with your finger, and then apply the specified positive pressure. Replace the O-ring, fuel filter cup assembly or fuel filter assembly if the specified pressure cannot be maintained for at least 15 seconds.

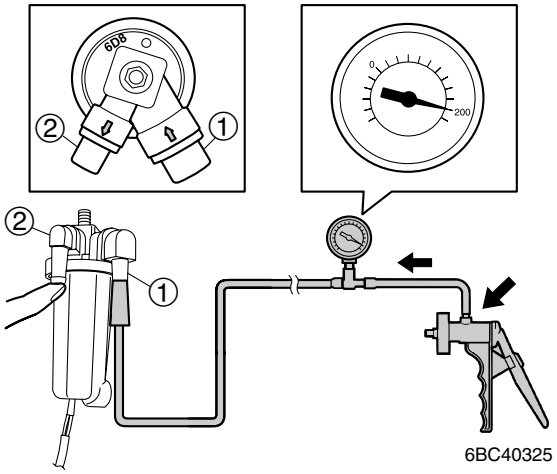

NOTE:

Use a commercially available vacuum/pressure pump gauge set that can be pressurized up to 200 kPa (2.0 kgf/cm², 29.0 psi).

Specified positive pressure:
200 kPa (2.0 kgf/cm², 29.0 psi)

3. Connect the special service tool to the fuel outlet ②.

4. Cover the fuel inlet ① with your finger, and then apply the specified negative pressure. Replace the O-ring, fuel filter cup assembly or fuel filter assembly if the specified pressure cannot be maintained for at least 15 seconds.

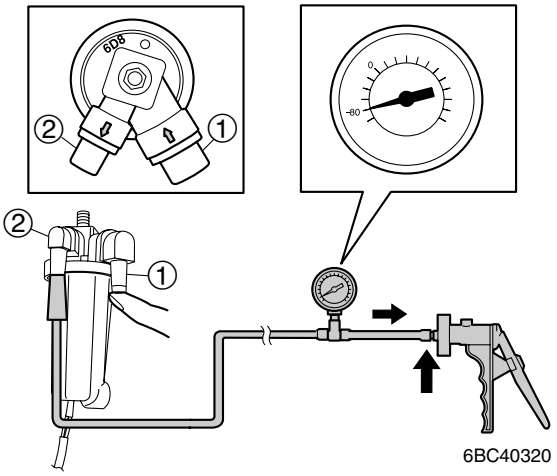

Vacuum/pressure pump gauge set:
90890-06756

Specified negative pressure:
80 kPa (0.8 kgf/cm², 11.6 psi)

Checking the fuel pump

1. Connect the special service tool ① to the fuel pump inlet ②.

2. Cover the fuel pump outlet with your finger, and then apply the specified positive pressure. Check that there is no air leakage.

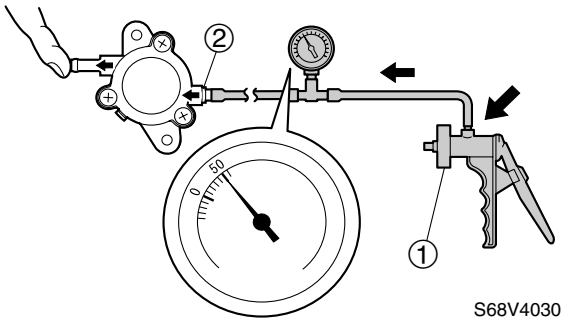

Vacuum/pressure pump gauge set ①:
90890-06756

Specified positive pressure:
50 kPa (0.5 kgf/cm², 7.3 psi)

3. Apply the specified negative pressure and check that there is no air leakage.

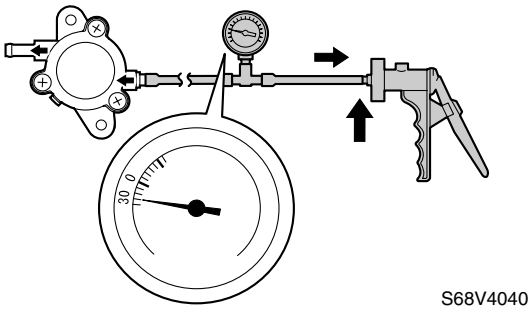

Specified negative pressure:
30 kPa (0.3 kgf/cm², 4.4 psi)

4. Connect the special service tool ① to the fuel pump outlet ③.

5. Apply the specified positive pressure and check that there is no air leakage.

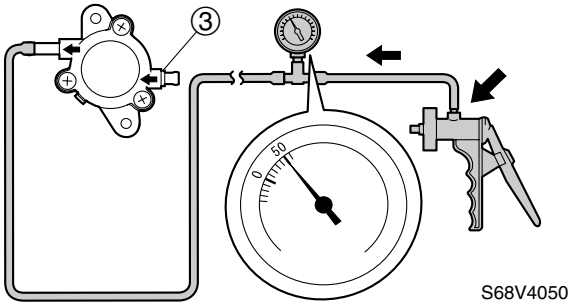

Specified positive pressure:
50 kPa (0.5 kgf/cm², 7.3 psi)

Disassembling the fuel pump

1. Disassemble the fuel pump.

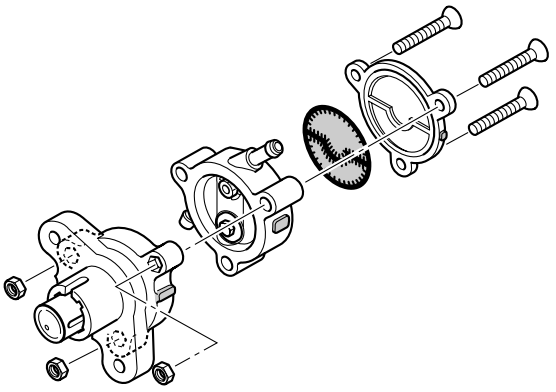

2. Hold fuel pump body 1 ① in a vise using aluminum plates on both sides.

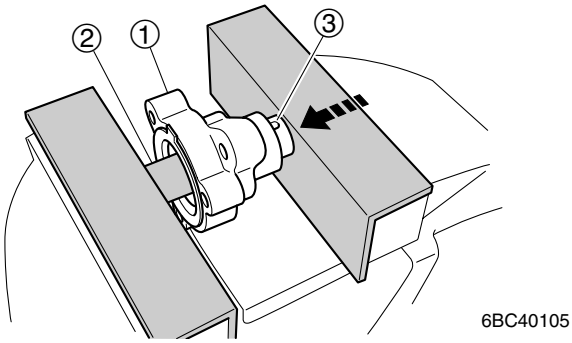

NOTE:

- Place the special service tool ② between the diaphragm and the aluminum plates as shown.
- Push with the vise until the plunger ③ fully stops.

Small end bearing installer ②:
90890-06527

3. Align the hole ⓐ in the plunger ③ with the slot in fuel pump body 1 ①.

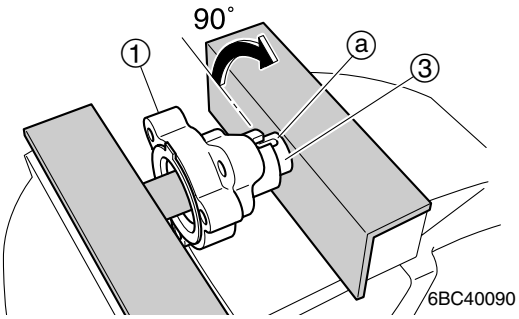

NOTE:
Turn fuel pump body 1 ① approximately 90°.

4. Remove the pin ④, and then disassemble fuel pump body 1 ①.

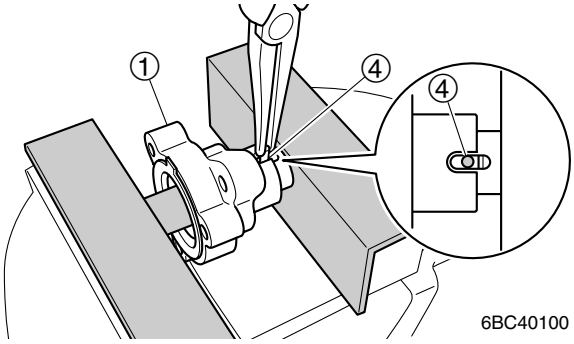

NOTE:
Slowly release the vise, and then remove the plunger, springs and diaphragm.

Checking the diaphragm and valve

1. Check the diaphragms and valves. Replace the diaphragms if torn and the valves if cracked.

Assembling the fuel pump

NOTE:
Clean the parts and soak the valves and diaphragms in gasoline before assembling to obtain prompt operation of the fuel pump when starting the engine.

1. Assemble fuel pump body 1 ①, and then hold it in a vise using aluminum plates on both sides, making sure that the holes ⓐ in the plunger ② and diaphragm are aligned.

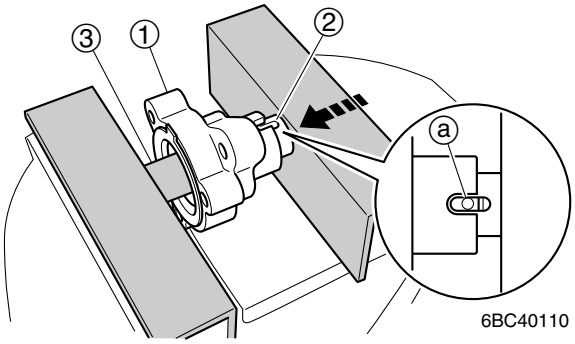

NOTE:
- Place the special service tool ③ between the diaphragm and the aluminum plates as shown.
- Push with the vise until the plunger ② fully stops.

	Small end bearing installer ③: 90890-06527

2. Install the pin ④ into the plunger hole.

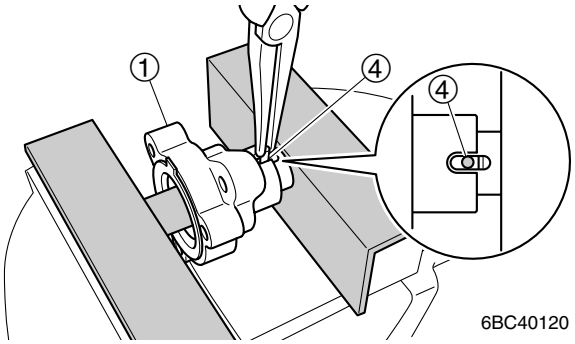

3. Align the tab ⓑ on the diaphragm with the slot ⓒ in fuel pump body 1 ①.

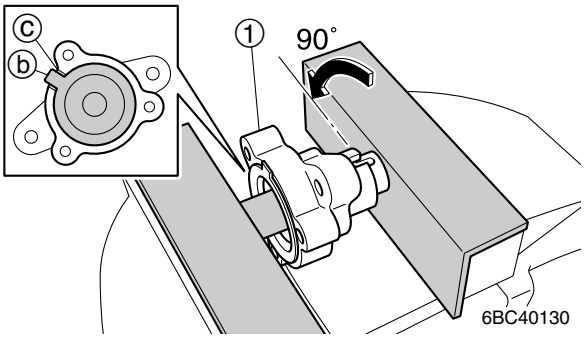

NOTE:
Turn fuel pump body 1 ① approximately 90°.

4. Remove fuel pump body 1 ① from the vise, and then push the plunger down several times to make sure that it moves smoothly.

5. Assemble the fuel pump as shown.

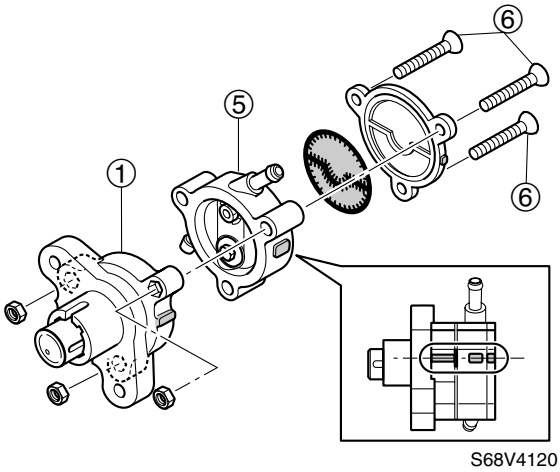

NOTE:
- Moisten the inside of the fuel pump with gasoline to ensure a good seal.
- Be sure to align the projections on the cover, fuel pump body 2 ⑤ and fuel pump body 1 ①.
- Make sure that the diaphragms are kept in place through the assembly process.
- After assembling the fuel pump, check it for air leakage. See “Checking the fuel pump” (4-20).

	Fuel pump screw ⑥: 4 N·m (0.4 kgf·m, 3.0 ft·lb)

4

Vapor separator

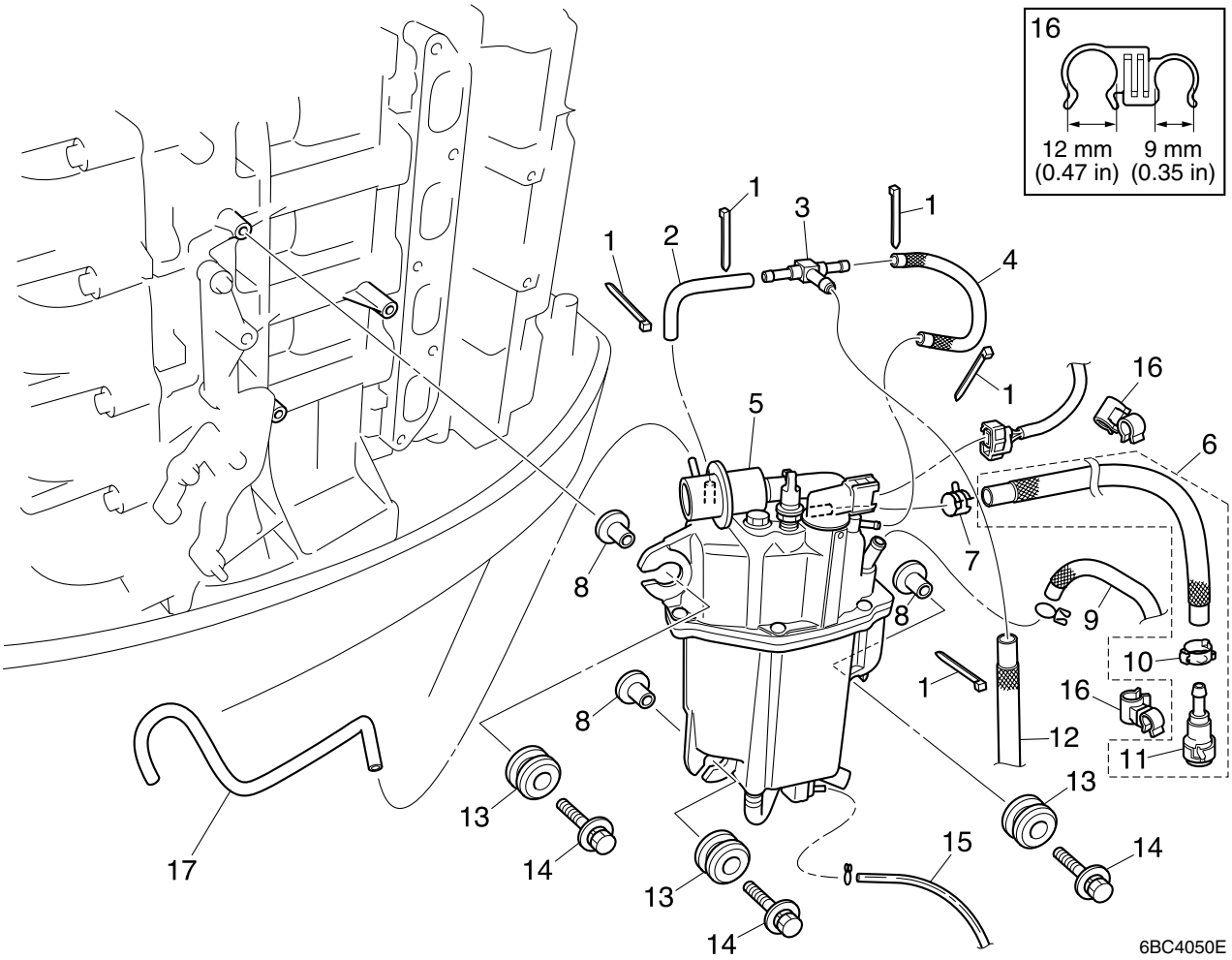

No.	Part name	Q'ty	Remarks
1	Plastic tie	5	Not reusable
2	Hose	1	
3	Joint	1	
4	Hose	1	
5	Vapor separator	1	
6	Fuel hose	1	
7	Clamp	1	
8	Collar	3	
9	Fuel inlet hose	1	
10	Clamp	1	Not reusable
11	Quick connector	1	
12	Hose	1	
13	Grommet	3	
14	Bolt	3	M6 × 30 mm
15	Hose	1	
16	Clamp	2	
17	Hose	1	

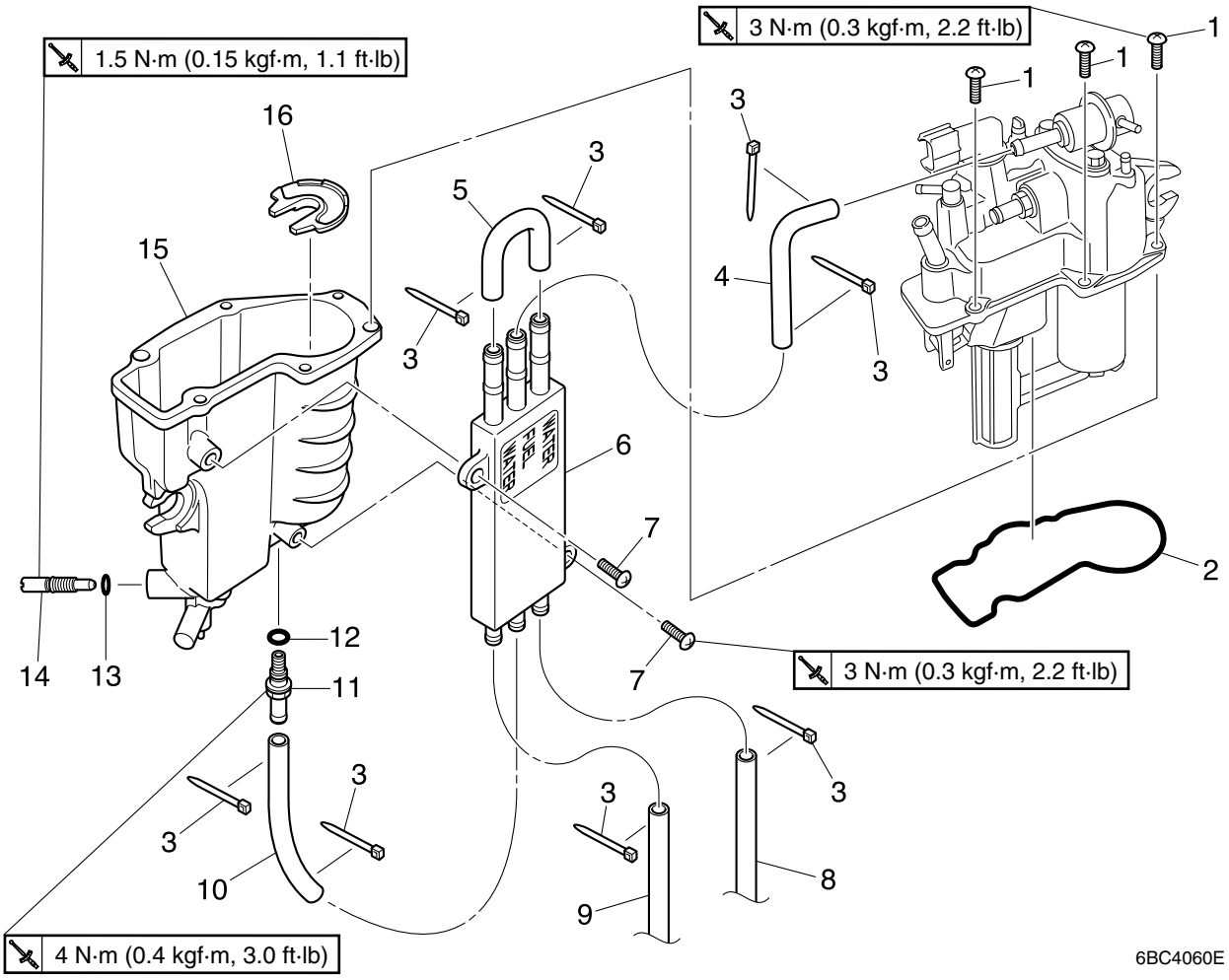

No.	Part name	Q'ty	Remarks
1	Screw	6	ø5 × 14 mm
2	Gasket	1	Not reusable
3	Plastic tie	8	Not reusable
4	Fuel hose	1	
5	Hose	1	
6	Fuel cooler	1	
7	Screw	2	ø6 × 15 mm
8	Hose	1	
9	Hose	1	
10	Fuel hose	1	
11	Joint screw	1	
12	O-ring	1	Not reusable
13	O-ring	1	Not reusable
14	Drain screw	1	
15	Float chamber	1	
16	Damper	1	

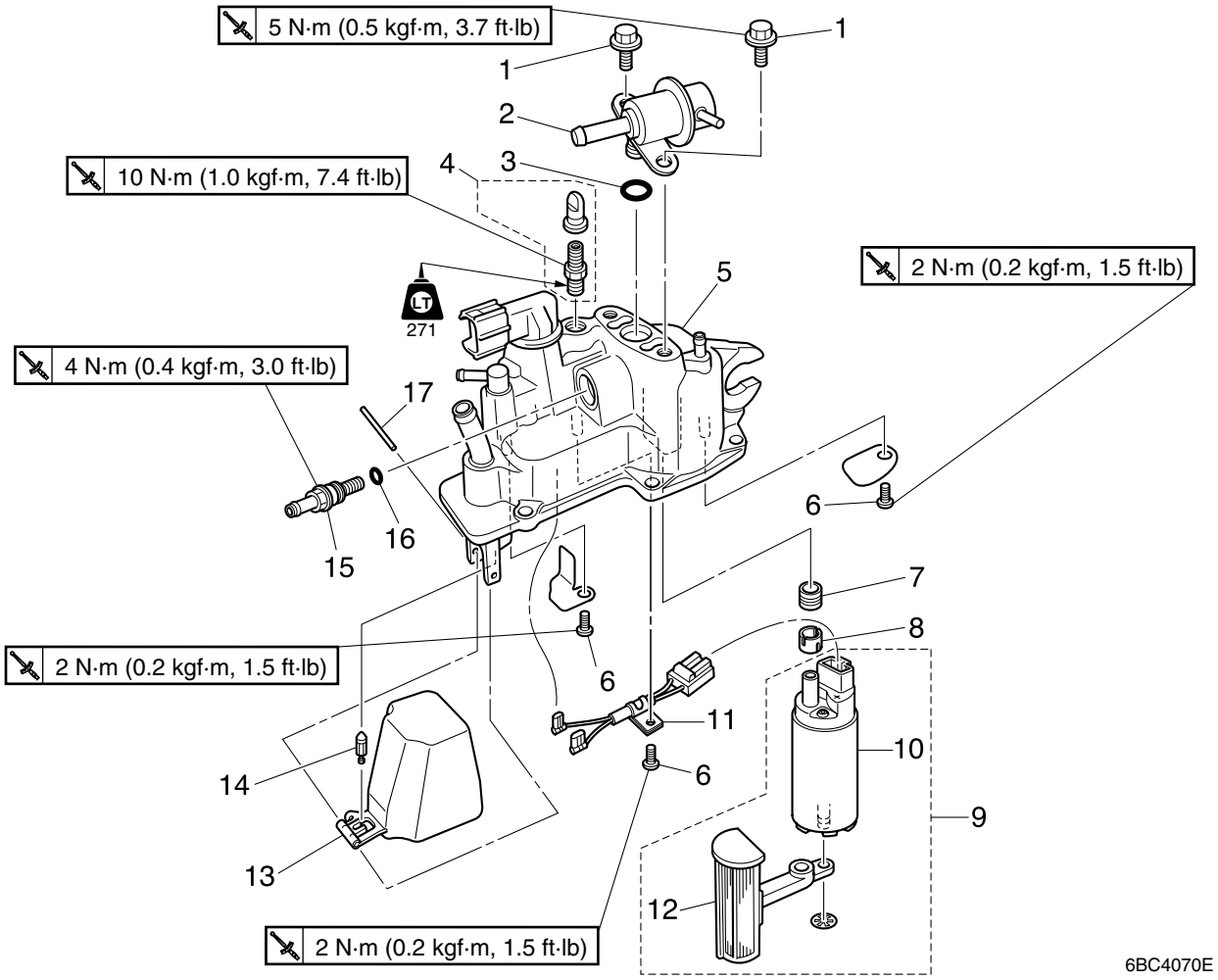

No.	Part name	Q'ty	Remarks
1	Bolt	2	M6 × 12 mm
2	Pressure regulator	1	
3	O-ring	1	Not reusable
4	Check valve	1	
5	Cover	1	
6	Screw	3	ø4 × 6 mm
7	Grommet	1	
8	Collar	1	
9	High-pressure fuel pump assembly	1	
10	High-pressure fuel pump	1	
11	Wiring harness	1	
12	Filter	1	
13	Float	1	
14	Needle valve	1	
15	Joint screw	1	
16	O-ring	1	Not reusable
17	Float pin	1	Not reusable

Removing the fuel hose clamp

1. Reduce the fuel pressure.

NOTE:

- To reduce the fuel pressure, see “Reducing the fuel pressure” (4-7).
- To disconnect the quick connector, see “Disconnecting the quick connector” (4-7).

2. Remove the fuel hose clamp by cutting the crimped section of the clamp.

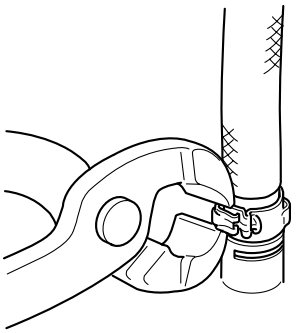

CAUTION:

If the fuel hose clamp is removed without cutting the crimp section first, the fuel hose could be damaged.

Installing the fuel hose clamp

1. Crimp a new fuel hose clamp securely.

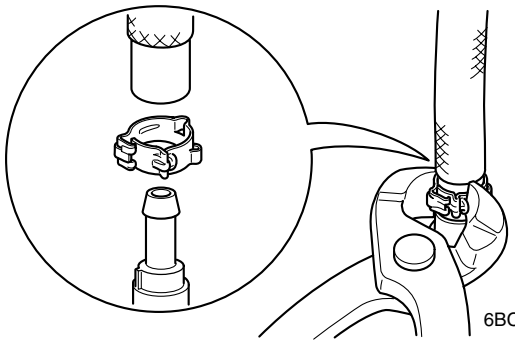

WARNING

Do not reuse the fuel hose clamp, always replace it with a new one, otherwise the fuel leakage could occur.

Disassembling the vapor separator

NOTE:

- To drain the fuel, see “Draining the fuel” (3-5).
- To check the high-pressure fuel pump, see “Checking the high-pressure fuel pump” (8-52).

1. Remove the float chamber, and then remove the float pin ① and float from the float chamber cover ②.

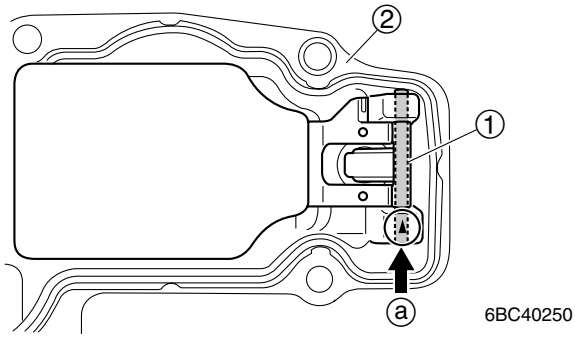

CAUTION:

Remove the float pin ① in the direction of the arrow ⓐ shown.

2. Remove the needle valve and other components.

Checking the vapor separator

1. Check the needle valve. Replace if bent or worn.

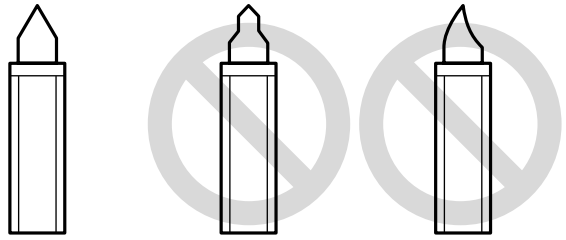

2. Check the float. Replace if there is deterioration.

3. Check the filter. Clean if there is dirt or residue.

Assembling the vapor separator

1. Install the needle valve and float to the float chamber cover.

2. Install a new float pin ① into the float chamber cover ②, and then check the float for smooth operation.

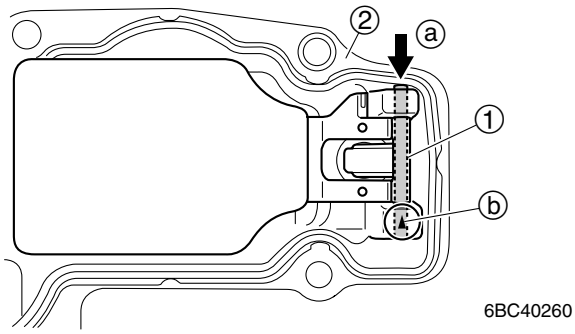

CAUTION:

- **Do not reuse the float pin ①, always replace it with a new one.**
- **Install a new float pin ① with its tapered end facing the punch mark ⓑ on the float chamber cover ② in the direction of the allow ⓐ shown.**

3. Check the float height ⓒ as shown. Adjust the float height by bending the lever ⓓ if out of specification.

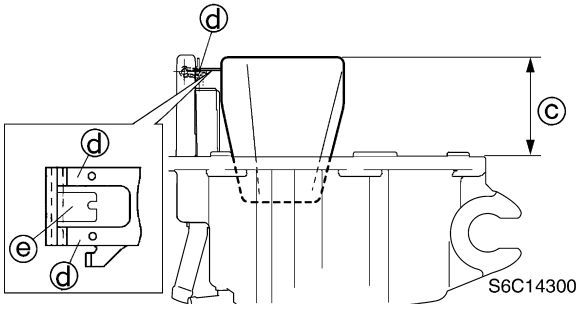

NOTE:

- Measure the height of the float when it is resting on the needle valve. Do not push the float down.
- Take measurements at the position shown, opposite the float pivot.
- When adjusting the float height, do not bend the lever ⓔ.

Float height ⓒ (reference data):
35 ± 1.0 mm (1.38 ± 0.04 in)

4. Check the float height ⓕ as shown. Adjust the float height by bending the stopper ⓖ if below specification.

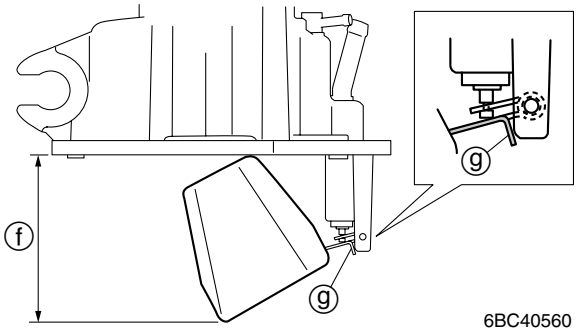

Float height ⓕ (reference data):
60 mm (2.36 in)

5. Install the high-pressure fuel pump, and then install the new gasket and float chamber.

Float chamber screw:
3 N·m (0.3 kgf·m, 2.2 ft·lb)

Canister

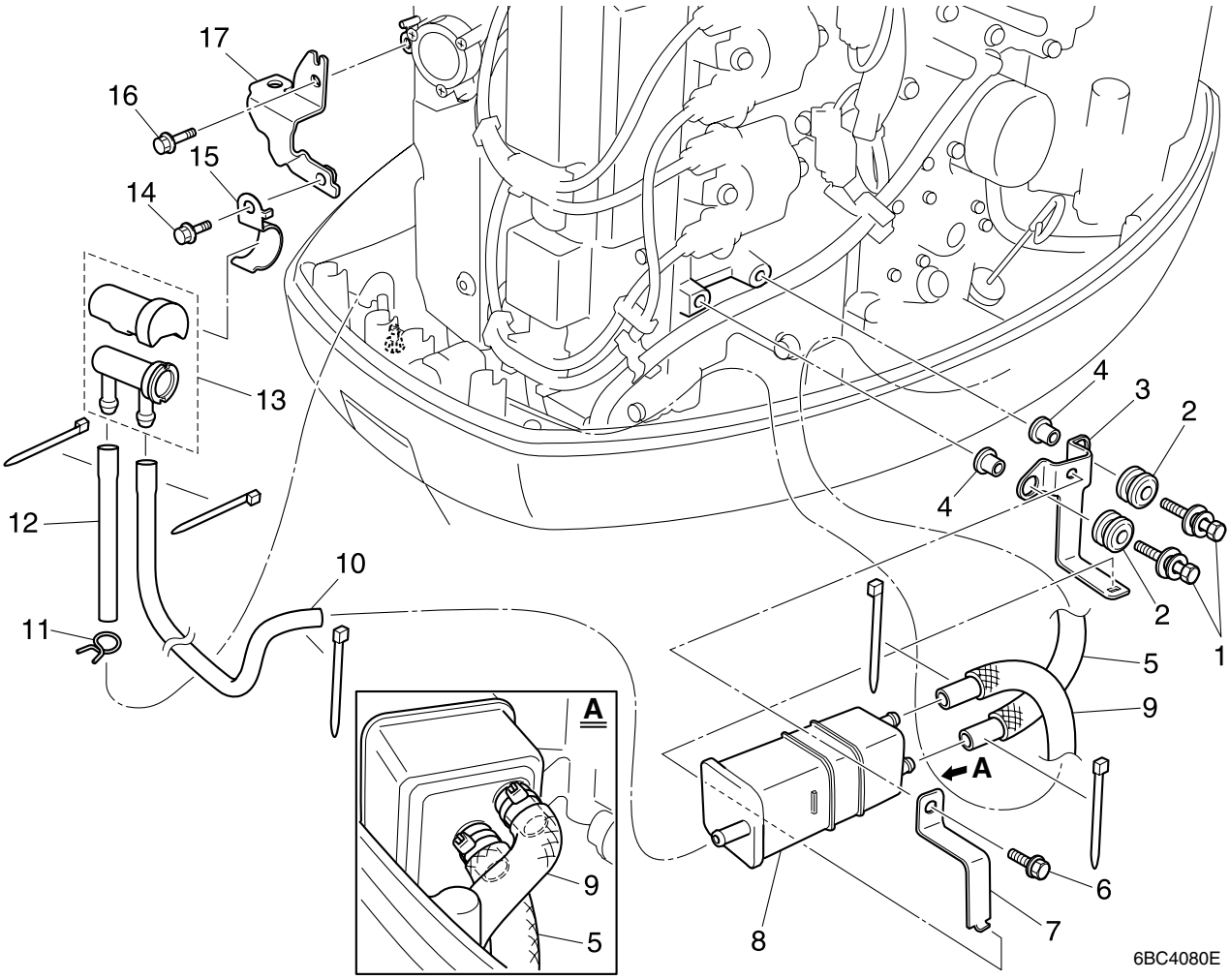

No.	Part name	Q'ty	Remarks
1	Bolt	2	M6 × 28 mm
2	Grommet	2	
3	Bracket	1	
4	Collar	2	
5	Hose	1	
6	Bolt	1	M6 × 16 mm
7	Bracket	1	
8	Canister	1	
9	Hose	1	
10	Hose	1	
11	Clamp	1	
12	Hose	1	
13	Filter	1	
14	Bolt	1	M6 × 10 mm
15	Holder	1	
16	Bolt	1	M6 × 16 mm
17	Bracket	1	

Checking the canister

1. Check the canister. Replace if cracked.

2. Connect the special service tool to the atmospheric port ① and cover the other ports, each with your fingers.

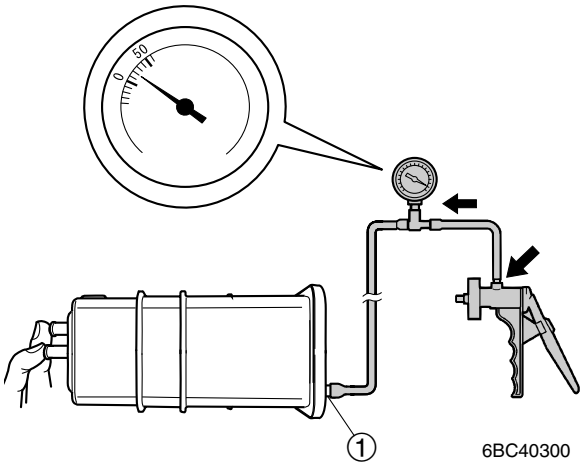

3. Apply the specified positive pressure and check that there is no air leakage. Replace the canister if there is air leakage.

	Vacuum/pressure pump gauge set: 90890-06756

	Specified positive pressure: 19.6 kPa (0.196 kgf/cm^2, 2.8 psi)

Checking the filter

1. Check the filter. Replace if there is dirt, residue or external damage.

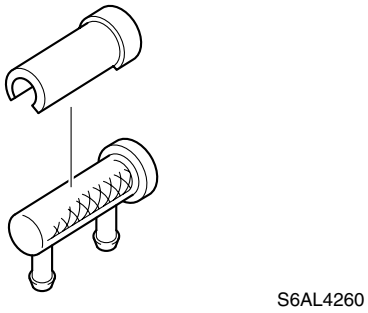

— MEMO —

Power unit

Power unit (Check and adjustment) 5-1
Checking the compression pressure 5-1
Checking the oil pressure 5-2
Base assembly 5-3
Timing belt and sprocket 5-4
Ignition coil and starter motor 5-5
Camshaft 5-7
Checking the valve clearance 5-8
Adjusting the valve clearance 5-10
Replacing the timing belt 5-11

Power unit 5-14
Power unit assembly 5-14
ECM 5-16
Junction box 5-18
Removing the power unit 5-19
Removing the timing belt, sprocket and camshaft 5-20
Checking the timing belt and sprocket 5-22
Checking the camshaft 5-23
Installing the camshaft, sprocket and timing belt 5-23

Cylinder head 5-29
Removing the cylinder head 5-31
Checking the valve spring 5-31
Checking the valve 5-32
Checking the valve guide 5-33
Replacing the valve guide 5-33
Checking the valve seat 5-34
Refacing the valve seat 5-35
Checking the cylinder head 5-37
Installing the valve 5-37
Installing the cylinder head 5-38

Cylinder block 5-40
Cylinder block 5-40
Exhaust cover 5-41
Removing the exhaust cover 5-43
Checking the exhaust cover 5-43
Checking the PCV 5-43
Disassembling the cylinder block 5-43
Checking the cylinder block 5-45
Checking the piston diameter 5-45
Checking the cylinder bore 5-45
Checking the piston clearance 5-45
Checking the piston ring 5-46
Checking the piston ring end gap 5-46

Checking the piston ring groove 5-47
Checking the piston ring side clearance 5-47
Checking the connecting rod big end side clearance 5-47
Checking the crankshaft 5-47
Checking the crankpin oil clearance 5-48
Selecting the connecting rod bearing 5-49
Checking the crankshaft journal oil clearance 5-51
Selecting the main bearing 5-52
Assembling the cylinder block 5-54
Installing the exhaust cover 5-59
Installing the power unit 5-60

Power unit
(Check and adjustment)
Checking the compression pressure

1. Start the engine, warm it up and then turn it off.

2. Remove the clip from the engine stop lanyard switch.

3. Disconnect the all fuel injector couplers.

4. Remove the spark plug wire cover, spark plug wires and all spark plugs.

5. Install the special service tools into a spark plug hole.

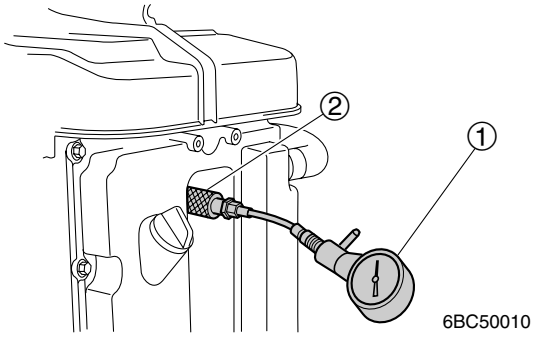

CAUTION:

Before removing the spark plugs, blow compressed air in the spark plugs well to clear out any dirt or dust that may fall into the cylinders.

Compression gauge ①:
90890-03160
Compression gauge extension M14 ②:
90890-06563

6. Fully open the throttle.

7. Crank the engine until the reading on the compression gauge stabilizes, and then measure the compression pressure.

NOTE:
- Be sure to use the fully charged battery when measuring the compression pressure.
- Make a note of each cylinder measurement numeral a few times to find the compression average.

Minimum compression pressure (reference data):
930 kPa (9.3 kgf/cm^2, 132 psi)

8. If the compression pressure is below specification or the compression pressure for each cylinder is unbalanced, add a small amount of engine oil to the cylinder, and then measure the pressure again.

NOTE:
- If the compression pressure increases, check the pistons and piston rings for wear.
- If the compression pressure does not increase, check the valve clearance, valve, valve seat, cylinder head gasket and cylinder head.

9. Remove the special service tools.

NOTE:
Repeat the steps 5–9 for each cylinder.

10. Install the all parts removed.

Checking the oil pressure

1. Remove the flywheel magnet cover.

2. Disconnect the oil pressure switch lead ①.

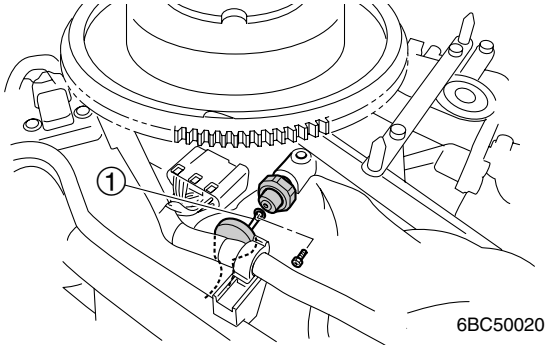

3. Remove the oil pressure switch, and then install an oil pressure gauge ② to the oil pressure switch installation hole.

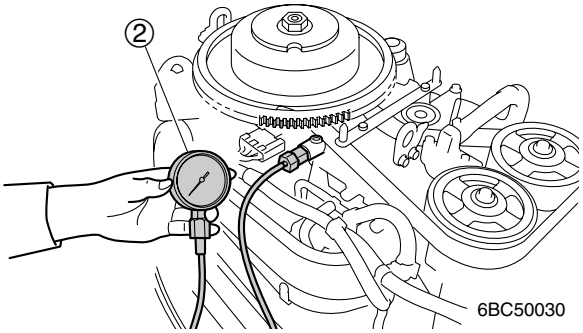

NOTE:
- Place a rag under the oil pressure switch.
- Use a commercially available oil pressure gauge ②.

4. Start the engine and warm it up.

5. Measure the oil pressure. Check for oil leakage and also check the oil pump and oil strainer if out of specification.

NOTE:
The actual oil pressure may vary depending on the temperature and viscosity of the engine oil.

Oil pressure (reference data):
510 kPa (5.1 kgf/cm^2, 74 psi) at engine idle speed

6. Remove the oil pressure gauge ②.

NOTE:
Apply LOCTITE 572 when installing the oil pressure switch.

Oil pressure switch:
8 N·m (0.8 kgf·m, 5.9 ft·lb)

7. Install the oil pressure switch, and then tighten it to the specified torque.

8. Connect the oil pressure switch lead ①, and then tighten the oil pressure switch lead terminal bolt to the specified torque.

NOTE:
To connect the oil pressure switch lead, see “Electrical component and wiring harness routing” (8-1).

Oil pressure switch lead terminal bolt:
2 N·m (0.2 kgf·m, 1.5 ft·lb)

5

Base assembly

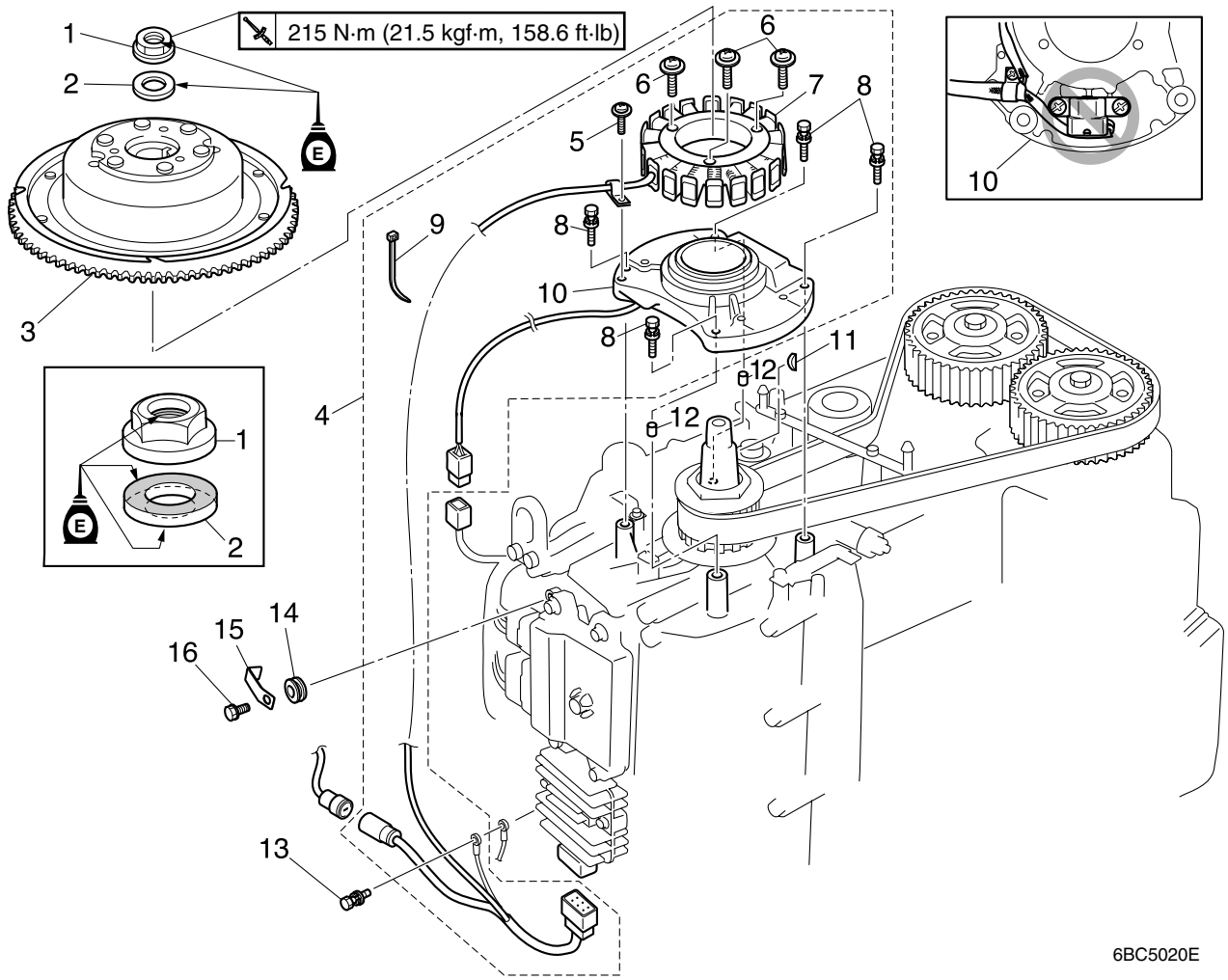

No.	Part name	Q'ty	Remarks
1	Nut	1	Width across flats: 36mm
2	Washer	1	
3	Flywheel magnet	1	
4	Base assembly	1	
5	Screw	1	ø4 × 10 mm
6	Screw	3	ø6 × 30 mm
7	Stator assembly	1	
8	Bolt	4	M6 × 30 mm
9	Plastic tie	1	
10	Pulser coil assembly	1	
11	Woodruff key	1	
12	Dowel	2	
13	Bolt	1	M6 × 16 mm
14	Grommet	1	
15	Holder	1	
16	Bolt	1	M6 × 14 mm

Timing belt and sprocket

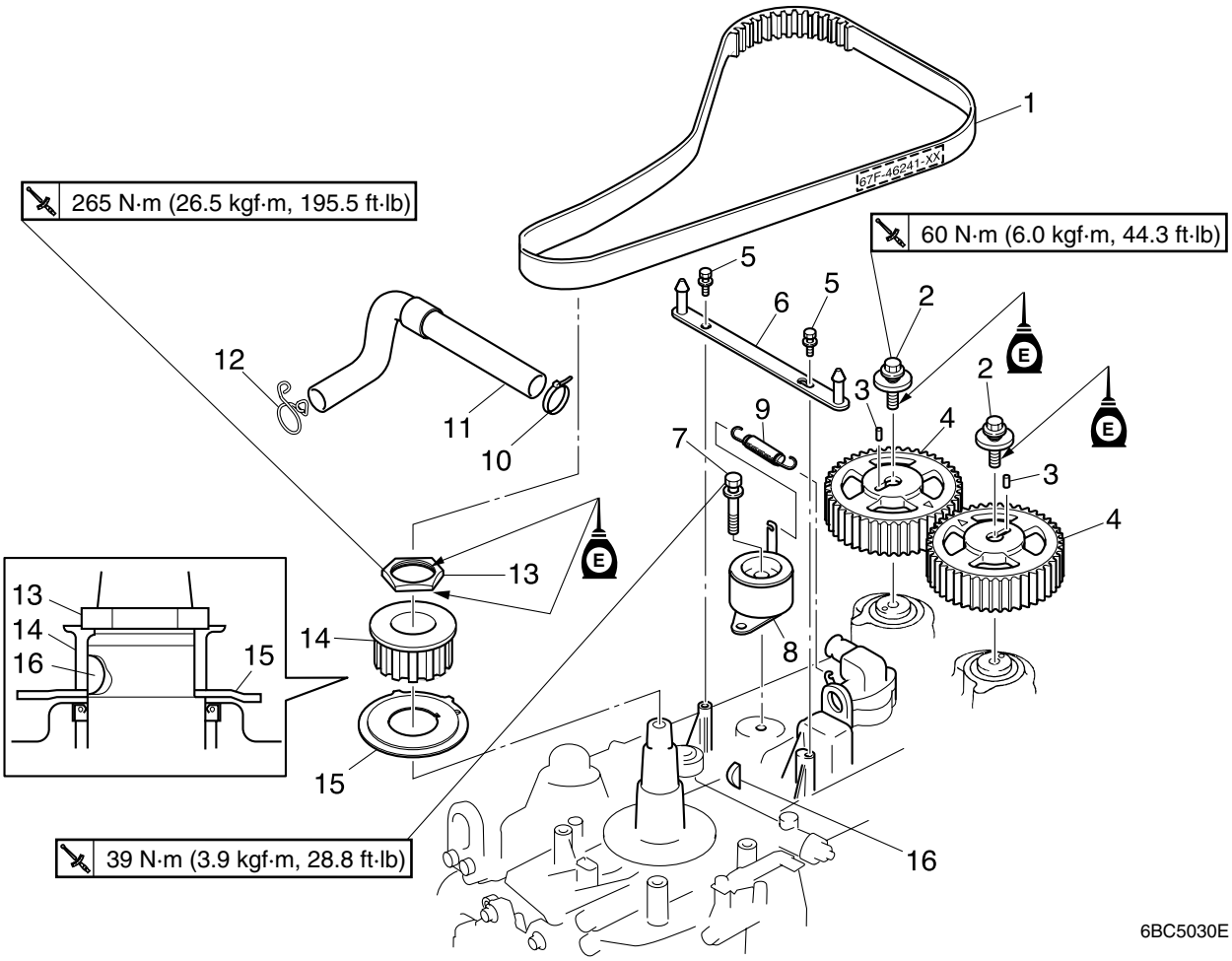

No.	Part name	Q'ty	Remarks
1	Timing belt	1	
2	Bolt	2	M10 × 35 mm
3	Dowel	2	
4	Driven sprocket	2	
5	Bolt	2	M6 × 16 mm
6	Bracket	1	
7	Bolt	1	M10 × 45 mm
8	Timing belt tensioner	1	
9	Spring	1	
10	Plastic tie	1	Not reusable
11	Hose	1	
12	Clamp	1	
13	Nut	1	Width across flats: 46mm
14	Drive sprocket	1	
15	Plate	1	
16	Woodruff key	1	

Ignition coil and starter motor

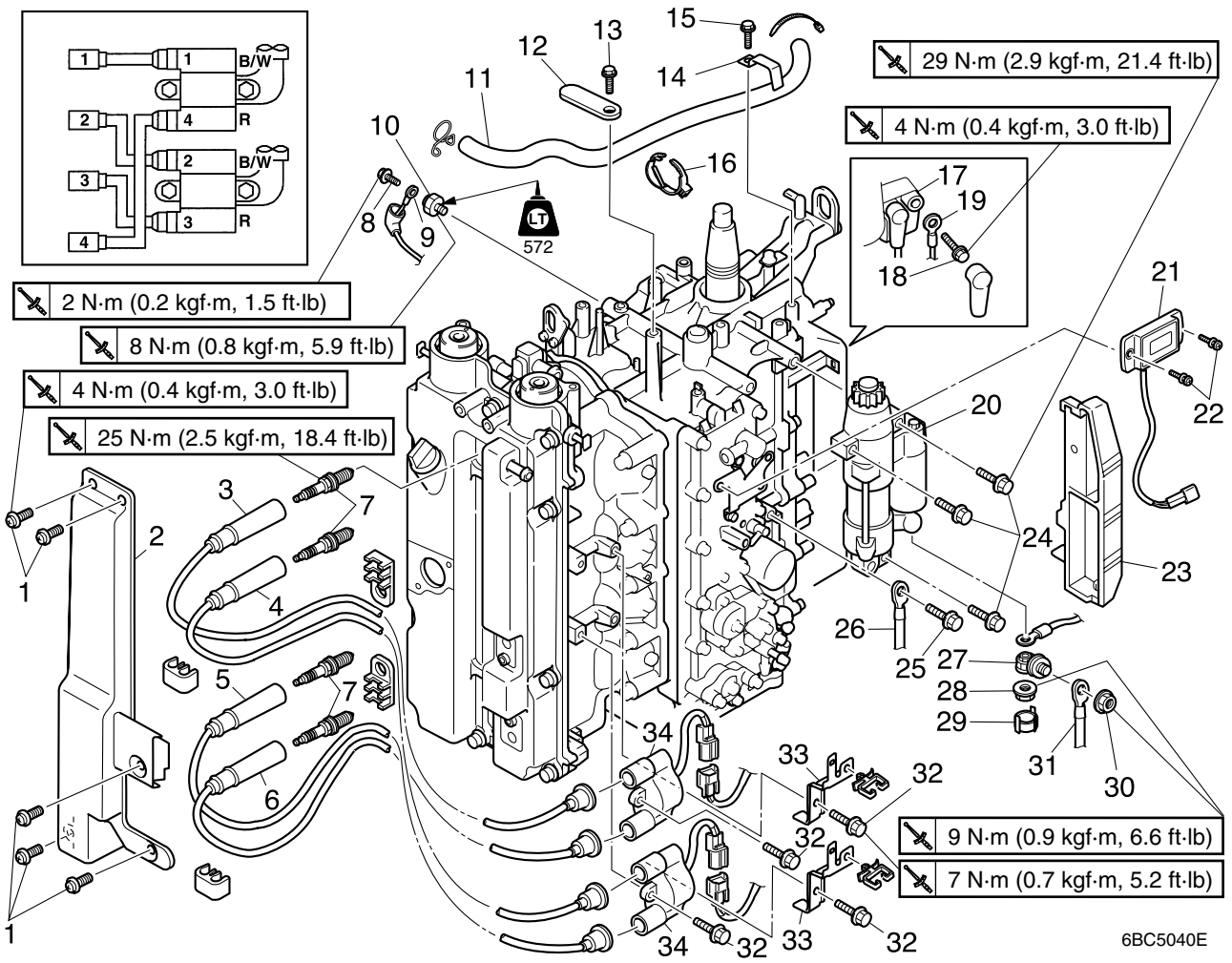

No.	Part name	Q'ty	Remarks
1	Screw	5	ø6 × 20 mm
2	Spark plug wire cover	1	
3	Spark plug wire #1	1	
4	Spark plug wire #2	1	
5	Spark plug wire #3	1	
6	Spark plug wire #4	1	
7	Spark plug	4	LFR5A-11 (NGK)
8	Bolt	1	M4 × 8 mm
9	Oil pressure switch lead	1	
10	Oil pressure switch	1	
11	Blowby hose	1	
12	Holder	1	
13	Bolt	1	M6 × 25 mm
14	Holder	1	
15	Bolt	1	M6 × 12 mm
16	Clamp	1	
17	Starter relay	1	

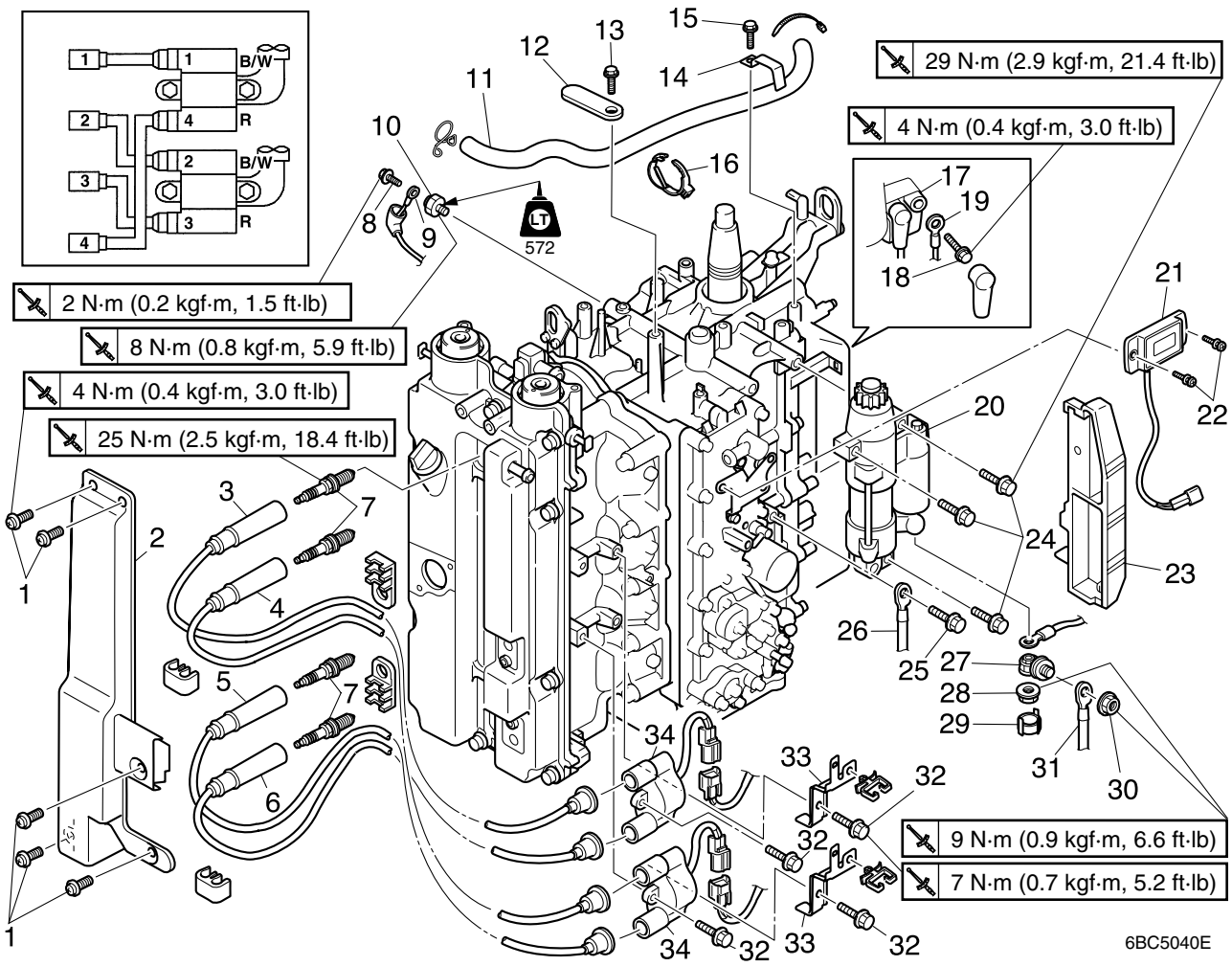

No.	Part name	Q'ty	Remarks
18	Bolt	1	M6 × 10 mm
19	Starter motor lead	1	
20	Starter motor	1	
21	Hour meter	1	
22	Screw	2	ø5 × 14 mm
23	Junction box cover	1	
24	Bolt	3	M8 × 45 mm
25	Bolt	1	M6 × 20 mm
26	Negative battery cable	1	
27	Terminal	1	
28	Nut	1	
29	Cap	1	
30	Nut	1	
31	Positive battery cable	1	
32	Bolt	4	M6 × 25 mm
33	Bracket	2	
34	Ignition coil	2	

Camshaft

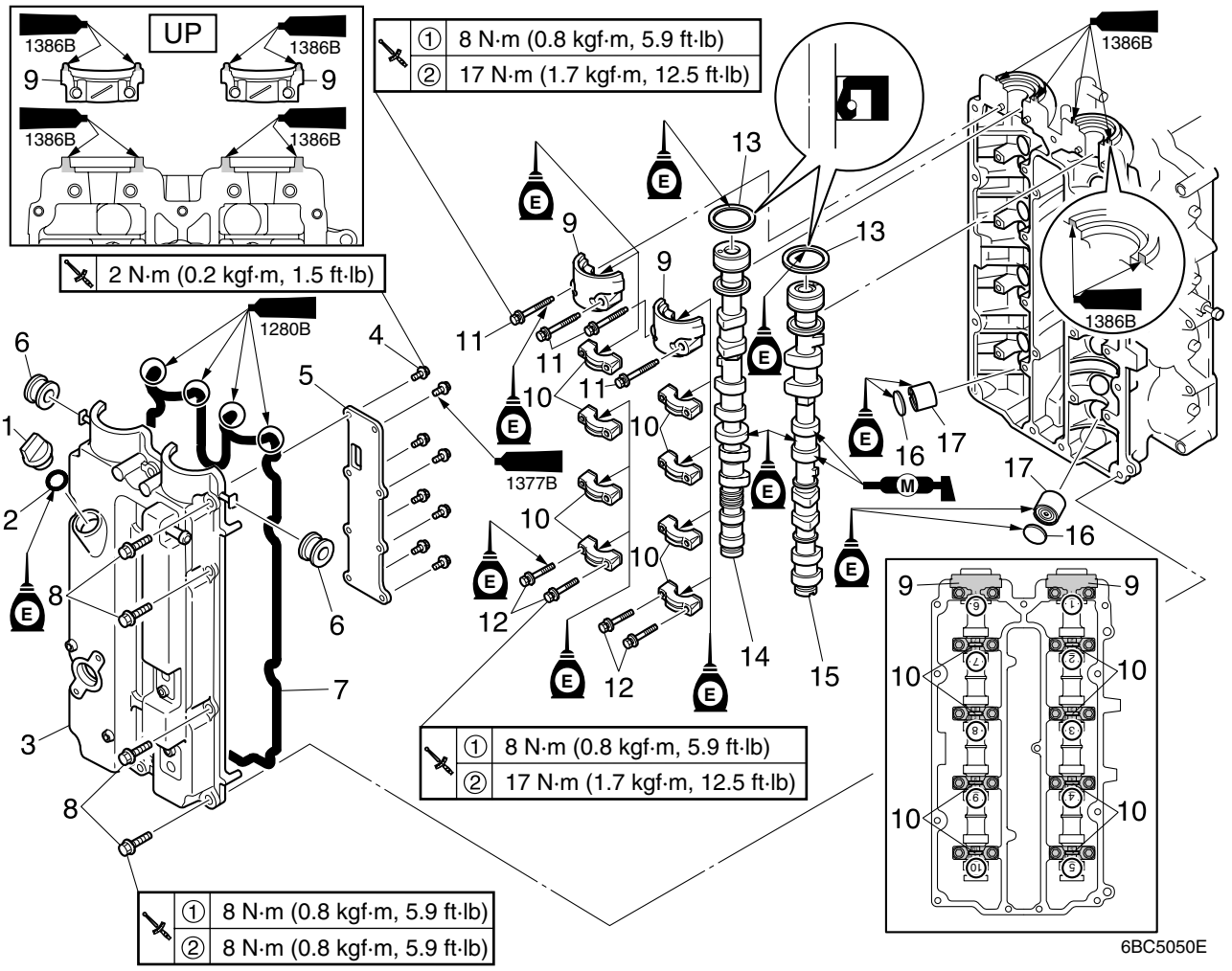

No.	Part name	Q'ty	Remarks
1	Oil filler cap	1	
2	O-ring	1	
3	Cylinder head cover	1	
4	Screw	8	ø4 × 8 mm
5	Plate	1	
6	Grommet	2	
7	Gasket	1	Not reusable
8	Bolt	14	M6 × 30 mm
9	Camshaft cap	2	
10	Camshaft cap	8	
11	Bolt	4	M7 × 48 mm
12	Bolt	16	M7 × 37 mm
13	Oil seal	2	Not reusable
14	Camshaft (IN)	1	
15	Camshaft (EX)	1	
16	Valve shim	16	
17	Valve lifter	16	

Checking the valve clearance

CAUTION:

Do not turn the flywheel magnet or the driven sprockets when the timing belt is not installed unless directed in this manual. Otherwise the pistons and valves or intake and exhaust valves will collide with each other and be damaged.

NOTE:
Measure the valve clearance when the engine is cold.

1. Remove the flywheel magnet cover ① and spark plug wire cover ②.

2. Disconnect the all spark plug wires ③, fuel hoses ④ and blowby hose ⑤.

3. Remove the fuel filter assembly ⑥ and filter ⑦, and then remove the all spark plugs.

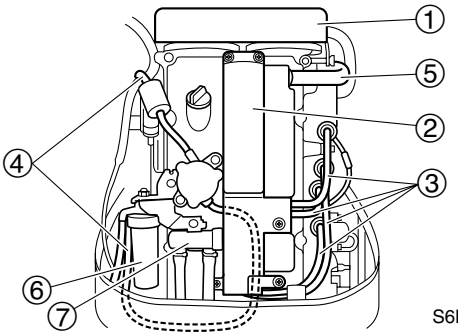

S6D85130

4. Turn the flywheel magnet clockwise and align the "TDC" mark ⓐ on the flywheel magnet with the ignition timing pointer ⓑ. Check that the "▲" marks ⓒ and ⓓ on the driven sprockets are also aligned.

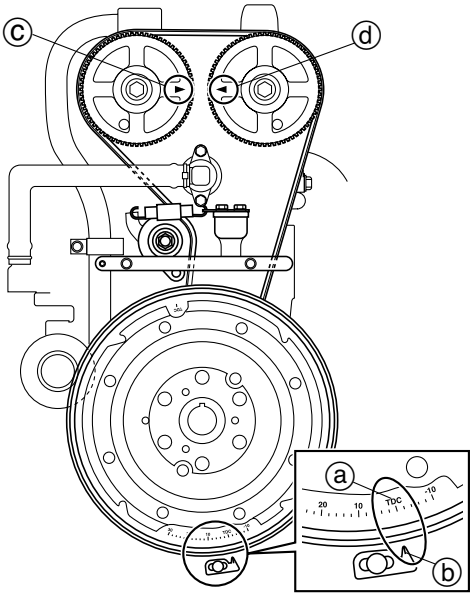

S6D85140

NOTE:
Do not remove the ignition timing pointer.

5. Remove the spring ⑧, timing belt tensioner bolt ⑨, timing belt tensioner, timing belt ⑩, driven sprocket bolts ⑪, driven sprockets ⑫ and cylinder head cover ⑬.

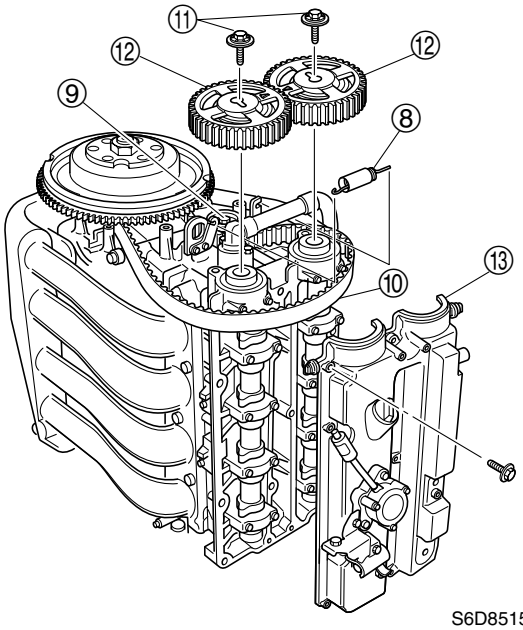

S6D85150

NOTE:
- To remove the timing belt and driven sprockets, see "Removing the timing belt, sprocket and camshaft" (5-20).
- It is not necessary to remove the flywheel magnet when checking the valve clearance.

6. Install the driven sprockets ⑫, timing belt ⑩, timing belt tensioner, timing belt tensioner bolt ⑨, spring ⑧, and then tighten the driven sprocket bolts ⑪ to the specified torque.

NOTE:
- To install the driven sprockets and timing belt, see “Installing the camshaft, sprocket and timing belt” (5-23).
- When checking the valve clearance, be sure not to install the cylinder head cover ⑬.

7. Turn the flywheel magnet clockwise fully twice, and then check that the “TDC” mark ⓐ on the flywheel magnet is aligned with the ignition timing pointer ⓑ. Check that the “▲” marks ⓒ and ⓓ on the driven sprockets are also aligned.

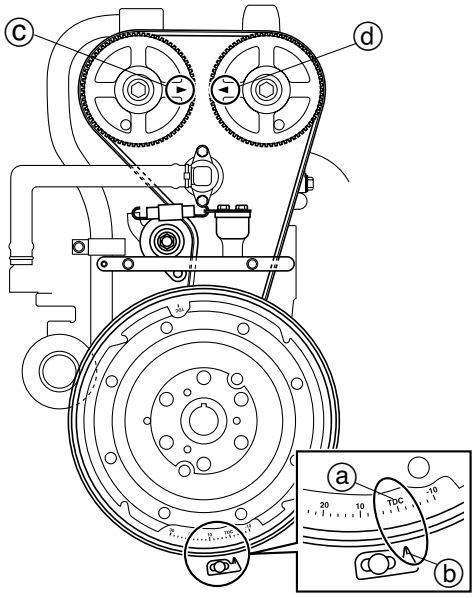

S6D85140

8. Measure the intake valve clearances ⓔ for cylinders #1 and #2, and the exhaust valve clearances ⓕ for cylinders #1 and #3. Adjust if out of specification.

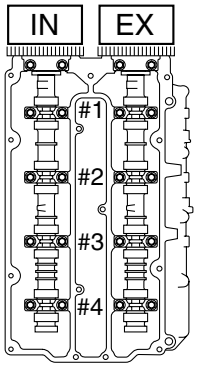

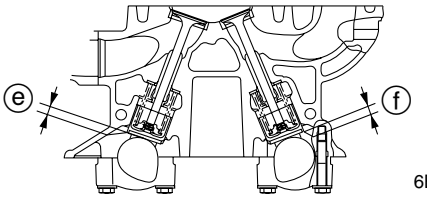

6BC50710

NOTE:
Make a note of each valve clearance numeral.

Valve clearance (cold):
Intake ⓔ:
0.20 ± 0.03 mm (0.008 ± 0.001 in)
Exhaust ⓕ:
0.34 ± 0.03 mm (0.013 ± 0.001 in)

9. Turn the flywheel magnet 360˚ clockwise.

10. Measure the intake valve clearances ⓔ for cylinders #3 and #4, and the exhaust valve clearances ⓕ for cylinders #2 and #4. Adjust if out of specification.

Adjusting the valve clearance

CAUTION:

Do not turn the flywheel magnet or the driven sprockets when the timing belt is not installed unless directed in this manual. Otherwise the pistons and valves or intake and exhaust valves will collide with each other and be damaged.

NOTE:
Adjust the valve clearance when the engine is cold.

1. Turn the flywheel magnet clockwise and align the "TDC" mark ⓐ on the flywheel magnet with the ignition timing pointer ⓑ. Check that the "▲" marks ⓒ and ⓓ on the driven sprockets are also aligned.

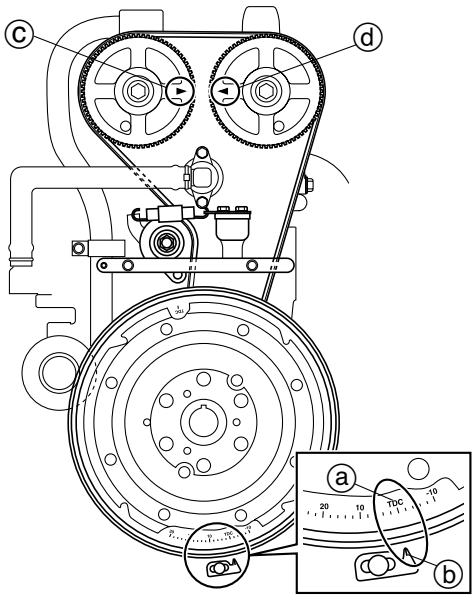

S6D85140

2. Remove the spring, timing belt tensioner bolt, timing belt tensioner, timing belt, driven sprocket bolts, driven sprockets, cylinder head cover, camshaft caps and camshafts.

NOTE:
- To remove the timing belt, driven sprockets and camshafts, see "Removing the timing belt, sprocket and camshaft" (5-20).
- It is not necessary to remove the flywheel magnet when adjusting the valve clearance.

3. Remove the valve lifters with shims from the cylinder head.

NOTE:
- See the exploded diagram (5-7).
- Do not mix the valve train parts. Keep them organized in each group.

4. Remove the valve shim ① from the valve lifter ②.

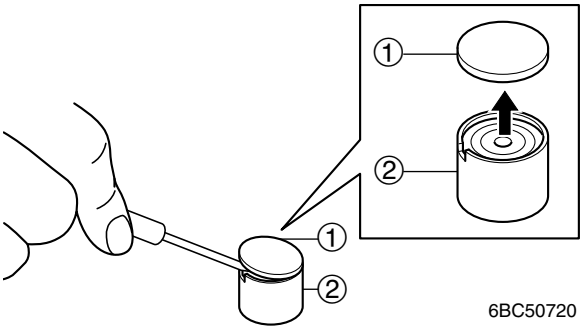

5. Measure the valve shim thickness.

NOTE:
Make a note of each valve clearance numeral.

6. Select the necessary valve shim by calculating its thickness using the following formula.

Necessary valve shim thickness = Removed valve shim thickness + Measured valve clearance – Specified valve clearance

Example:
If the "Removed valve shim thickness" is 2.10 mm, the "Measured valve clearance" is 0.30 mm and the "Specified valve clearance" is 0.20 mm, then the "Necessary valve shim thickness" = 2.10 + 0.30 – 0.20 = 2.20 mm

7. Install the necessary valve shim into the valve lifter.

8. Install the camshafts, driven sprockets, driven sprocket bolts, timing belt, timing belt tensioner, timing belt tensioner bolt and spring.

NOTE:
To install the camshafts, driven sprockets and timing belt, see “Installing the camshaft, sprocket and timing belt” (5-23).

9. Measure each valve clearance. Adjust again if out of specification.

NOTE:
To measure the valve clearance, see “Checking the valve clearance” (5-8).

10. Remove the spring, timing belt tensioner bolt, timing belt tensioner, timing belt, driven sprocket bolts and driven sprockets.

NOTE:
To remove the timing belt and driven sprocket, see “Removing the timing belt, sprocket and camshaft” (5-20).

11. Install the new gasket, cylinder head cover, driven sprockets, driven sprocket bolts, timing belt, timing belt tensioner, timing belt tensioner bolt and spring.

NOTE:
To install the cylinder head cover, driven sprockets and timing belt, see “Installing the timing belt, sprocket and camshaft” (5-23).

Cylinder head cover bolt:
1st: 8 N·m (0.8 kgf·m, 5.9 ft·lb)
2nd: 8 N·m (0.8 kgf·m, 5.9 ft·lb)
Driven sprocket bolt:
60 N·m (6.0 kgf·m, 44.3 ft·lb)

12. Install the all spark plugs and all parts removed during disassembly.

NOTE:
To route the hoses and wirings, see “Hose routing” (4-4) and “Electrical component and wiring harness routing” (8-7).

Spark plug:
25 N·m (2.5 kgf·m, 18.4 ft·lb)

Replacing the timing belt

1. Remove the flywheel magnet cover and spark plug wire cover.

2. Disconnect the all spark plug wires, and then remove the all spark plugs.

3. Turn the flywheel magnet clockwise and align the “TDC” mark ⓐ on the flywheel magnet with the ignition timing pointer ⓑ. Check that the “▲” marks ⓒ and ⓓ on the driven sprockets are also aligned.

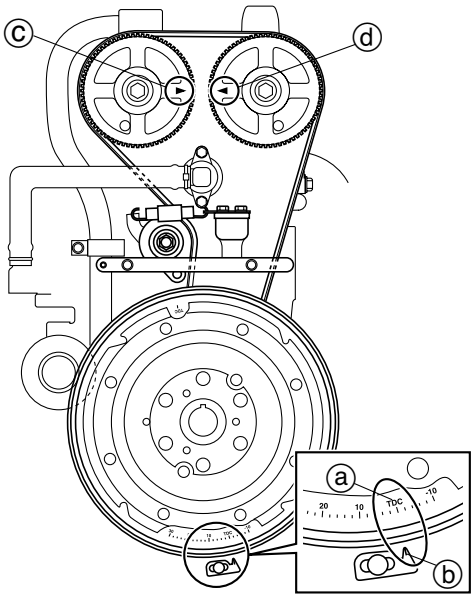

S6D85140

4. Loosen the flywheel magnet nut.

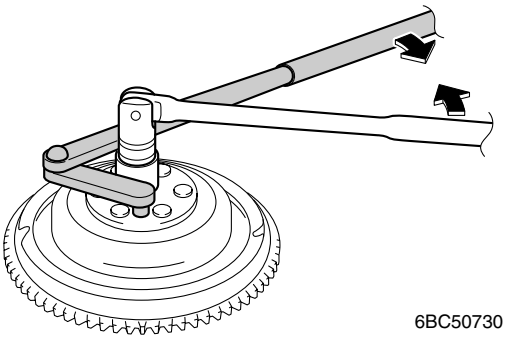

CAUTION:

Apply force in the direction of the arrows shown to prevent the flywheel holder from slipping off easily.

NOTE:

Use a 36 mm socket to loosen the flywheel magnet nut.

Flywheel holder: 90890-06522

5. Remove the flywheel magnet and Woodruff key.

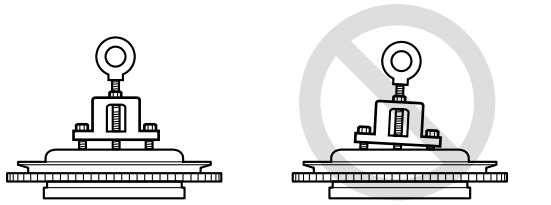

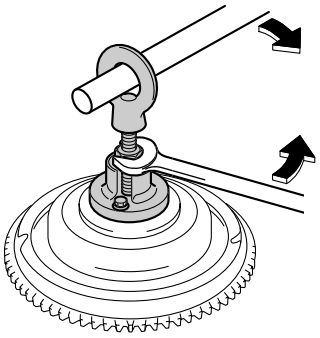

CAUTION:

To prevent damage to the engine or tools, screw in the puller set bolts evenly and completely so that the flywheel puller is parallel to the flywheel magnet.

NOTE:

Apply force to the crankshaft end until the flywheel magnet comes off the tapered portion of the crankshaft.

Flywheel puller: 90890-06521

5

6. Remove the base assembly bolts ①, and then remove the base assembly ②.

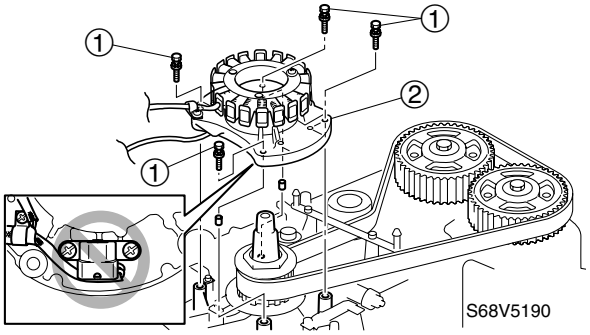

CAUTION:

Do not loosen the pulser coil assembly screws, otherwise the pulser coil air gap cannot be readjusted to proper setting.

7. Replace the timing belt.

NOTE:

To replace the timing belt, see “Removing the timing belt, sprocket and camshaft” (5-20) and “Installing the camshaft, sprocket and timing belt” (5- 23).

8. Install the base assembly, and then tighten the base assembly bolts ①.

9. Install the Woodruff key ③, and then install the flywheel magnet ④.

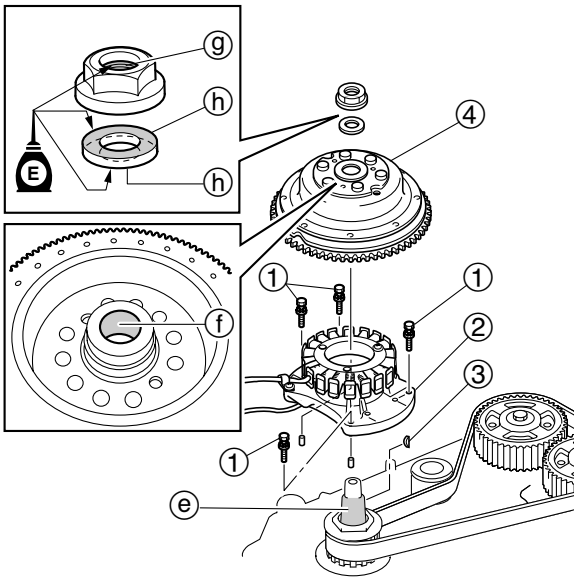

NOTE:

- Be sure to remove any grease from the tapered portion ⓔ of the crankshaft and the inner surface ⓕ of the flywheel magnet.
- Apply engine oil to the thread ⓖ of the flywheel magnet nut and upper and lower surfaces ⓗ of the washer before installation.

10. Tighten the flywheel magnet nut to the specified torque.

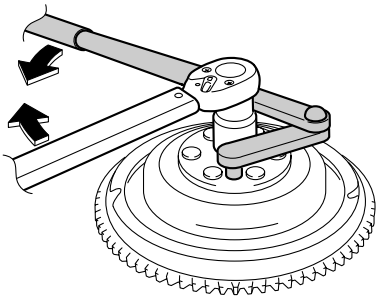

	Flywheel holder: 90890-06522

	Flywheel magnet nut: 215 N·m (21.5 kgf·m, 158.6 ft·lb)

Power unit

Power unit assembly

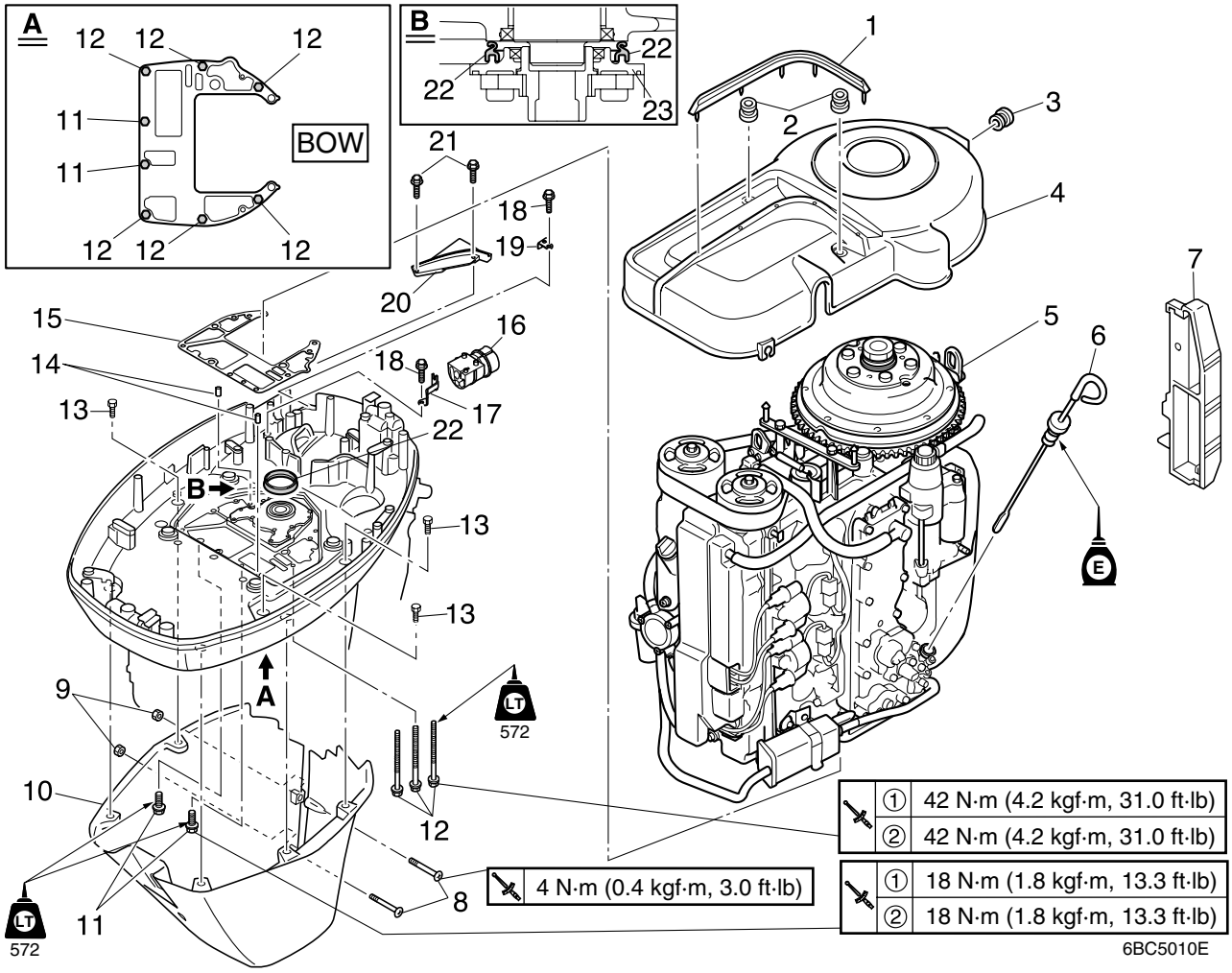

No.	Part name	Q'ty	Remarks
1	Damper	1	
2	Grommet	2	
3	Grommet	1	
4	Flywheel magnet cover	1	
5	Power unit	1	
6	Oil dipstick	1	
7	Junction box cover	1	
8	Screw	2	ø6 × 40 mm
9	Nut	2	
10	Apron	1	
11	Bolt	2	M8 × 35 mm
12	Bolt	6	M10 × 130 mm
13	Bolt	5	M6 × 16 mm
14	Dowel	2	
15	Gasket	1	Not reusable
16	Grommet	1	
17	Cable holder	1	

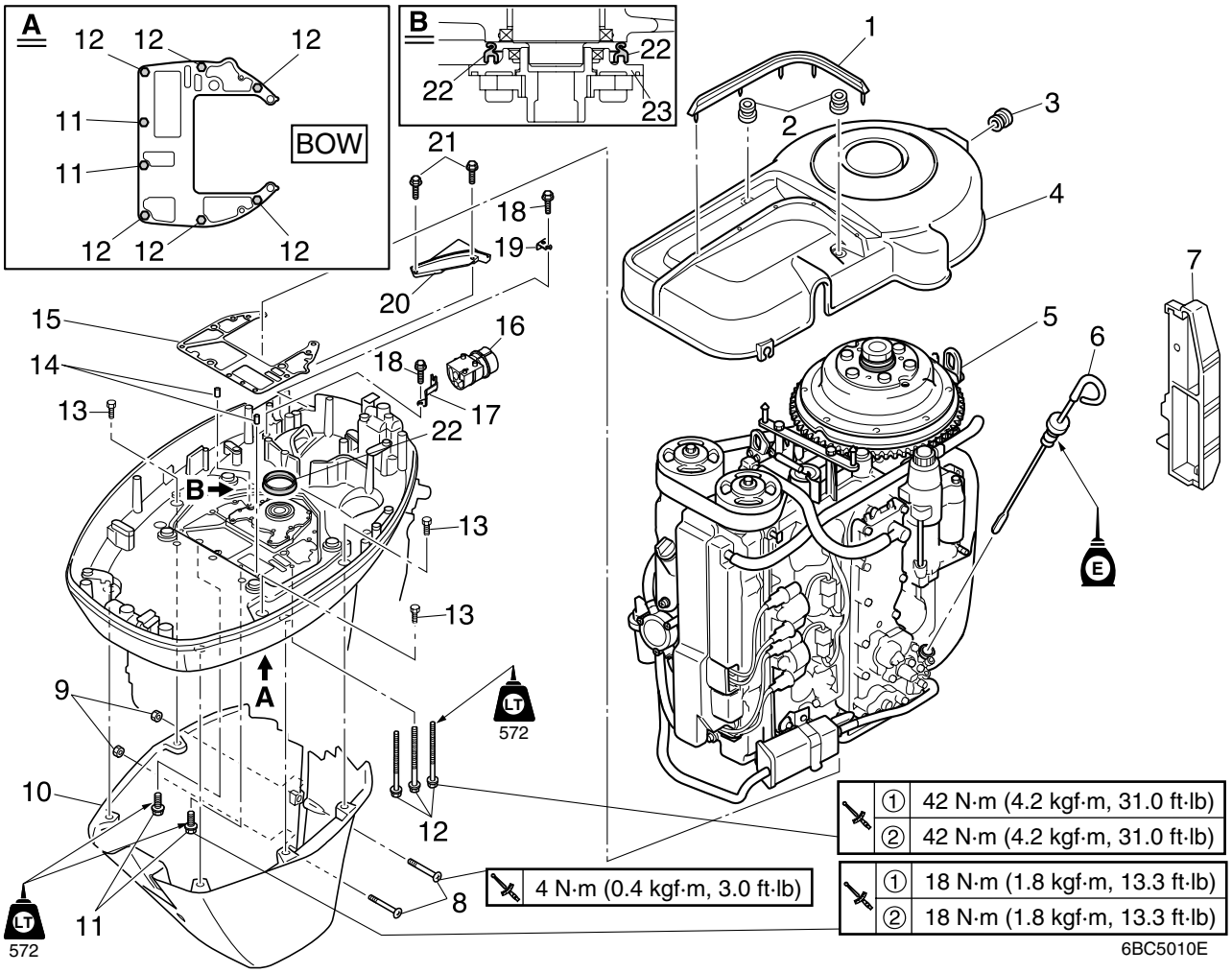

No.	Part name	Q'ty	Remarks
18	Bolt	2	M6 × 20 mm
19	Grommet holder	1	
20	Retaining plate	1	
21	Bolt	2	M6 × 25 mm
22	Rubber seal	1	Not reusable
23	Oil pump assembly	1	

ECM

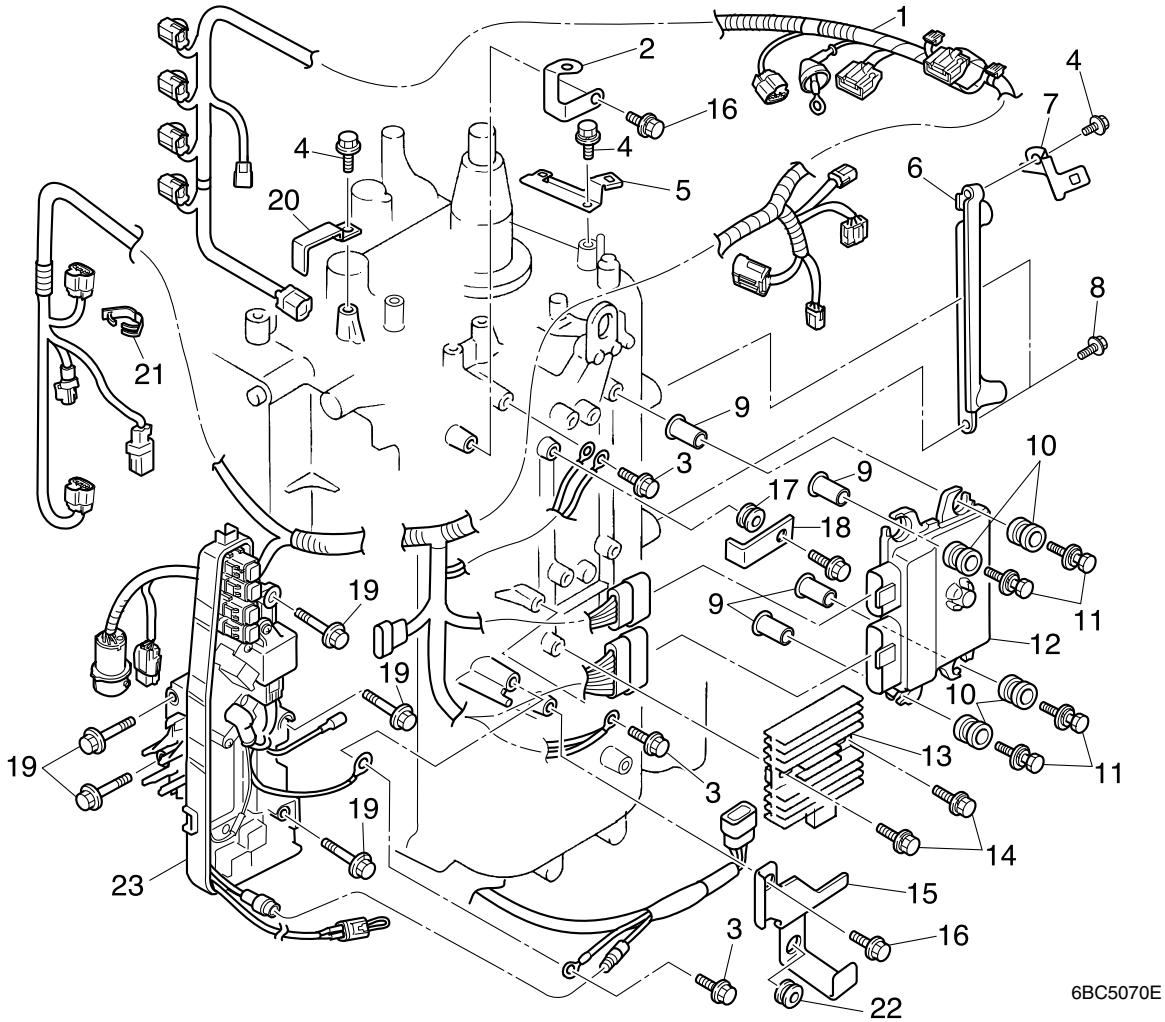

No.	Part name	Q'ty	Remarks
1	Wiring harness	1	
2	Bracket	1	
3	Bolt	3	M6 × 16 mm : ground
4	Bolt	3	M6 × 12 mm
5	Bracket	1	
6	Bracket	1	
7	Bracket	1	
8	Bolt	2	M6 × 20 mm
9	Collar	4	
10	Grommet	4	
11	Bolt	4	M6 × 28 mm
12	ECM	1	
13	Rectifier Regulator	1	
14	Bolt	2	M6 × 25 mm
15	Bracket	1	
16	Bolt	2	M6 × 14 mm
17	Grommet	1	

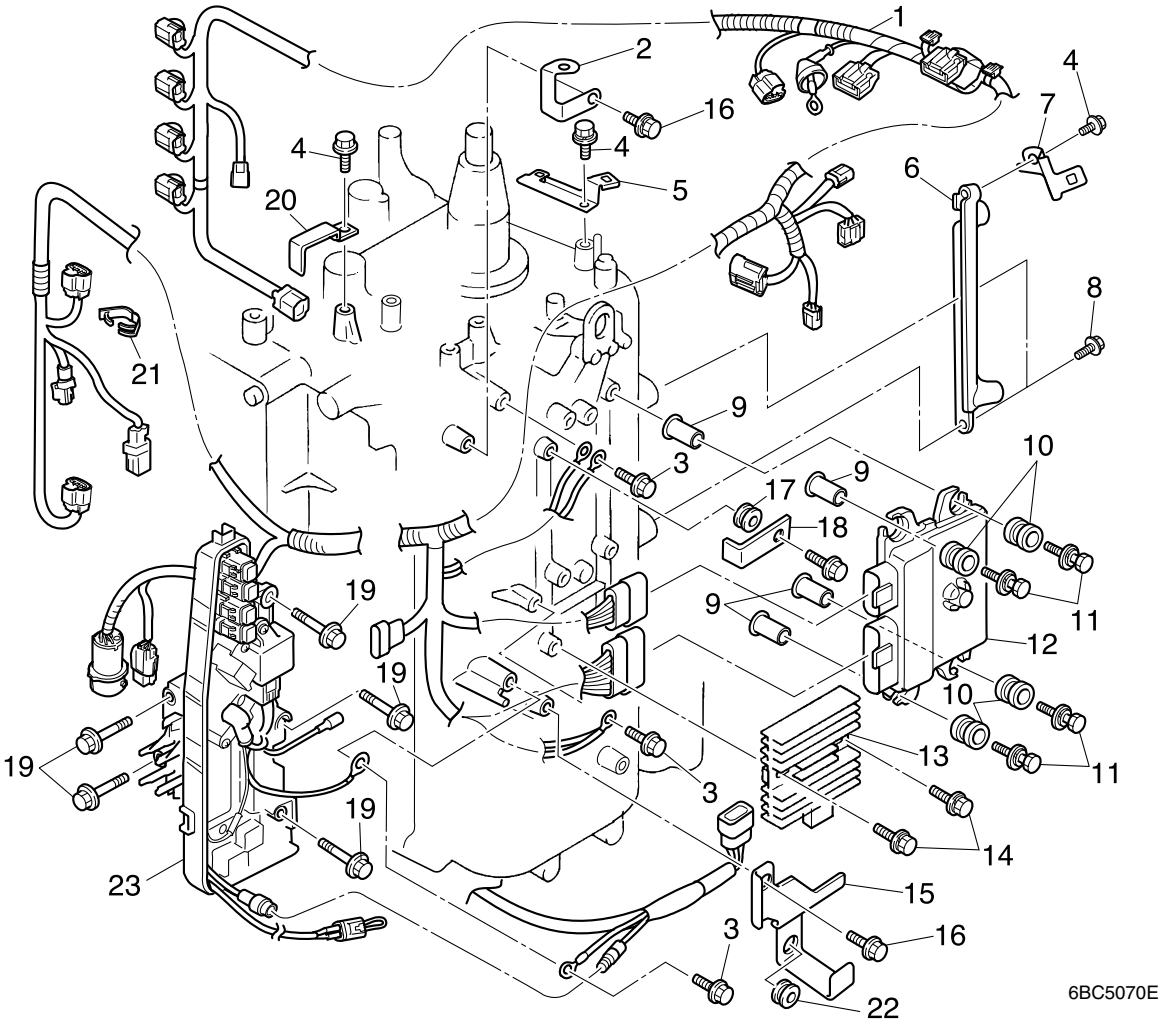

No.	Part name	Q'ty	Remarks
18	Bracket	1	
19	Bolt	5	M6 × 28 mm
20	Holder	1	
21	Clamp	1	
22	Grommet	1	
23	Junction box	1	

Junction box

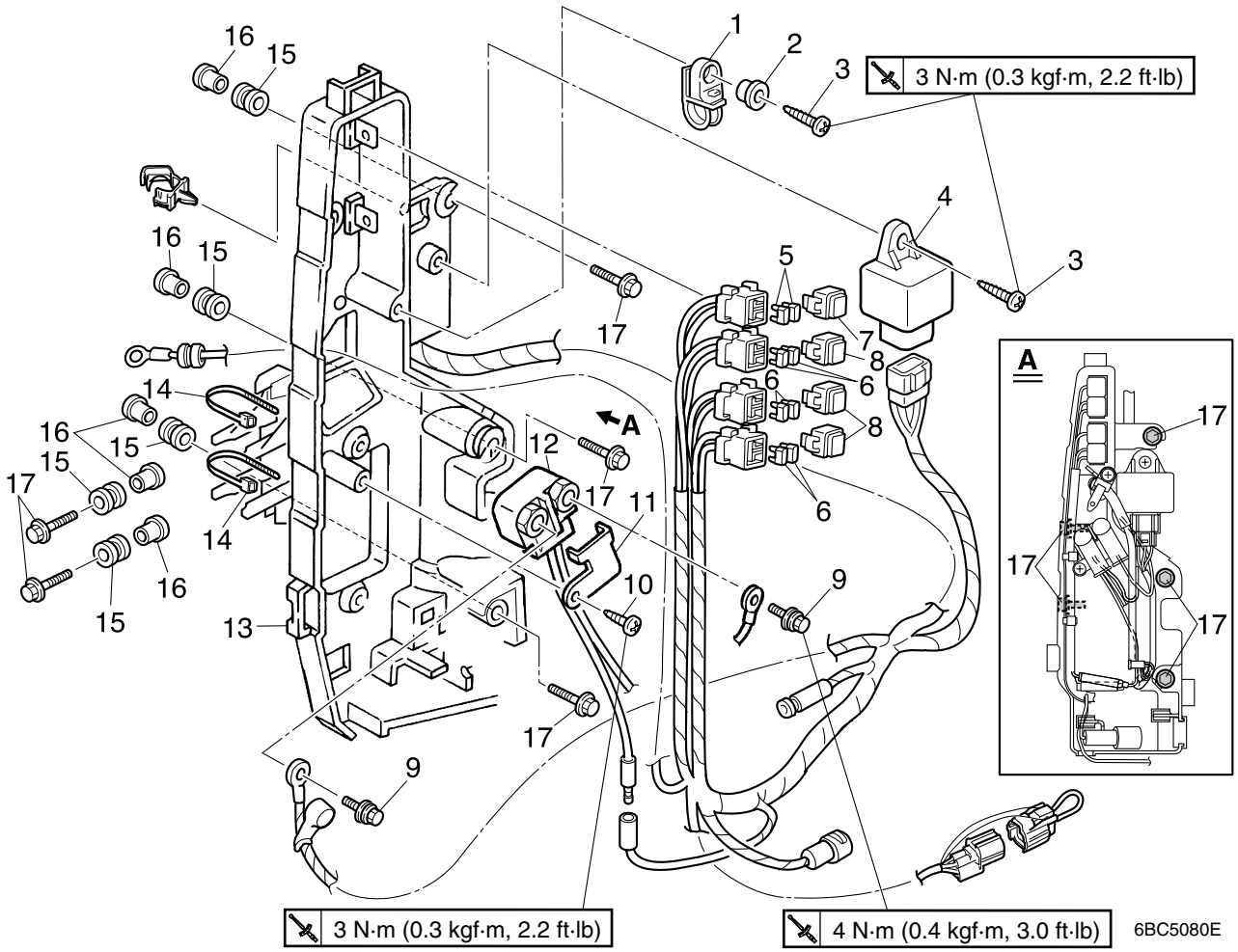

No.	Part name	Q'ty	Remarks
1	Clamp	1	
2	Collar	1	
3	Screw	2	ø6 × 25 mm
4	Main/high-pressure fuel pump relay	1	
5	Fuse	2	30 A, Spare is included
6	Fuse	6	20 A, Spare is included
7	Cap	1	Green
8	Cap	3	Yellow
9	Bolt	1	M6 × 10 mm
10	Screw	1	ø6 × 20 mm
11	Holder	1	
12	Starter relay	1	
13	Junction box	1	
14	Plastic tie	2	
15	Grommet	5	
16	Collar	5	
17	Bolt	5	M6 × 28 mm

Removing the power unit

NOTE:
- It is recommended to loosen the flywheel magnet nut before removing the power unit to improve working efficiency.
- Disconnect the battery cable from the battery terminal and disconnect the fuel hose from the fuel hose joint.
- Drain the engine oil.

1. Remove the retaining plate ①, grommet holder ②, cable holder ③ and grommet ④, and then disconnect the throttle cable and shift cable.

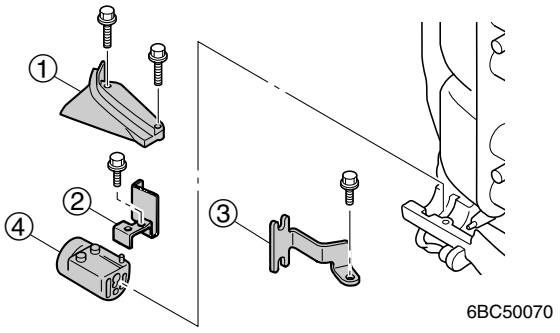

2. Disconnect the battery cables ⑤, 10-pin main harness coupler ⑥ and warning indicator coupler ⑦.

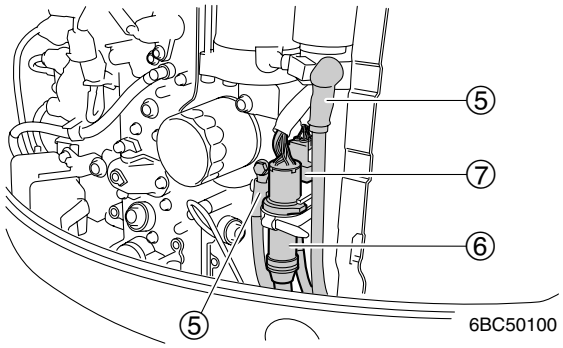

NOTE:
Warning indicator lead comes from the warning indicator assembly or the tachometer.

3. Remove the plate ⑧, and then remove the 10-pin main harness ⑨, battery cable, warning indicator lead ⑩, flushing hose, YDIS communication lead, speedometer hose and canister hose from the guide.

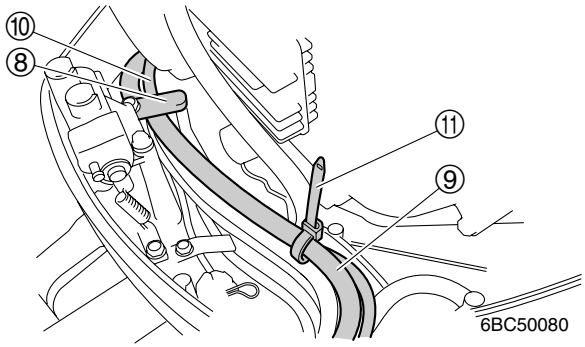

NOTE:
- Remove the junction box cover, before removing the wiring harness.
- Remove the plastic tie ⑪. (tiller handle model)

4. Remove the plastic tie or clamp, and then disconnect the cooling water hose ⑫, canister hose ⑬ and flushing hose ⑭.

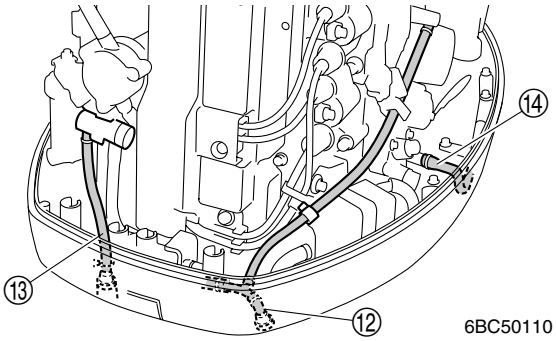

5. Remove the plastic tie, and then disconnect the fuel hose ⑮ from the fuel filter assembly ⑯. Then disconnect the shift position switch coupler ⑰.

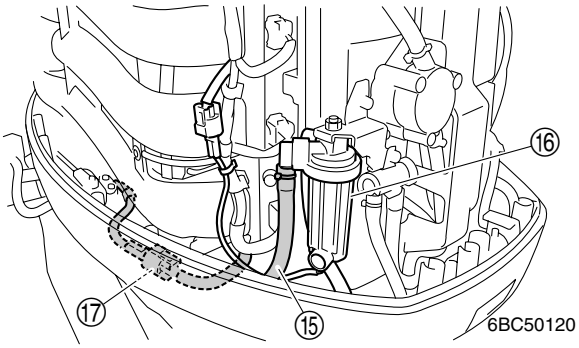

6. Remove the oil dipstick.

7. Remove the apron nuts, apron screw and apron ⑱.

8. Remove the power unit mounting bolts ⑲, ⑳, and then remove the power unit, dowels ㉑ and gasket ㉒.

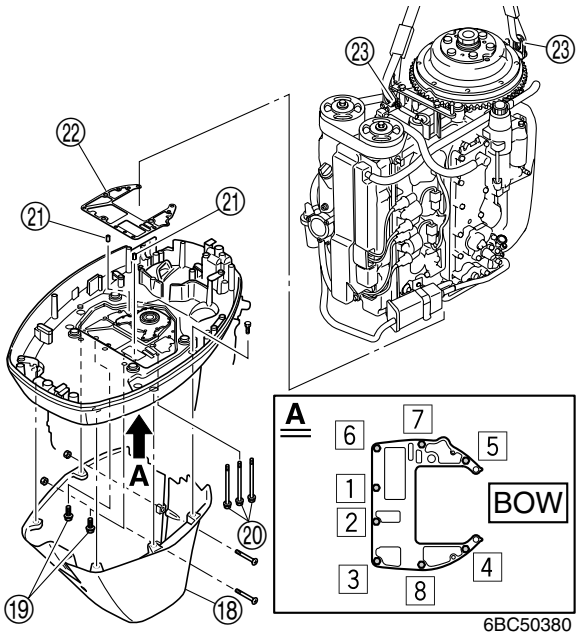

CAUTION:

Do not scratch or damage the mating surface of the cylinder block, crankcase and upper case.

NOTE:

Suspend the power unit from the engine hangers ㉓.

Removing the timing belt, sprocket and camshaft

1. Remove the flywheel magnet and base assembly.

NOTE:

To remove the flywheel magnet and base assembly, see “Replacing the timing belt” (5-11).

2. Align the hole ⓐ in the retaining plate with the projection ⓑ on the cylinder block. Check that the “▲” marks ⓒ and ⓓ on the driven sprockets are also aligned.

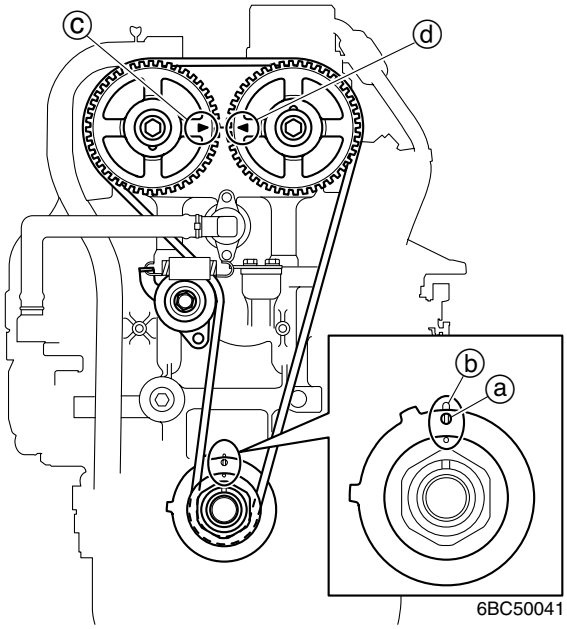

5

3. Disconnect the cooling water hose ①, and then remove the bracket ②.

4. Remove the spring ③, timing belt tensioner bolt ④ and timing belt tensioner ⑤, and then remove the timing belt ⑥ from the driven sprockets, then from the drive sprocket.

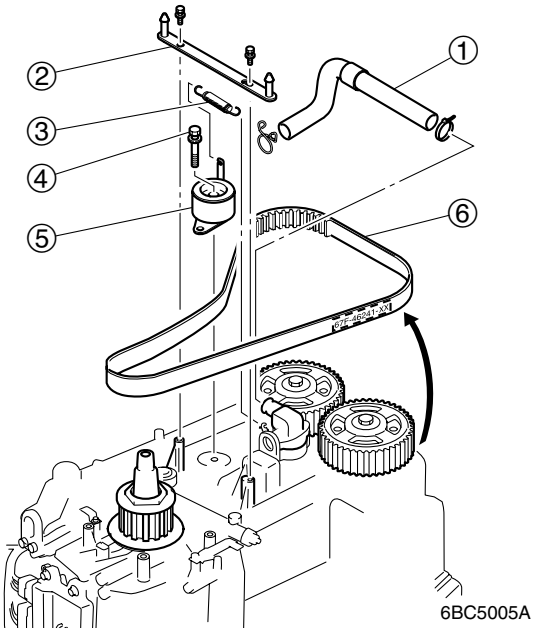

CAUTION:

Do not turn the drive sprocket or the driven sprockets when the timing belt is not installed unless directed in this manual. Otherwise the pistons and valves or intake and exhaust valves will collide with each other and be damaged.

5. Align the hole ⓐ in the retaining plate with the mating surface ⓔ of the crankcase and cylinder block by turning the crankshaft counterclockwise 90° gradually.

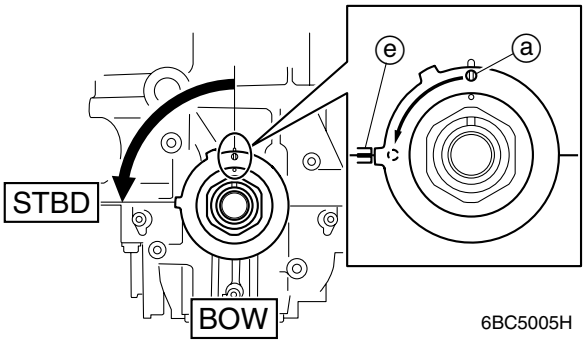

CAUTION:

Do not turn the crankshaft counterclockwise more than 90°. Otherwise the piston and valves will collide with each other and be damaged.

6. Hold the driven sprockets using the special service tool ⑦, and then loosen the driven sprocket bolts ⑧. Then remove the driven sprockets ⑨.

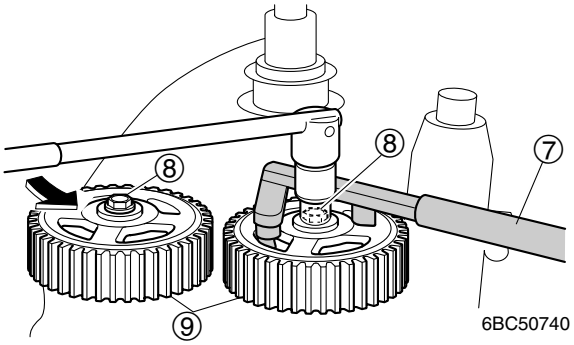

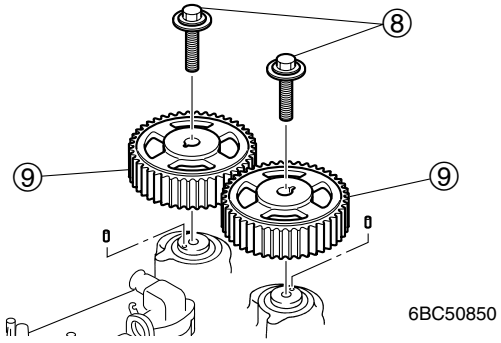

NOTE:

Make sure that the driven sprockets do not turn when loosening the driven sprocket bolts.

	Flywheel holder ⑦: 90890-06522

7. Remove the cylinder head cover, and then remove the camshaft caps in the sequence shown.

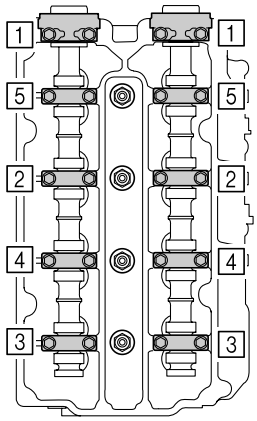

S68V5440

8. Remove the camshaft (IN) ⑩, camshaft (EX) ⑪ and oil seals ⑫.

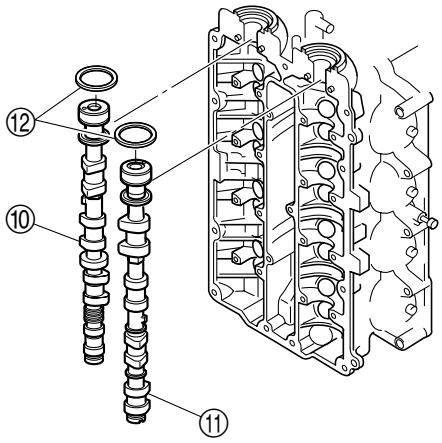

S68V5450

9. Remove the valve lifters with shims from the cylinder head.

NOTE:
- See the exploded diagram (5-7).
- Do not mix the valve train parts. Keep them organized in each group.

Checking the timing belt and sprocket

1. Check the interior and exterior of the timing belt. Replace the timing belt if cracked, damaged or worn.

2. Check the driven sprockets. Replace the if cracked, damaged or worn.

3. Check the drive sprocket. Replace the if cracked, damaged or worn.

NOTE:
To remove and install the drive sprocket, see “Disassembling the cylinder block” (5-43) and “Assembling the cylinder block” (5-54).

5

Checking the camshaft

1. Measure the cam lobe. Replace the camshaft if out of specification.

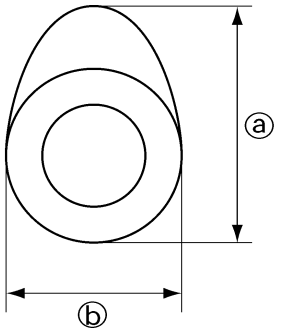

S69J5950

Cam lobe ⓐ:
Intake:
36.48–36.58 mm
(1.4362–1.4402 in)
Exhaust:
36.90–37.06 mm
(1.4528–1.4591 in)
Cam lobe ⓑ:
Intake:
29.95–30.05 mm
(1.1791–1.1831 in)
Exhaust:
29.92–30.08 mm
(1.1780–1.1842 in)

2. Measure the camshaft runout. Replace if above specification.

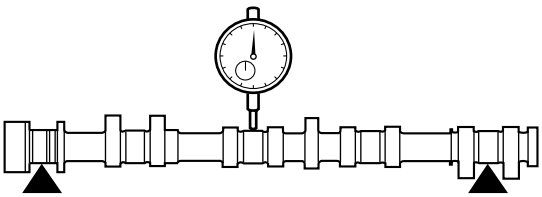

S68V5470

Camshaft runout limit:
0.03 mm (0.0012 in)

3. Measure the all camshaft journal diameter ⓒ and all camshaft cap inside diameter ⓓ. Replace the camshaft or cylinder head assembly or both if out of specification.

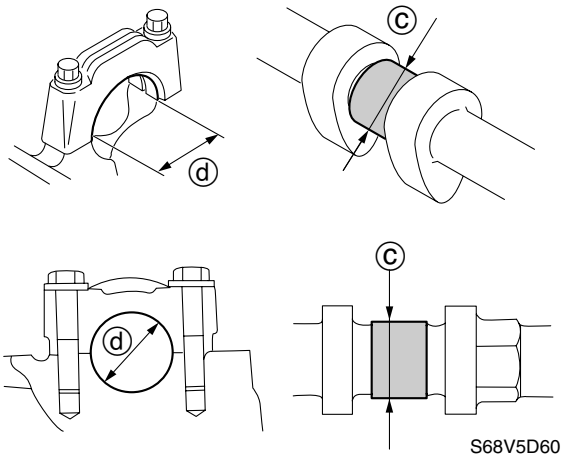

S68V5D60

Camshaft journal diameter ⓒ:
24.960–24.980 mm
(0.9827–0.9835 in)
Camshaft cap inside diameter ⓓ:
25.000–25.021 mm
(0.9843–0.9851 in)

Installing the camshaft, sprocket and timing belt

CAUTION:

Do not turn the drive sprocket or the driven sprockets when the timing belt is not installed unless directed in this manual. Otherwise the pistons and valves or intake and exhaust valves will collide with each other and be damaged.

1. Check that the hole ⓐ in the retaining plate and the mating surface ⓑ of the crankcase and cylinder block are aligned.

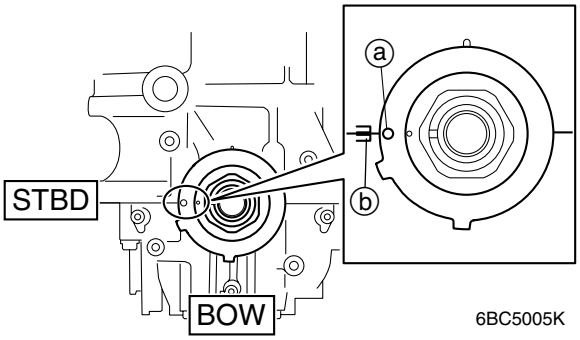

2. Install the valve lifters with shims onto the cylinder head.

NOTE:
- Apply engine oil to the valve shims and valve lifters before installation.
- Install the valve shims and valve lifters in their original positions.
- See the exploded diagram (5-7).

3. Apply a thin, even coat of sealant to the mating surface of the camshaft caps ① and cylinder head ② as shown.

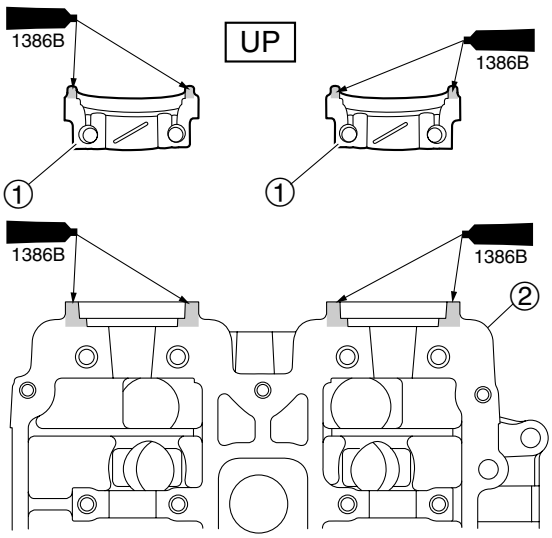

NOTE:
When applying the sealant, be sure not to block the oil passages or oil holes and do not apply it to the cylinder head camshaft journals.

4. Install the camshaft (IN) ③ and camshaft (EX) ④ with the new oil seals ⑤.

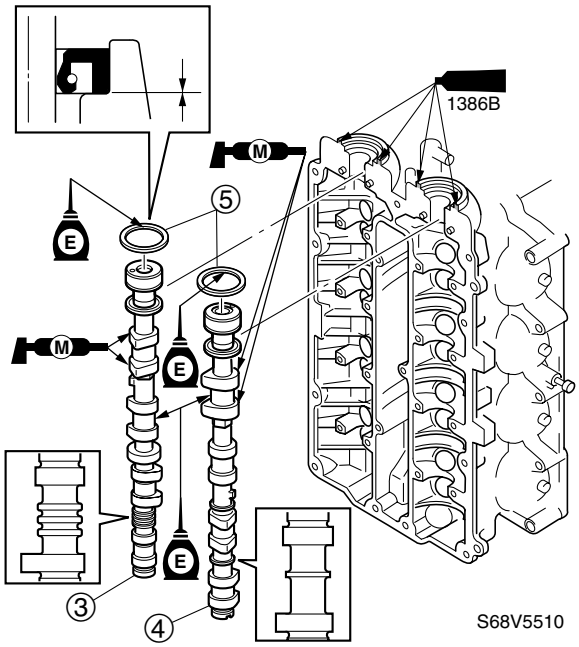

NOTE:
- Apply molybdenum disulfide grease to the cam lobes.
- Be sure to install the camshafts in the proper positions.

5. Check that the camshaft dowel holes ⓒ are in the positions shown.

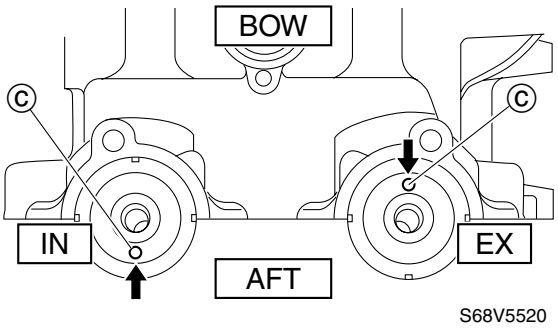

6. Install the camshaft caps ① in their proper positions as shown and with the stamped numbers upside down.

7. Tighten the camshaft cap bolts ⑥ to the specified torque in 2 stages and in the sequence shown.

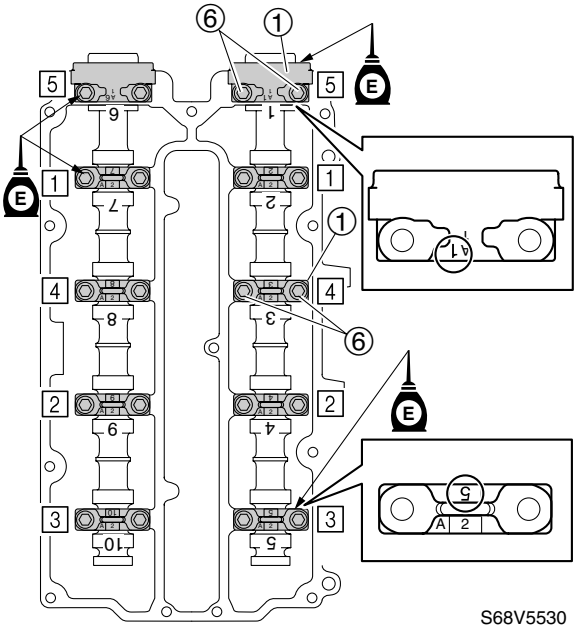

NOTE:
Apply engine oil to the camshaft caps ① and camshaft cap bolts ⑥ before installation.

	Camshaft cap bolt ⑥: 1st: 8 N·m (0.8 kgf·m, 5.9 ft·lb) 2nd: 17 N·m (1.7 kgf·m, 12.5 ft·lb)

8. Install the new cylinder head cover gasket ⑦ and cylinder head cover ⑧, and then tighten the cylinder head cover bolts ⑨ to the specified torque in 2 stages.

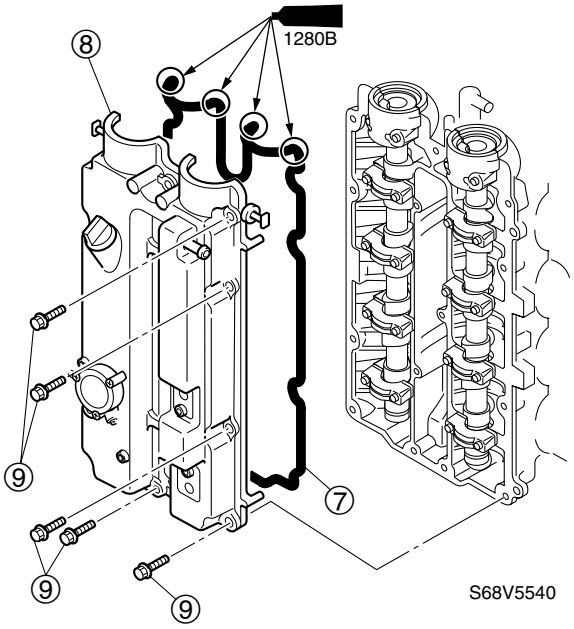

NOTE:
Apply sealant as shown.

	Cylinder head cover bolt ⑨: 1st: 8 N·m (0.8 kgf·m, 5.9 ft·lb) 2nd: 8 N·m (0.8 kgf·m, 5.9 ft·lb)

9. Install the driven sprockets ⑩, and then install the driven sprocket bolts ⑪.

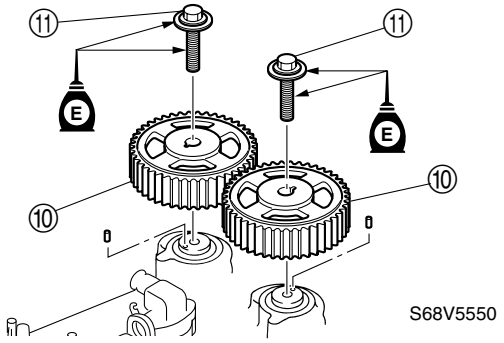

NOTE:
- Apply engine oil to the driven sprocket bolts ⑪ before installation.
- Check that the dowels are installed as shown.

10. Hold the driven sprockets using the special service tool ⑫, and then tighten the driven sprocket bolts ⑪ to the specified torque.

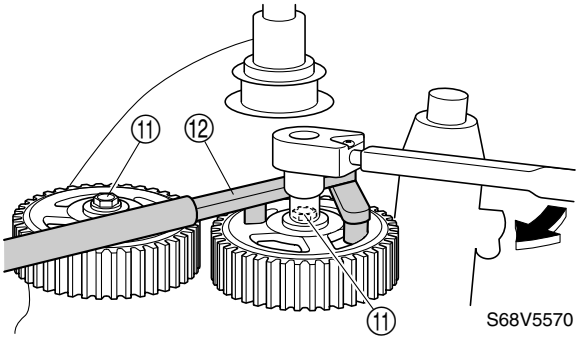

NOTE:
Make sure the driven sprockets do not turn when tightening the driven sprocket bolts.

	Flywheel holder ⑫: 90890-06522

	Driven sprocket bolt ⑪: 60 N·m (6.0 kgf·m, 44.3 ft·lb)

11. Check that the "▲" marks ⓓ and ⓔ on the driven sprockets are aligned.

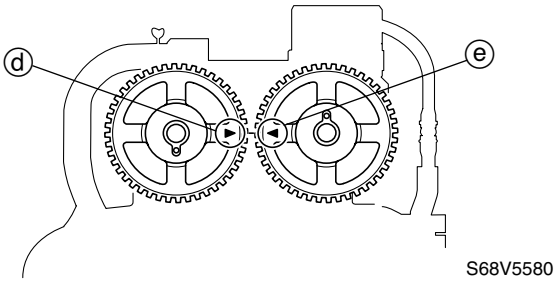

12. Align the hole ⓐ in the retaining plate with the projection ⓕ on the cylinder block by turning the crankshaft clockwise 90° gradually.

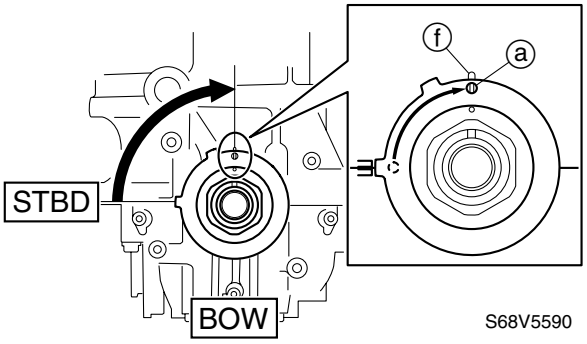

CAUTION:
Do not turn the crankshaft clockwise more than 90°. Otherwise the piston and valves will collide with each other and be damaged.

13. Install the timing belt tensioner ⑫ and timing belt tensioner bolt ⑬.

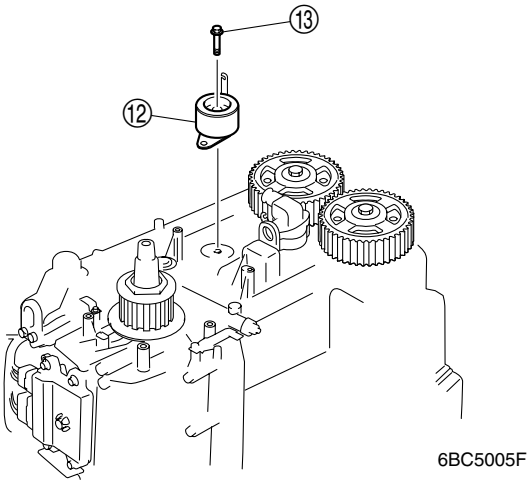

NOTE:
Temporarily tighten the timing belt tensioner bolt ⑬, and then loosen it approximately 90°.

5

14. Install the timing belt ⑭ onto the drive sprocket, and then install it onto the driven sprockets. Then install the spring ⑮.

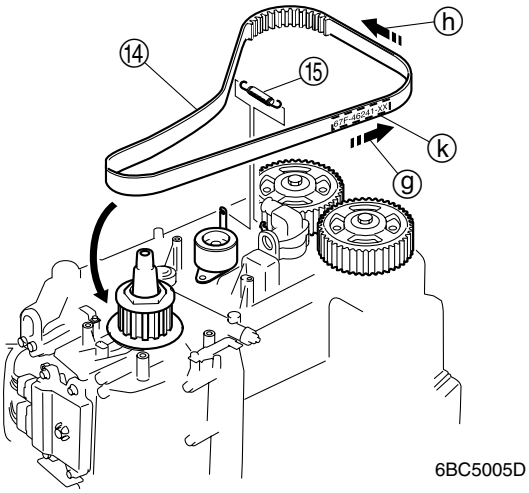

CAUTION:

- **Do not twist, turn inside out or bend the timing belt beyond the maximum limit of 25 mm (1.0 in), otherwise it can be damaged.**
- **Do not get oil or grease on the timing belt.**

NOTE:

- When installing the timing belt, pull it from ⓖ to ⓗ direction so that there is no slack.
- Install the timing belt with its part number ⓚ in the upright position.

15. Turn the drive sprocket clockwise fully twice, and then check that the hole ⓐ in the retaining plate is aligned with the projection ⓕ on the cylinder block. Check that the "▲" marks ⓓ and ⓔ on the driven sprockets are also aligned.

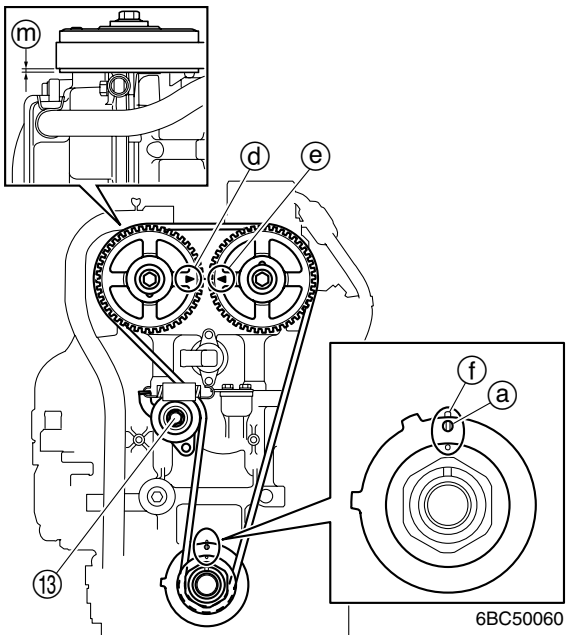

NOTE:

- The lower edge of the timing belt should be 2 mm (0.08 in) ⓜ from the bottom of the driven sprockets.
- Check that the timing belt has no slack.

16. Tighten the timing belt tensioner bolt ⑬ to the specified torque.

	Timing belt tensioner bolt ⑬: 39 N·m (3.9 kgf·m, 28.8 ft·lb)

17. Install the bracket ⑯ and cooling water hose ⑰.

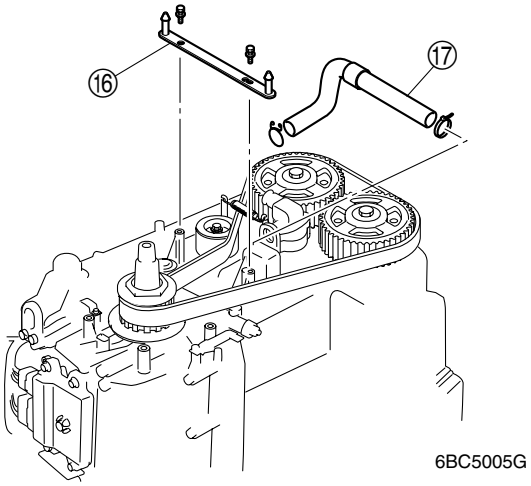

18. Install the base assembly and flywheel magnet.

NOTE:
To install the base assembly and flywheel magnet, see “Replacing the timing belt” (5-11).

19. Install the all spark plugs and all parts removed during disassembly.

NOTE:
To route the hoses and wirings, see “Hose routing” (4-7) and “Electrical component and wiring harness routing” (8-7).

	Spark plug: 25 N·m (2.5 kgf·m, 18.4 ft·lb)

5

Cylinder head

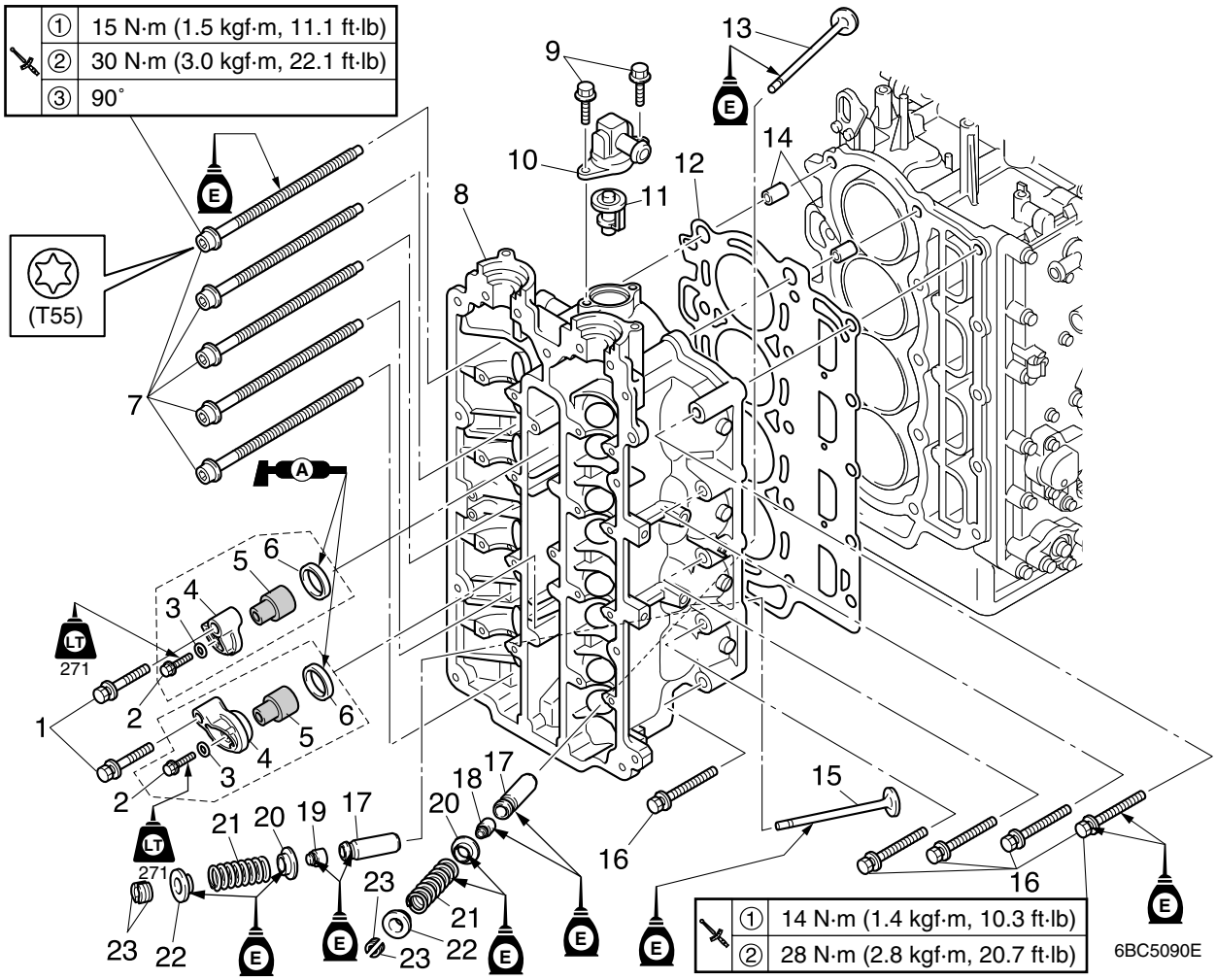

No.	Part name	Q'ty	Remarks
1	Bolt	2	M8 × 40 mm
2	Bolt	2	M6 × 20 mm
3	Gasket	2	Not reusable
4	Anode cover	2	
5	Anode	2	
6	Grommet	2	
7	Bolt	10	M10 × 143 mm/T55
8	Cylinder head	1	
9	Bolt	2	M6 × 25 mm
10	Thermostat Cover	1	
11	Thermostat	1	
12	Gasket	1	Not reusable
13	Exhaust valve	8	
14	Collar	2	
15	Intake valve	8	
16	Bolt	5	M8 × 55 mm
17	Valve guide	16	Not reusable

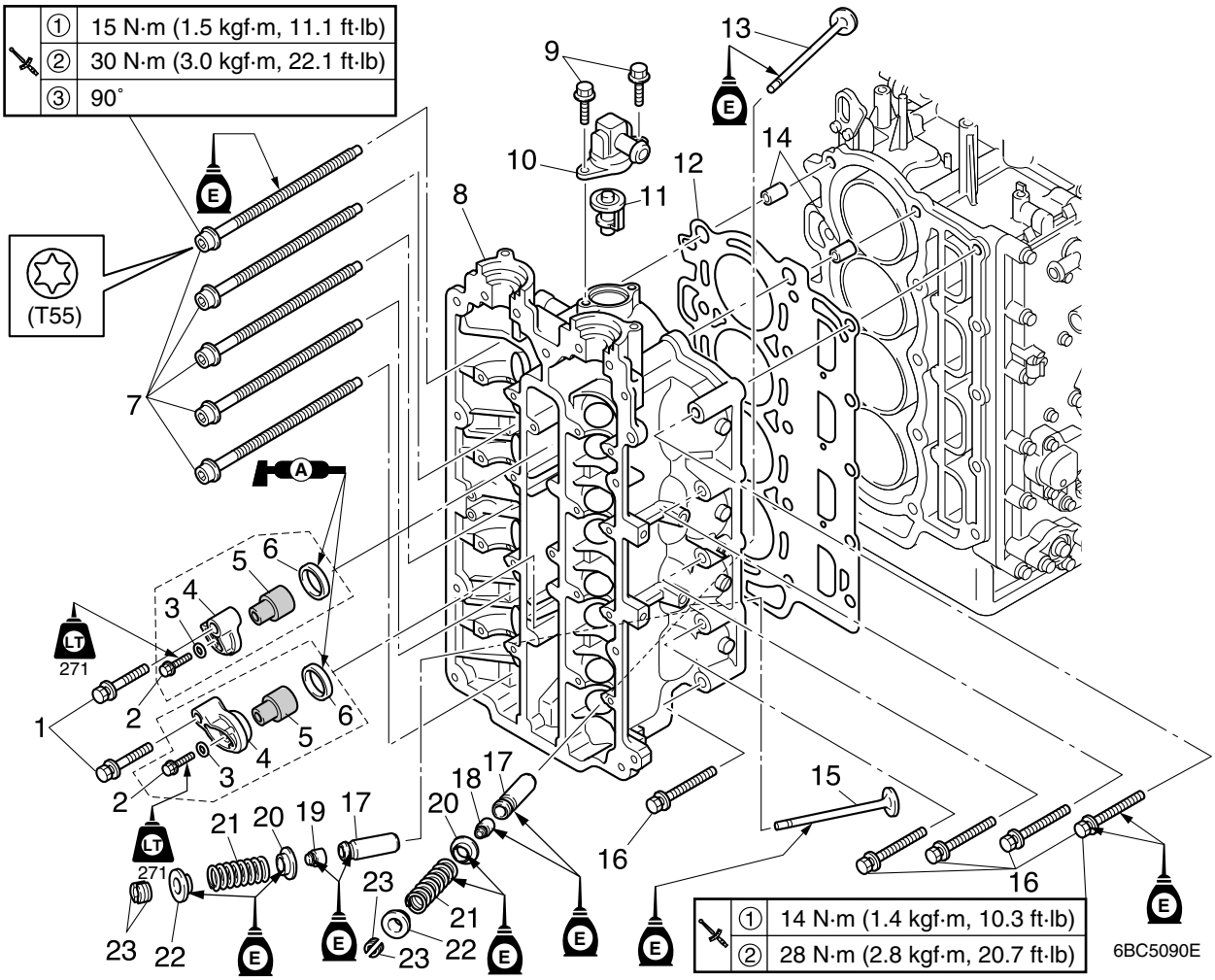

No.	Part name	Q'ty	Remarks
18	Valve seal (EX)	8	Not reusable
19	Valve seal (IN)	8	Not reusable
20	Valve spring seat	16	
21	Valve spring	16	
22	Valve spring retainer	16	
23	Valve cotter	32	

Removing the cylinder head

1. Remove the spring, timing belt tensioner, timing belt, driven sprockets, cylinder head cover, camshafts and valve lifters with shims.

NOTE:

To remove the timing belt, driven sprockets and camshafts, see “Removing the timing belt, sprocket and camshaft” (5-20).

2. Remove the cylinder head bolts ① and ② in the sequence shown, and then remove the cylinder head and cylinder head gasket.

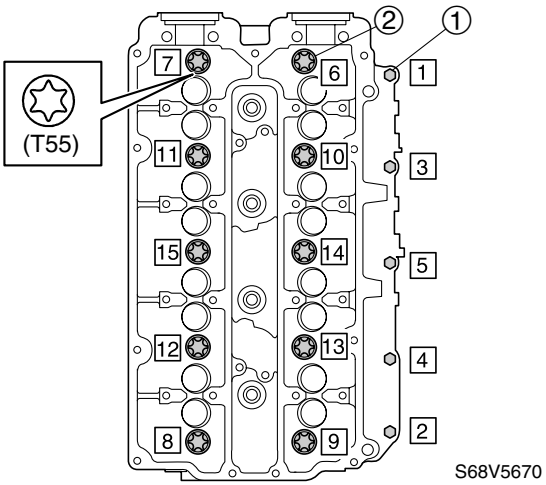

CAUTION:

Do not scratch or damage the mating surfaces of the cylinder head and cylinder block.

3. Remove the intake and exhaust valves from the cylinder head.

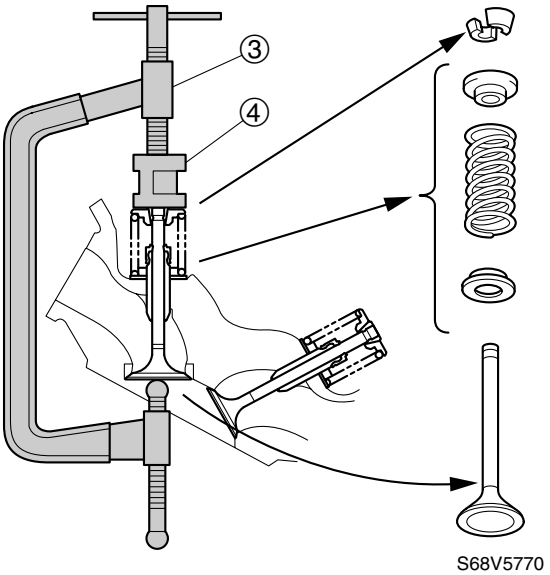

NOTE:

Do not mix the valve train parts. Keep them organized in each group.

Valve spring compressor ③:
90890-04019
Valve spring compressor attachment ④: 90890-06320

Checking the valve spring

1. Measure the valve spring free length ⓐ. Replace if below specification.

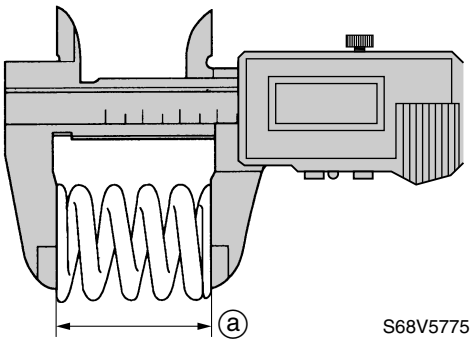

Valve spring free length ⓐ (reference data):
50.54 mm (1.9898 in)

2. Measure the valve spring tilt ⓑ. Replace if above specification.

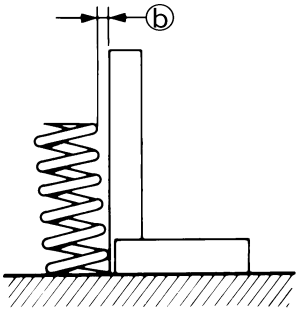

S69J5730

Valve spring tilt limit ⓑ:
2.6 mm (0.10 in)

Checking the valve

1. Check the valve face. Replace if pitted or worn.

2. Measure the valve margin thickness ⓐ. Replace if out of specification.

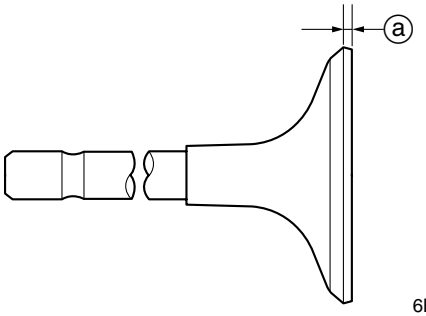

6BC50250

Valve margin thickness ⓐ:
Intake:
0.80–1.20 mm (0.0315–0.0472 in)
Exhaust:
1.00–1.40 mm (0.0394–0.0551 in)

3. Measure the valve stem diameter ⓑ. Replace if out of specification.

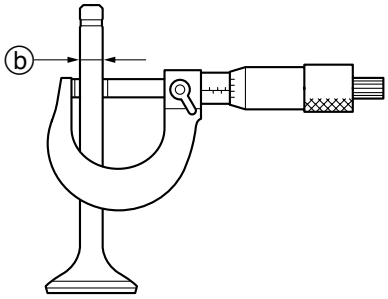

6BC50260

Valve stem diameter ⓑ:
Intake:
5.975–5.990 mm
(0.2352–0.2358 in)
Exhaust:
5.960–5.975 mm
(0.2346–0.2352 in)

4. Measure the valve stem runout. Replace if above specification.

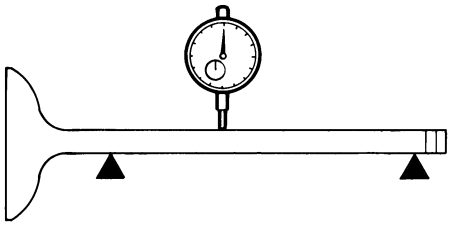

6BC50770

Valve stem runout limit:
0.01 mm (0.0004 in)

5

Checking the valve guide

NOTE:
Before checking the valve guides, make sure that the valve stem diameter is within specification.

1. Measure the valve guide inside diameter ⓐ.

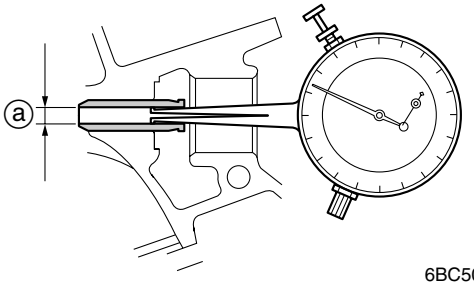

6BC50270

Valve guide inside diameter ⓐ:
Intake and exhaust:
6.000–6.018 mm
(0.2362–0.2369 in)

2. Calculate the valve stem-to-valve guide clearance. Replace if out of specification.

Valve stem-to-valve guide clearance = valve guide inside diameter – valve stem diameter (reference data):
Intake:
0.010–0.043 mm
(0.0004–0.0017 in)
Exhaust:
0.025–0.058 mm
(0.0010–0.0023 in)

Replacing the valve guide

NOTE:
After replacing a valve guide, check the valve seat contact area. To check the valve seat contact area, see “Checking the valve seat” (5-34).

1. Remove the valve guide ① using the special service tool from the combustion chamber side.

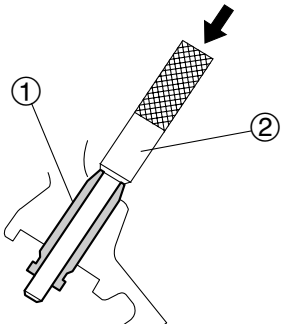

S6AG5181

Valve guide remover/installer ②:
90890-04064

2. Install a new valve guide ③ using the special service tool from the camshaft side to the specified height ⓐ.

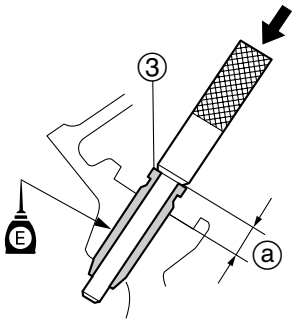

S6AG5180

NOTE:
Apply engine oil to the outer surface of a new valve guide before installation.

Valve guide remover/installer:
90890-04064

Valve guide installation height ⓐ:
Intake and exhaust:
11.5 ± 0.2 mm (0.45 ± 0.01 in)

3. Insert the special service tool ④ into the valve guide ③, and then ream the valve guide.

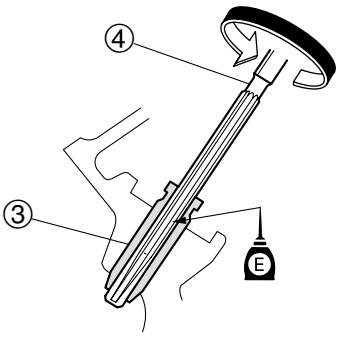

S6AG5190

NOTE:
- Apply engine oil to the inner surface of the valve guide ③ before reaming it.
- Turn the valve guide reamer ④ clockwise to ream the valve guide.
- Do not turn the reamer ④ counterclockwise when removing it.
- Be sure to clean the valve guide after reaming it.

Valve guide reamer ④:
90890-04066

4. Measure the valve guide inside diameter.

Valve guide inside diameter:
Intake and exhaust:
6.000–6.018 mm
(0.2362–0.2369 in)

Checking the valve seat

1. Eliminate carbon deposits from the valves.

2. Apply a thin, even layer of Mechanic's blueing dye (Dykem) onto the valve seat.

3. Press the valve slowly against the valve seat with a valve lapper as shown.

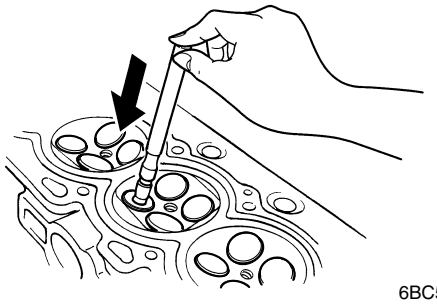

6BC50750

4. Measure the valve seat contact width ⓐ where the blueing dye is adhered to the valve face. Reface the valve seat if the valve is not seated properly or if the valve seat contact width is out of specification. Check the valve guide if the valve seat contact is uneven.

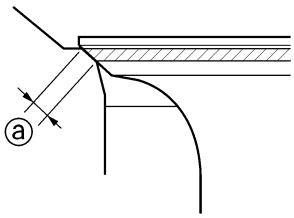

S69J5830

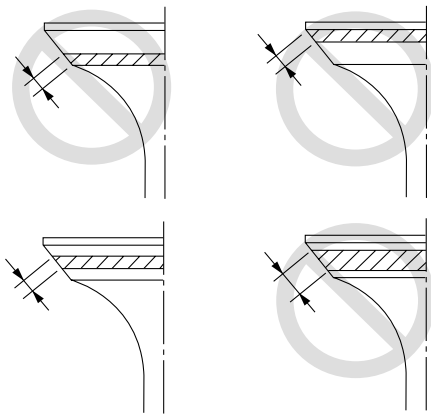

S68V5720

Valve seat contact width ⓐ:
Intake and exhaust:
1.20–1.60 mm (0.0472–0.0630 in)

Refacing the valve seat

1. Reface the valve seat with the valve seat cutters.

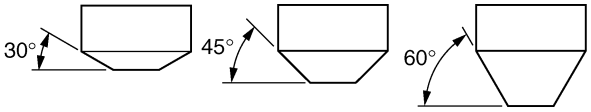

S69J5850

Valve seat cutter holder:
90890-06553
Valve seat cutter:
30˚ (IN): 90890-06818
30˚ (EX): 90890-06328
45˚ (IN): 90890-06555
45˚ (EX): 90890-06312
60˚ (IN): 90890-06324
60˚ (EX): 90890-06315

2. Cut the surface of the valve seat with a 45˚ cutter by turning the cutter clockwise until the valve seat face has become smooth.

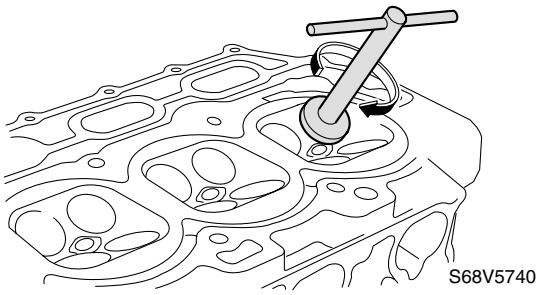

S68V5740

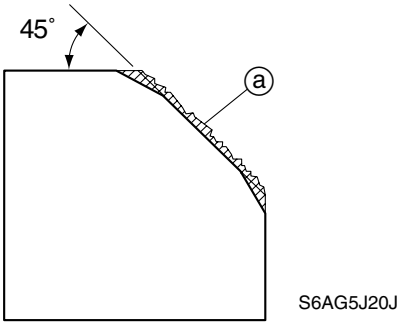

S6AG5J20J

ⓐ Slag or rough surface

CAUTION:

Do not over cut the valve seat. Be sure to turn the cutter evenly downward at a pressure of 40–50 N (4–5 kgf, 8.8–11 lbf) to prevent chatter marks.

3. Use a 30˚ cutter to adjust the contact width of the top edge of the valve seat.

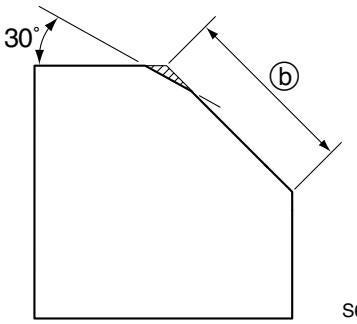

S6AG5J60J

ⓑ Previous contact width

4. Use a 60˚ cutter to adjust the contact width of the bottom edge of the valve seat.

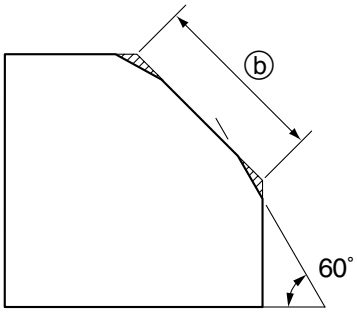

S6AG5J70J

ⓑ Previous contact width

5. Use a 45˚ cutter to adjust the contact width of the valve seat to specification.

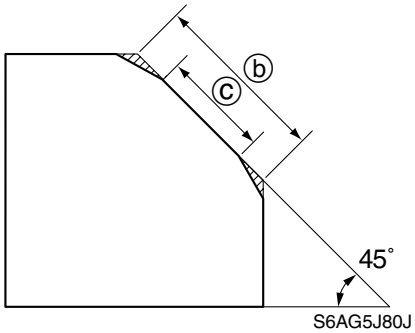

S6AG5J80J

ⓑ Previous contact width
ⓒ Specified contact width

6. Check the valve seat contact area of the valve.

NOTE:
To check the valve seat contact area, see "Checking the valve seat" (5-34).

7. If the valve seat contact area is too wide and situated in the center of the valve face, use a 30˚ cutter to cut the top edge of the valve seat and a 60˚ cutter to cut the bottom edge to center the area and set its width.

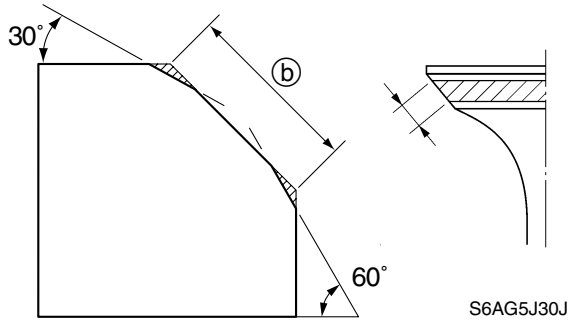

ⓑ Previous contact width

8. If the valve seat contact area is too narrow and situated near the top edge of the valve face, use a 30˚ cutter to cut the top edge of the valve seat, and then use a 45˚ cutter to center the area and set its width.

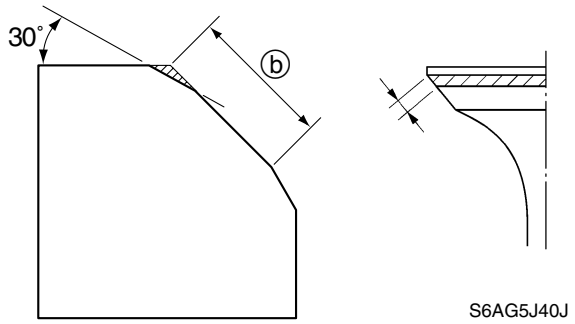

ⓑ Previous contact width

9. If the valve seat contact area is too narrow and situated near the bottom edge of the valve face, use a 60˚ cutter to cut the bottom edge of the valve seat, and then use a 45˚ cutter to center the area and set its width.

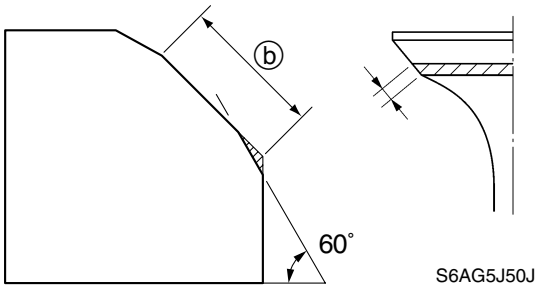

ⓑ Previous contact width

10. After refacing the valve seat to the specified contact width, apply a thin, even layer of lapping compound onto the valve seat, and then lap the valve using a valve lapper.

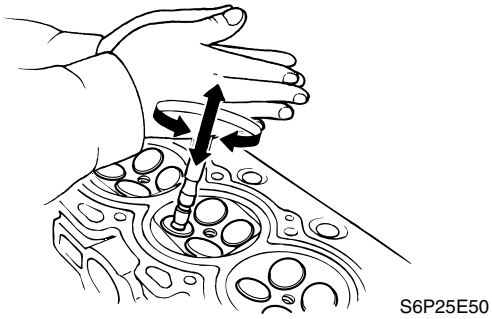

CAUTION:
Do not get the lapping compound on the valve stem and valve guide.

11. After every lapping procedure, be sure to clean off any remaining lapping compound from the cylinder head and the valves.

12. Check the valve seat contact area of the valve again.

NOTE:
To check the valve seat contact area, see "Checking the valve seat" (5-34).

Checking the cylinder head

1. Eliminate carbon deposits from the combustion chambers and check for deterioration.

2. Check the cylinder head warpage using a straightedge ① and thickness gauge ② in the directions shown. Replace the cylinder head assembly if above specification.

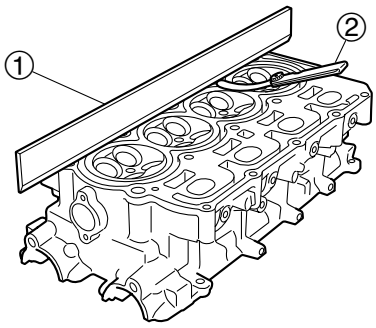

6BC50290

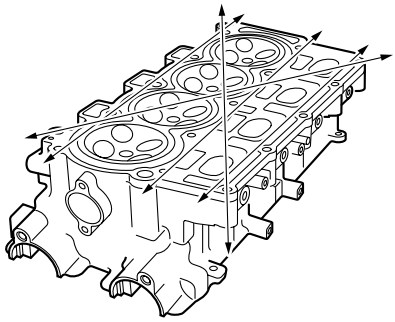

6BC50780

Cylinder head warpage limit:
0.10 mm (0.0039 in)

Installing the valve

1. Install a new valve seal ① onto the valve guide.

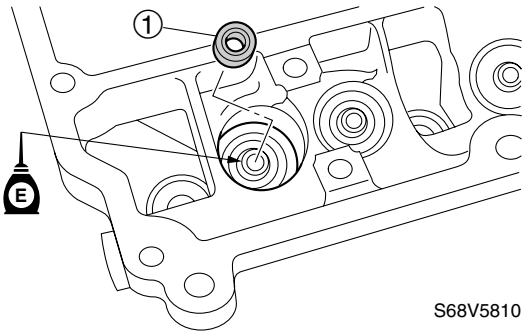

S68V5810

2. Install the valve ②, valve spring seat ③, valve spring ④ and valve spring retainer ⑤ as shown, and then attach the special service tools.

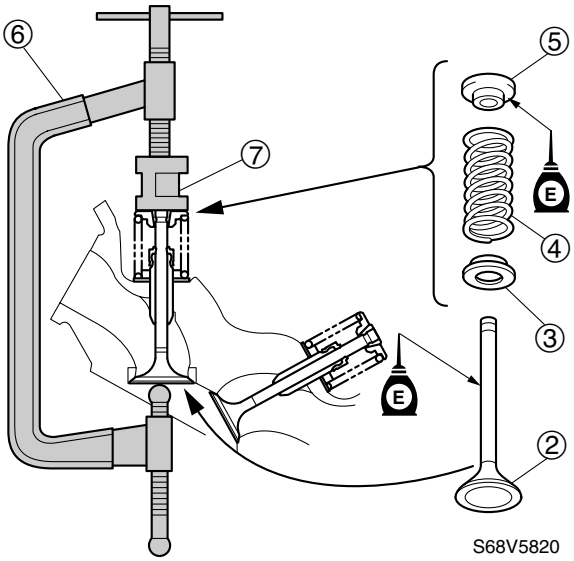

S68V5820

NOTE:
The valve spring can be installed in any direction.

Valve spring compressor ⑥:
90890-04019
Valve spring compressor attachment ⑦: 90890-06320

3. Compress the valve spring, and then install the valve cotters ⑧.

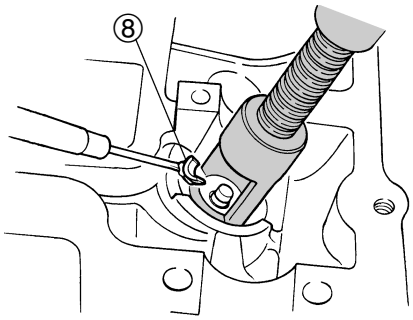

S68V5830

4. Lightly tap the valve spring retainer with a plastic hammer to set the valve cotters ⑧ securely.

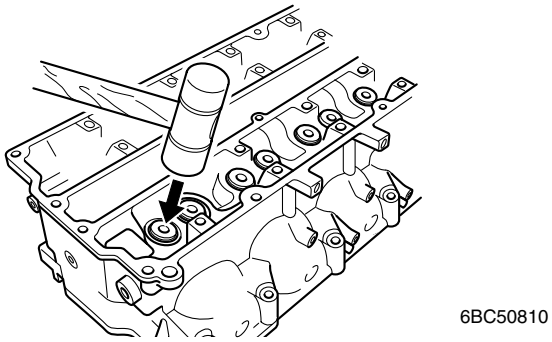

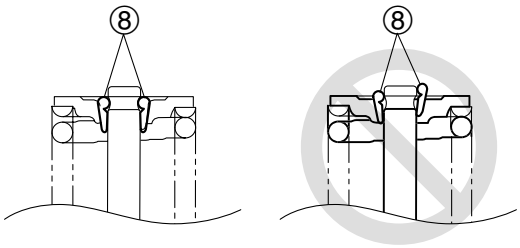

NOTE:

Be sure to install the camshafts after completing the procedure in “Installing the cylinder head”.

Installing the cylinder head

1. Clean the cylinder head mating surface, and then install the collars ① and new cylinder head gasket ② onto the cylinder block.

2. Install the cylinder head, and then tighten the cylinder head bolts ③ and ④ to the specified torques in the sequence shown.

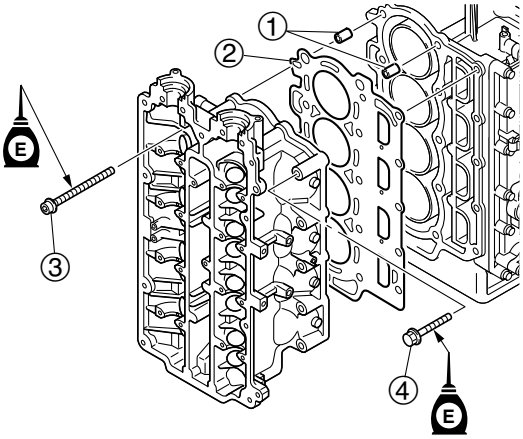

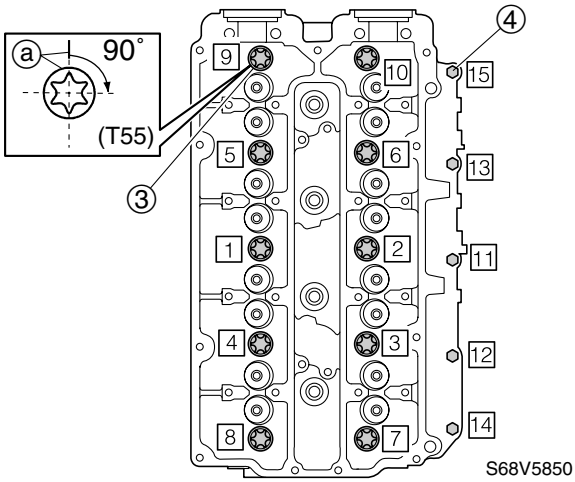

CAUTION:

Do not reuse the cylinder head gasket, always replace it with a new one.

NOTE:

- Apply engine oil to the cylinder head bolts ③ and ④ before installation.
- Tighten the bolts in the sequence shown.
- Tighten the M10 bolts ③ 1–10 to the specified torque in the 1st and 2nd stages, and then tighten the M8 bolts ④ 11–15 to the specified torque in the 3rd stage. In the 4th stage, make a mark ⓐ on the cylinder head and the M10 bolts ③ 1–10, and then tighten the bolts 90˚ from the mark ⓐ.
- After tightening the M10 bolts 1–10 has completed, tighten the M8 bolts ④ 11–15 to the specified torque in the 5th stage.

	Cylinder head bolt ③ 1–10 (M10): 1st: 15 N·m (1.5 kgf·m, 11.1 ft·lb) 2nd: 30 N·m (3.0 kgf·m, 22.1 ft·lb) Cylinder head bolt ④ 11–15 (M8): 3rd: 14 N·m (1.4 kgf·m, 10.3 ft·lb) Cylinder head bolt ③ 1–10 (M10): 4th: 90˚ Cylinder head bolt ④ 11–15 (M8): 5th: 28 N·m (2.8 kgf·m, 20.7 ft·lb)

5

3. Install the valve lifters with shims, camshafts, camshaft caps, cylinder head cover, driven sprockets, timing belt, timing belt tensioner and spring.

NOTE:

To install the camshafts, driven sprockets and timing belt, see “Installing the camshaft, sprocket and timing belt” (5-23).

Cylinder block

Cylinder block

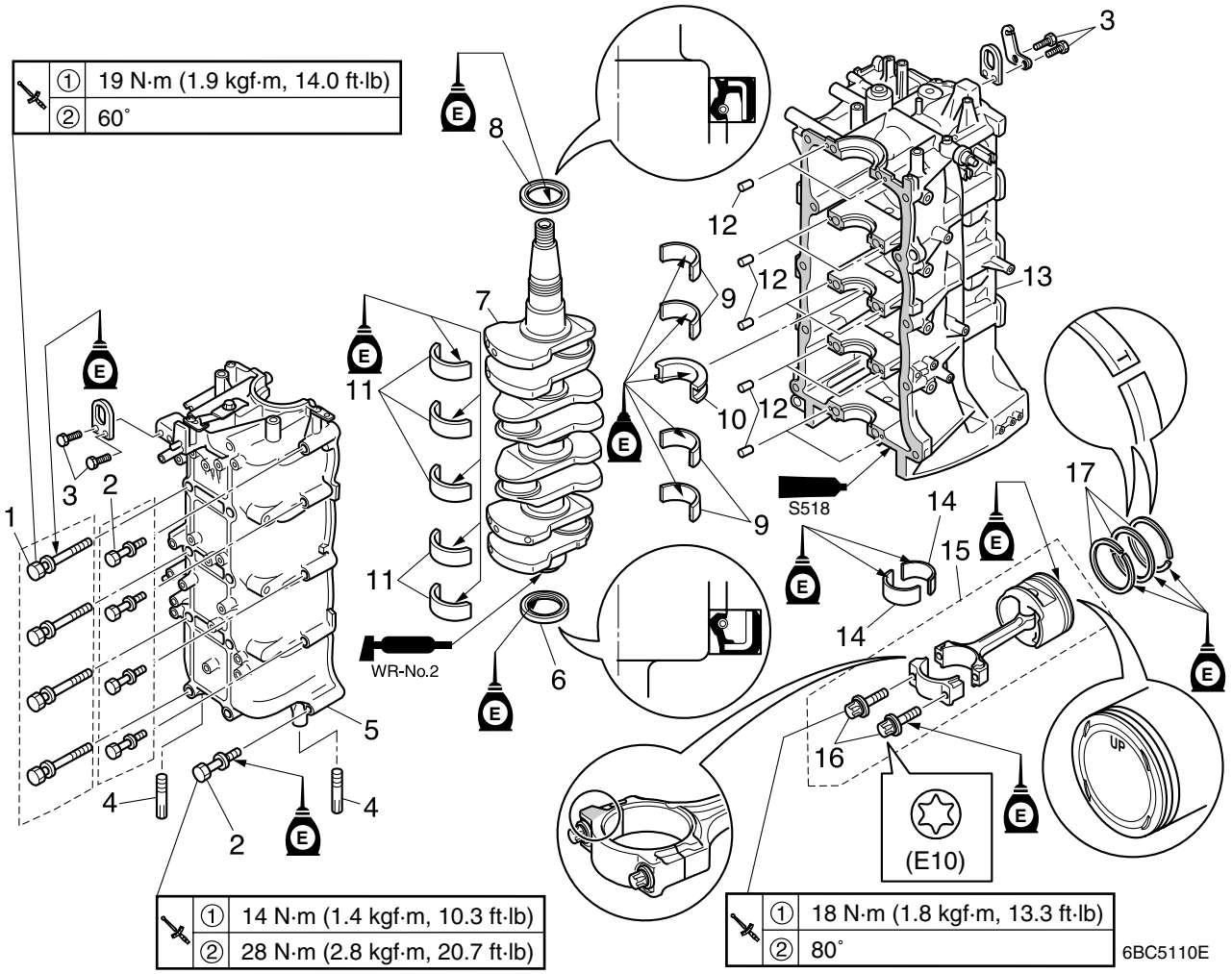

No.	Part name	Q'ty	Remarks
1	Bolt	10	M10 × 135 mm
2	Bolt	10	M8 × 55 mm
3	Bolt	4	M6 × 20 mm
4	Stud bolt	2	
5	Crankcase	1	
6	Oil seal	1	Not reusable
7	Crankshaft	1	
8	Oil seal	1	Not reusable
9	Main bearing	4	Upper
10	Main bearing	1	Upper:Unified thrust bearing (J3)
11	Main bearing	5	Lower
12	Dowel	10	
13	Cylinder block	1	
14	Connecting rod bearing	8	Upper/Lower
15	Piston/connecting rod assembly	4	
16	Bolt	8	Not reusable M8 × 38 mm/E10
17	Piston ring set	4	

Exhaust cover

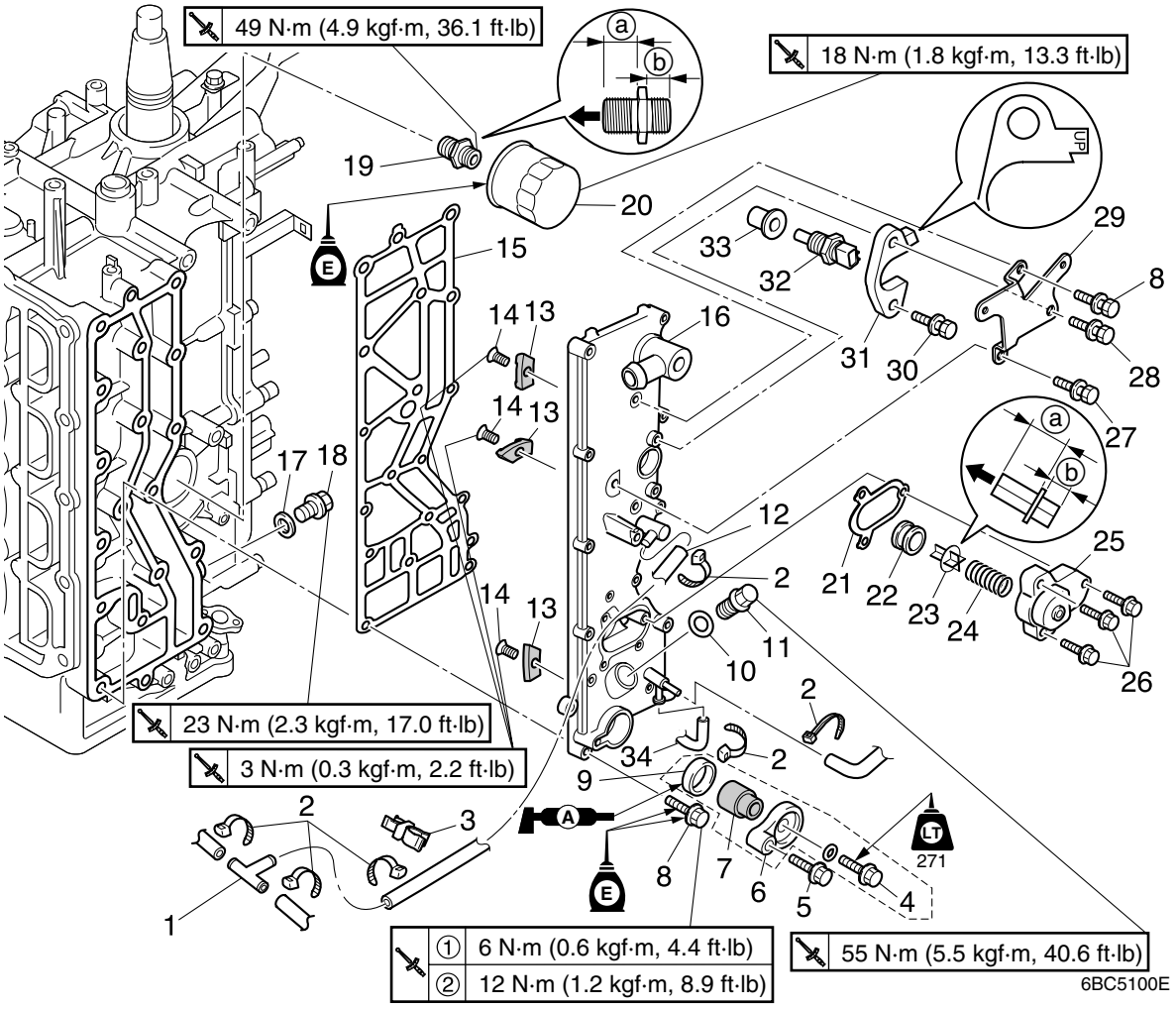

No.	Part name	Q'ty	Remarks
1	Joint	1	
2	Plastic tie	6	Not reusable
3	Holder	1	
4	Bolt	1	M6 × 20 mm
5	Bolt	1	M8 × 40 mm
6	Anode Cover	1	
7	Anode	1	
8	Bolt	18	M6 × 30 mm
9	Grommet	1	
10	Gasket	1	Not reusable
11	Plug	1	M18 × 17 mm
12	Hose	1	Length: 390 mm
13	Anode	3	
14	Screw	3	ø4 × 16 mm
15	Gasket	1	Not reusable
16	Exhaust cover	1	
17	Gasket	1	Not reusable

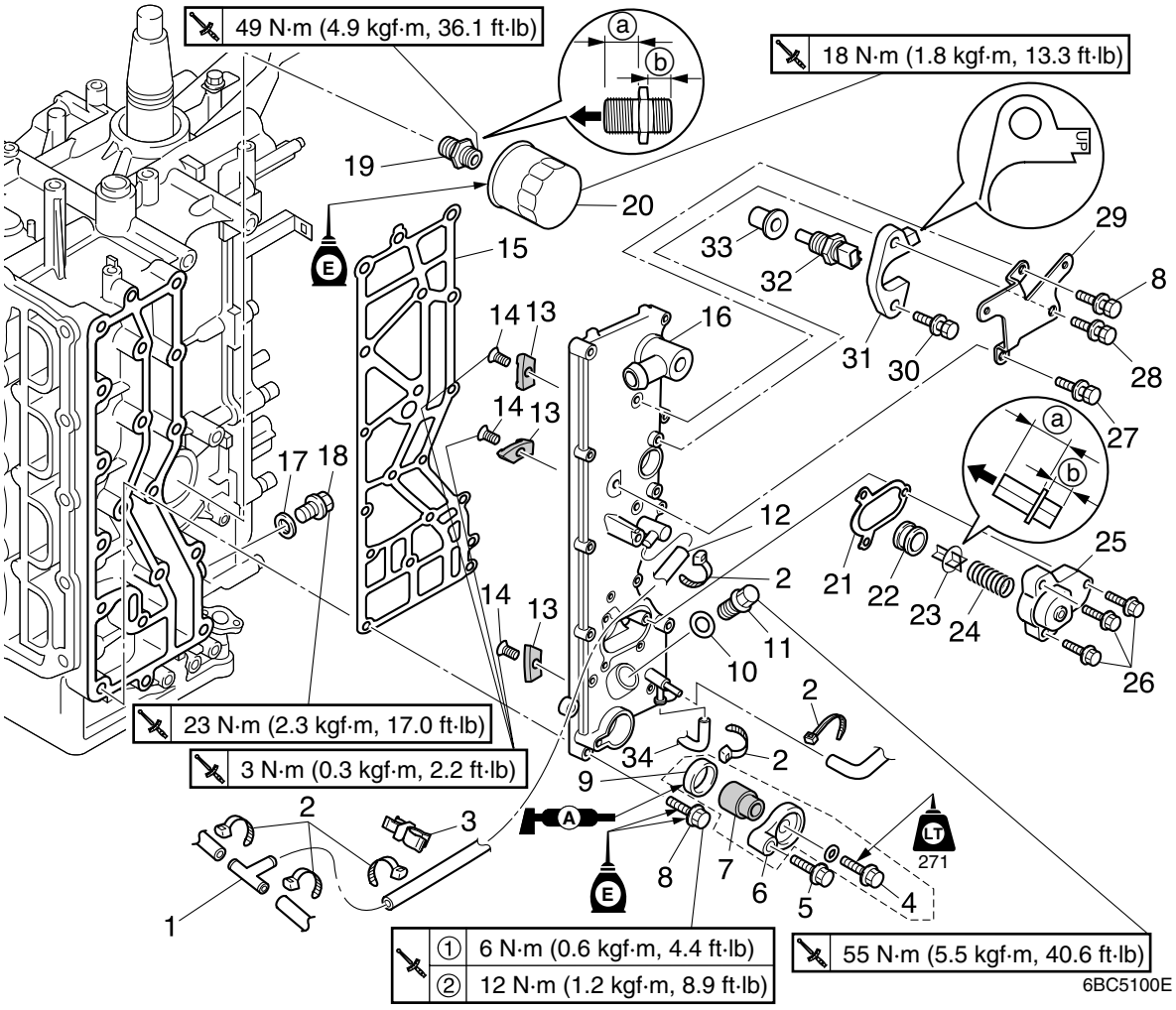

No.	Part name	Q'ty	Remarks
18	Plug	1	M14 × 12 mm
19	Joint	1	ⓐ > ⓑ
20	Oil filter	1	
21	Gasket	1	Not reusable
22	Grommet	1	
23	PCV	1	ⓐ > ⓑ
24	Spring	1	
25	Cover	1	
26	Bolt	3	M6 × 20 mm
27	Bolt	1	M6 × 12 mm
28	Bolt	1	M6 × 20 mm
29	Bracket	1	
30	Bolt	1	M6 × 16 mm
31	Holder	1	
32	Cooling water temperature sensor	1	
33	Gasket	1	Not reusable
34	Hose	1	Length: 700mm

Removing the exhaust cover

1. Remove the exhaust cover bolts ① in the sequence shown.

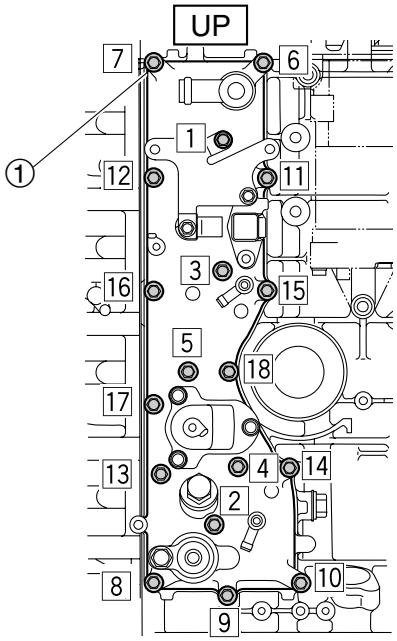

6BC50305

2. Remove the exhaust cover.

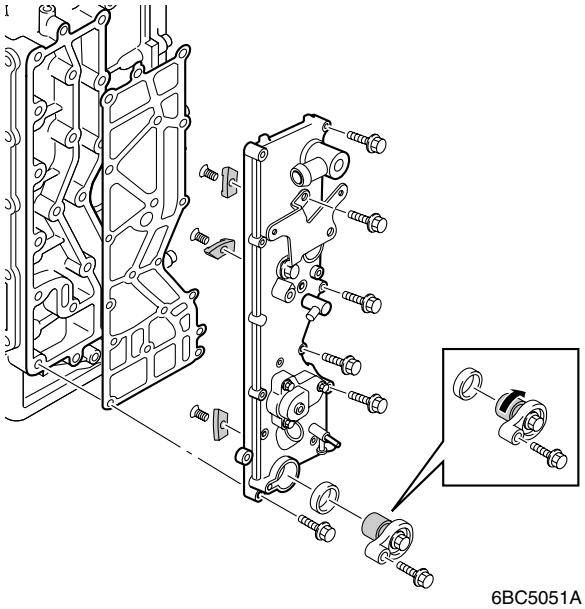
6BC5051A

Checking the exhaust cover

1. Check the exhaust cover. Replace if cracked or corroded.
2. Check the anodes. Clean if there are scales, grease or oil appeared or replace if excessively eroded.

Checking the PCV

1. Check the PCV, grommet and spring. Clean if clogged or replace if deformed.

Disassembling the cylinder block

1. Loosen the drive sprocket nut ①.

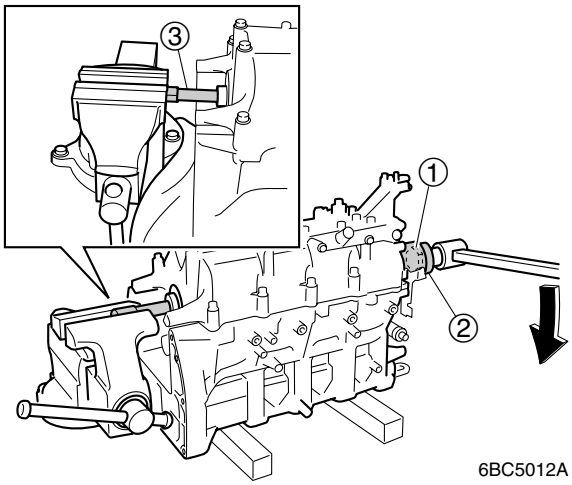

6BC5012A

NOTE:

- Use a deep 46 mm socket ② to loosen the drive sprocket nut ①.
- Use the air tools to loosen the drive sprocket nut easily.

	Crankshaft holder 20 ③: 90890-06552

2. Remove the drive sprocket nut ①, drive sprocket ④, retaining plate ⑤ and Woodruff key ⑥.

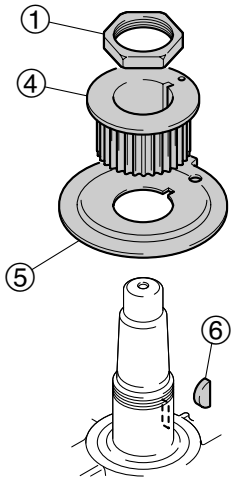

S68V5880

3. Remove the crankcase bolts ⑦ and ⑧ in the sequence shown, and then remove the crankcase.

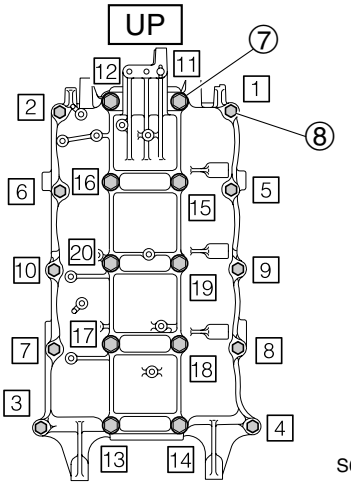

S68V5950

NOTE:
Do not remove the ignition timing pointer from the crankcase.

4. Remove the connecting rod cap bolts ⑨ and the connecting rod cap ⑩, and then remove the piston/connecting rod assembly ⑪.

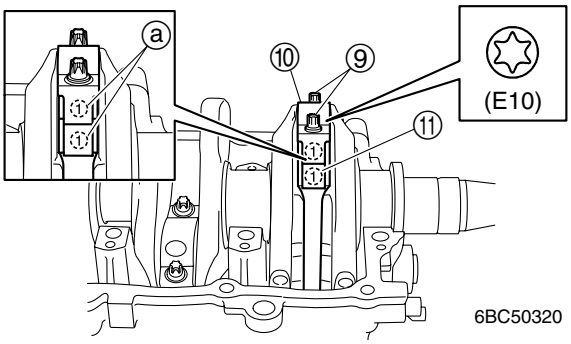

6BC50320

NOTE:
- Mark each connecting rod and connecting rod cap with an identification number ⓐ of the corresponding cylinder.
- Do not mix the connecting rods and connecting rod caps. Keep them organized in each group.
- Be sure to keep the connecting rod bearings in the order as they were removed.
- The piston and connecting rod cannot be disassembled.

5. Remove the crankshaft, oil seals and main bearings from the crankcase or cylinder block.

NOTE:
Be sure to keep the bearings in the order as they were removed.

5

Checking the cylinder block

CAUTION:

Do not scratch the mating surfaces of the cylinder block and crankcase.

1. Clean the cylinder sleeves, cooling water passages and exhaust passages, and then check them. Replace the cylinder block or crankcase if cracked or damaged.

Checking the piston diameter

1. Measure the piston outside diameter ⓐ at the specified measuring point ⓑ. Replace the piston/connecting rod assembly if out of specification.

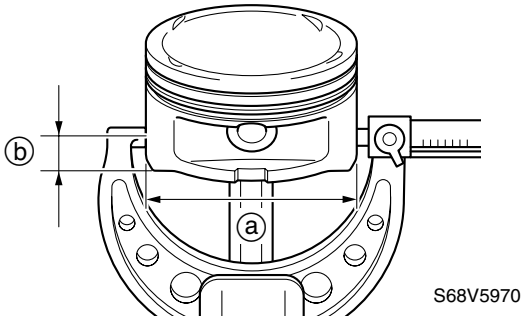

Piston diameter ⓐ:
78.928–78.949 mm
(3.1074–3.1082 in)
Measuring point ⓑ:
13.0 mm (0.51 in) up from the bottom of the piston skirt
Oversize piston diameter ⓐ:
79.25 mm (3.1201 in)

Checking the cylinder bore

1. Measure the cylinder bore (D_1–D_6) at measuring points ⓐ, ⓑ and ⓒ, and in direction ⓓ (D_1, D_3, D_5), which is parallel to the crankshaft, and in direction ⓔ (D_2, D_4, D_6), which is at a right angle to the crankshaft.

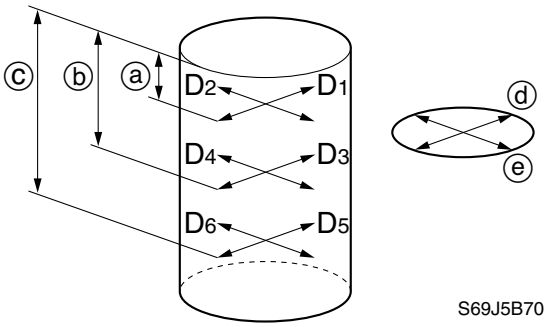

ⓐ 20 mm (0.8 in)
ⓑ 50 mm (2.0 in)
ⓒ 80 mm (3.1 in)

Cylinder bore (D_1–D_6):
79.000–79.020 mm
(3.1102–3.1110 in)

Checking the piston clearance

1. Check the clearances by referring to the specified values if replacing the piston/connecting rod assembly, piston ring set, cylinder block or all parts.

Piston clearance (reference data):
0.070–0.080 mm
(0.0028–0.0032 in)

Checking the piston ring

1. Measure the piston ring dimensions B and T. Replace the piston ring set if out of specification.

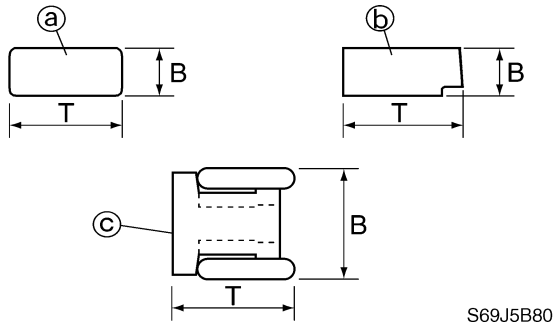

Piston ring dimensions:
- Top ring ⓐ:
  - B: 1.17–1.19 mm (0.0461–0.0469 in)
  - T: 2.80–3.00 mm (0.1102–0.1181 in)
- 2nd piston ring ⓑ:
  - B: 1.47–1.49 mm (0.0579–0.0587 in)
  - T: 3.00–3.20 mm (0.1181–0.1260 in)
- Oil ring ⓒ:
  - B: 2.38–2.48 mm (0.0937–0.0976 in)
  - T (reference data): 2.40 mm (0.0945 in)

Checking the piston ring end gap

1. Level the piston ring ① in the cylinder with a piston crown.

2. Measure the piston ring end gap ⓐ at the specified measuring point ⓑ.

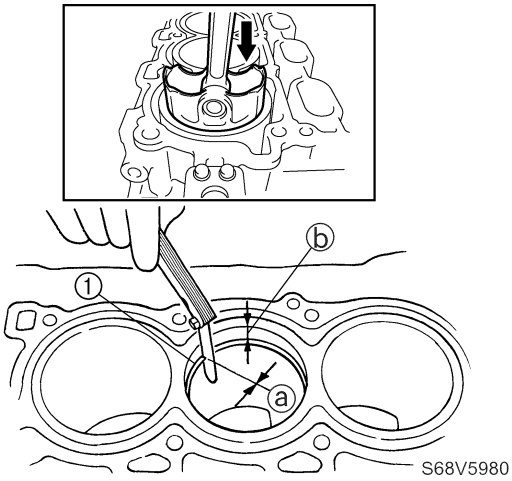

Piston ring end gap ⓐ (reference data):
- Top ring: 0.15–0.35 mm (0.0059–0.0138 in)
- 2nd piston ring: 0.70–0.90 mm (0.0276–0.0354 in)
- Oil ring: 0.20–0.70 mm (0.0079–0.0276 in)

Measuring point ⓑ: 20 mm (0.8 in)

5

Checking the piston ring groove

1. Measure the piston ring grooves. Replace the piston/connecting rod assembly if out of specification.

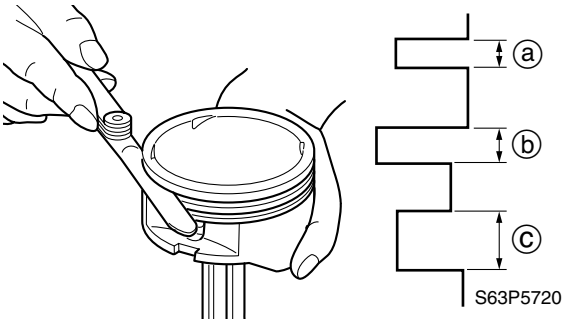

Piston ring groove:
Top ring ⓐ:
1.23–1.25 mm (0.048–0.049 in)
2nd piston ring ⓑ:
1.52–1.54 mm (0.060–0.061 in)
Oil ring ⓒ:
2.51–2.53 mm (0.099–0.100 in)

Checking the piston ring side clearance

1. Measure the piston ring side clearance. Replace the piston/connecting rod assembly and piston rings as a set if out of specification.

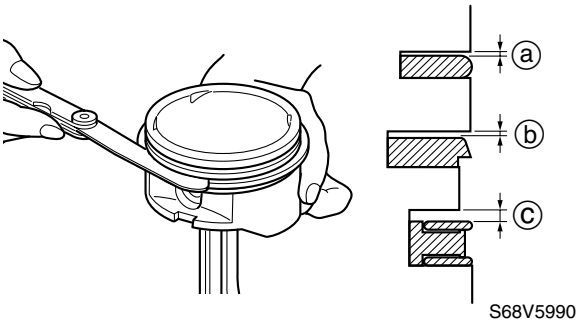

Piston ring side clearance:
Top ring ⓐ:
0.04–0.08 mm
(0.0016–0.0032 in)
2nd piston ring ⓑ:
0.03–0.07 mm
(0.0012–0.0028 in)
Oil ring ⓒ:
0.03–0.15 mm
(0.0012–0.0059 in)

Checking the connecting rod big end side clearance

1. Measure the connecting rod big end side clearance ⓐ.

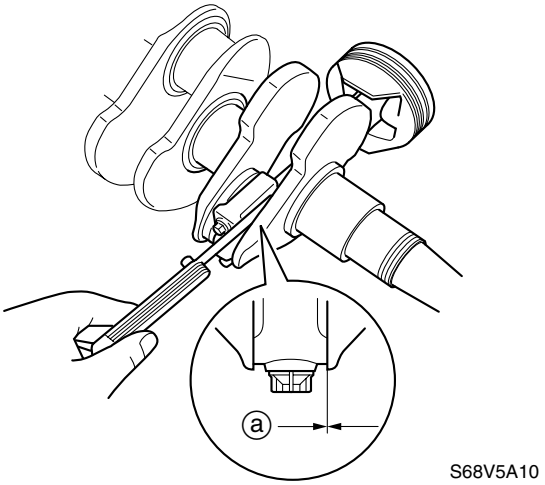

Connecting rod big end side clearance ⓐ (reference data):
0.14–0.28 mm (0.0055–0.0110 in)

Checking the crankshaft

1. Measure the crankshaft journal diameter ⓐ, crankpin diameter ⓑ and crankpin width ⓒ. Replace the crankshaft if out of specification.

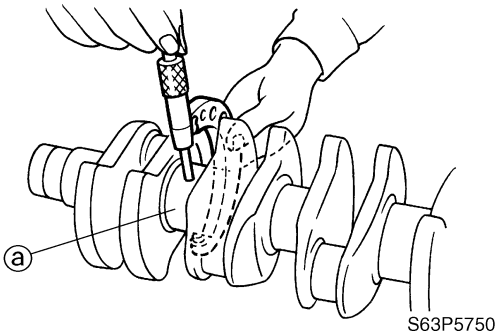

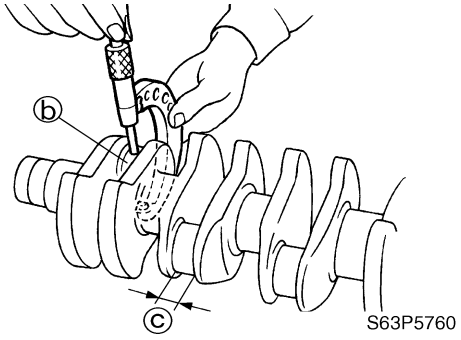

Crankshaft journal diameter ⓐ:
47.984–48.000 mm
(1.8891–1.8898 in)
Crankpin diameter ⓑ:
43.982–44.000 mm
(1.7316–1.7323 in)
Crankpin width ⓒ:
21.00–21.07 mm
(0.8268–0.8295 in)

2. Measure the crankshaft runout. Replace if above specification.

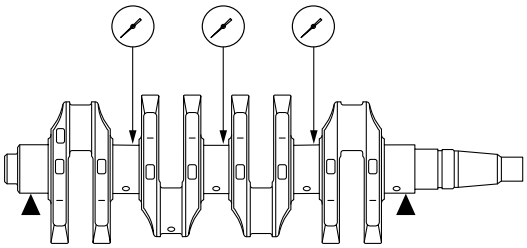

S68V5A20

Crankshaft runout limit:
0.03 mm (0.0012 in)

Checking the crankpin oil clearance

1. Clean the bearings, connecting rod and crankpin.

2. Install the upper bearing into the connecting rod ① and the lower bearing into the connecting rod cap ②.

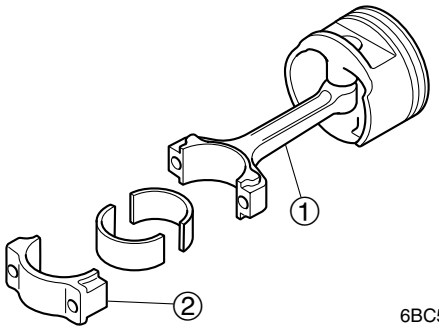

6BC50330

NOTE:
Install the connecting rod bearings in their original positions.

3. Install the piston/connecting rod assembly, and then install the crankshaft onto the cylinder block.

4. Put a piece of Plastigauge (PG-1) onto the crankpin, parallel to the crankshaft.

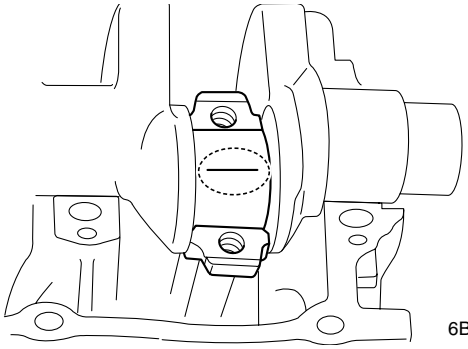

6BC50340

NOTE:
Be sure not to put the Plastigauge (PG-1) over the oil hole in the crankpin of the crankshaft.

5

5. Install the connecting rod cap onto the crankpin ③.

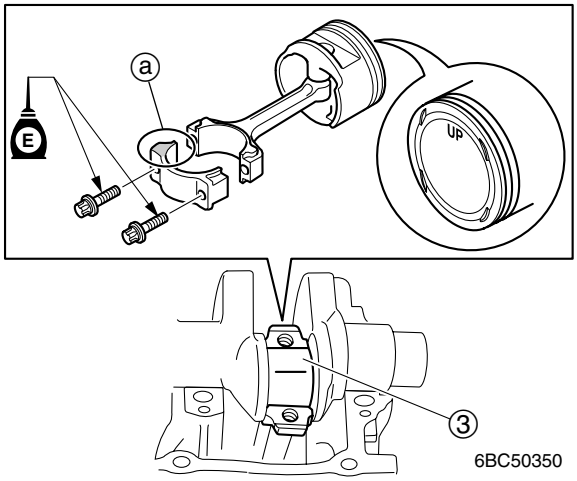

NOTE:
Make sure that the large, flat side ⓐ on the connecting rod cap face toward the flywheel magnet end of the crankshaft.

6. Tighten the connecting rod cap bolts ④ to the specified torque in 2 stages.

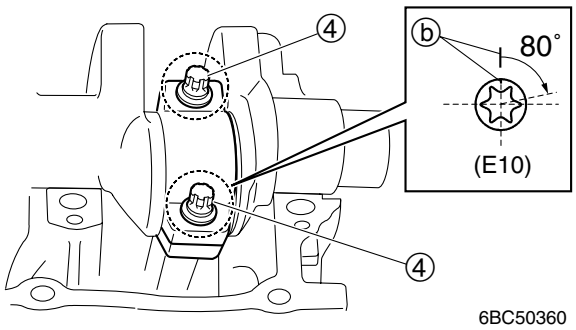

NOTE:
- Reuse the removed connecting rod cap bolts when checking the oil clearance.
- Do not turn the connecting rod until the crankpin oil clearance measurement has been completed.
- In the 2nd stage, make a mark ⓑ on the connecting rod cap bolts and connecting rod caps, and then tighten the bolts 80˚ from the mark.

Connecting rod cap bolt ④:
1st: 18 N·m (1.8 kgf·m, 13.3 ft·lb)
2nd: 80˚

7. Gently remove the connecting rod cap, and then measure the width of the compressed Plastigauge (PG-1) on crankpin. Replace the connecting rod bearing if out of specification.

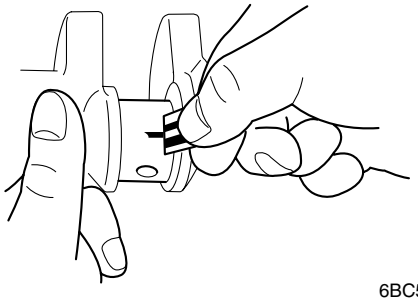

Crankpin oil clearance:
0.024–0.044 mm
(0.0009–0.0017 in)

Selecting the connecting rod bearing

NOTE:
Use a metric gauge in this procedure.

1. When replacing the connecting rod bearing, select the suitable bearing as follows.

2. Install the connecting rod cap ① to the connecting rod, and then tighten the connecting rod cap bolts ② to the specified torque in 2 stages.

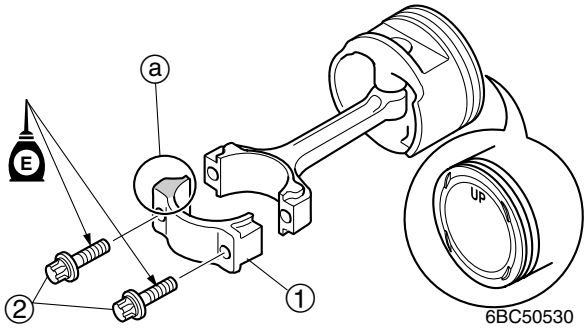

NOTE:
- Make sure that the large, flat side ⓐ on the connecting rod cap faces toward the "UP" mark of the piston.
- Reuse the removed connecting rod cap bolts when selecting the connecting rod bearing.

Connecting rod cap bolt ②:
1st: 18 N·m (1.8 kgf·m, 13.3 ft·lb)
2nd: 80˚

3. Measure the connecting rod big end inside diameter ⓑ.

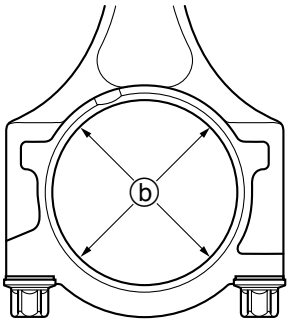

6BC50390

Connecting rod big end inside diameter ⓑ:
47.025–47.045 mm
(1.8514–1.8522 in)

4. Check the stamped value ⓒ (P1–P4) on the crankshaft ③. Calculate the outside diameter ⓓ of crankpin by applying this value ⓒ to last 2 digits of specified value.

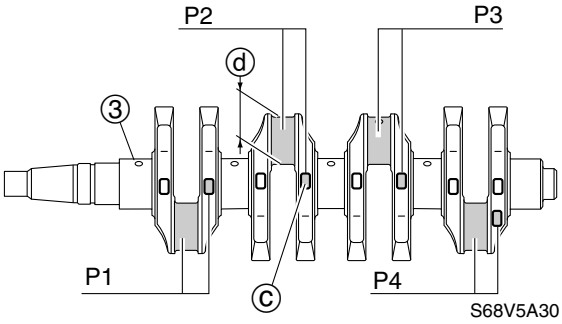

Example:
43.900 (specified value)
82 (stamped value ⓒ)
Outside diameter ⓓ = 43.982

NOTE:
If the stamped value ⓒ is "00", then the outside diameter ⓓ is "44.000".

5. Calculate the bearing selective value ⓔ by applying the following formula using the inside diameter ⓑ in step 3 and outside diameter ⓓ in step 4.

Example:
Inside diameter ⓑ – outside diameter ⓓ = Bearing selective value ⓔ
47.025 mm – 43.982 mm = 3.043 mm

Suitable colors:
Upper bearing → green
Lower bearing → blue

5

6. Select the suitable color ⓕ for the connecting rod bearing from the table below according to the calculated values.

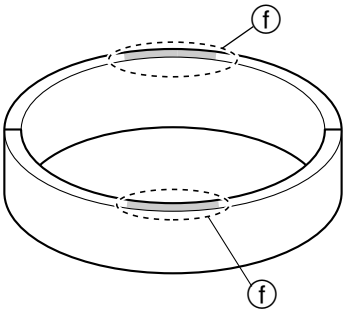

S68V5A90

Connecting rod bearing selection table (20 ˚C [68 ˚F])		
Bearing selective value ⓔ	Upper bearing	Lower bearing
3.025–3.027	Yellow	Yellow
3.028–3.034	Yellow (*)	Green (*)
3.035–3.041	Green	Green
3.042–3.049	Green (*)	Blue (*)
3.050–3.057	Blue	Blue
3.058–3.063	Blue (*)	Red (*)

NOTE:
- The (*) mark in the table indicates that the colors of the upper and lower bearings are different.
- Be sure to install the upper bearing for connecting rod side and lower bearing for connecting rod cap side.
- If the bearing selective value ⓔ is above the maximum value (3.063 mm), check the crankshaft.

Checking the crankshaft journal oil clearance

1. Clean the bearings, crankshaft journals, the bearing portions of the crankcase and cylinder block.
2. Install the upper bearings ①, unified thrust bearing (J3) ② and the crankshaft into the cylinder block ③.

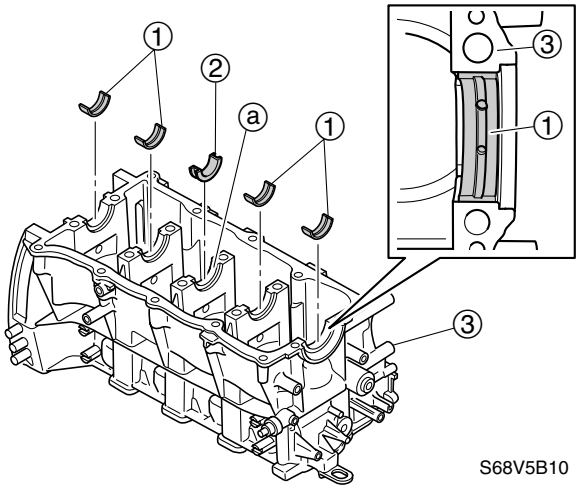

S68V5B10

NOTE:
- Install the bearings in their original positions.
- Install the unified thrust bearing (J3) ② at the position ⓐ shown.

3. Put a piece of Plastigauge (PG-1) onto the each crankshaft journal, parallel to the crankshaft.

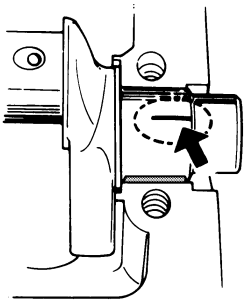
S60C5920

NOTE:
Be sure not to put the Plastigauge (PG-1) over the oil hole in the main journal of the crankshaft.

4. Install the lower bearings into the crankcase.

NOTE:
Install the bearings in their original positions.

5. Install the crankcase onto the cylinder block, and then tighten the crankcase bolts ④ and ⑤ to the specified torque in 2 stages and in the sequence shown.

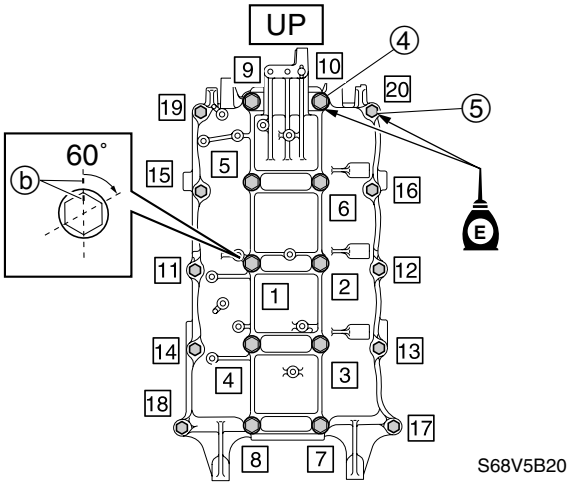

NOTE:
- Apply engine oil to the crankcase bolts before installation.
- Do not turn the crankshaft until the crankshaft journal oil clearance measurement has been completed.
- Tighten the M10 bolts ④ 1–10 and M8 bolts ⑤ 11–20 to the specified torque in the 1st stage, and then tighten the M10 bolts ④ and M8 bolts ⑤ in the 2nd stage. In the 2nd stage, make a mark ⓑ on the crankcase and the M10 bolts ④ 1–10, and then tighten the bolts 60˚ from the mark.

Crankcase bolt ④ 1–10 (M10):
1st: 19 N·m (1.9 kgf·m, 14.0 ft·lb)
2nd: 60˚
Crankcase bolt ⑤ 11–20 (M8):
1st: 14 N·m (1.4 kgf·m, 10.3 ft·lb)
2nd: 28 N·m (2.8 kgf·m, 20.7 ft·lb)

6. Gently remove the crankcase, and then measure the width of the compressed Plastigauge (PG-1) on each crankshaft journal. Replace the main bearing if out of specification.

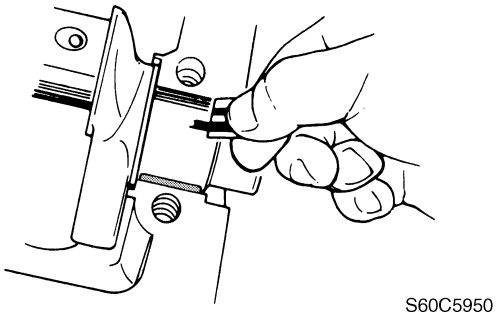

NOTE:
When loosening the crankcase bolts, loosen them in the opposite order used for tightening.

Crankshaft journal oil clearance:
0.024–0.044 mm
(0.0009–0.0017 in)

Selecting the main bearing

1. When replacing the main bearing, select the suitable bearing as follows.

5

2. Check the stamped value ⓐ, ⓑ (J1–J5) on the crank shaft ① and cylinder block ②. Calculate the outside diameter ⓒ or inside diameter ⓓ of crankshaft journal by applying these value ⓐ or ⓑ to last 2 digits of specified value.

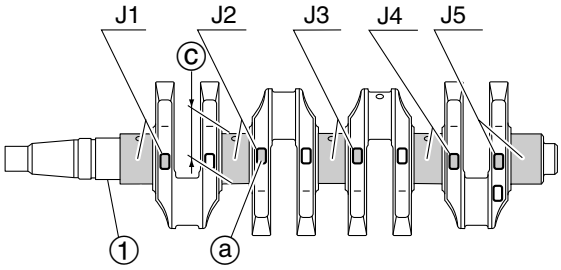

S68V5B30

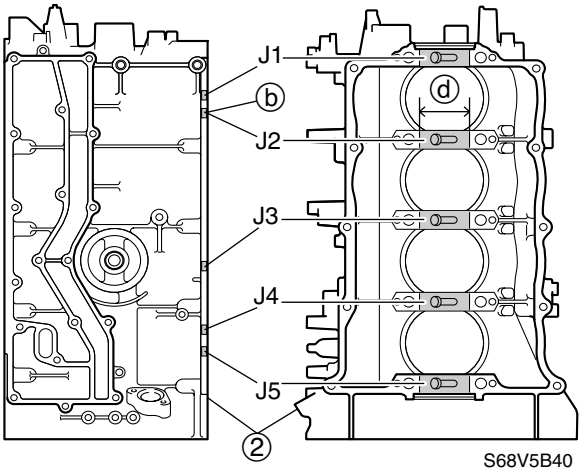

S68V5B40

Example:
<Outside diameter>
47.900 (Specified value)
89 (Stamped value ⓐ)
Outside diameter ⓒ = 47.989
<Inside diameter>
54.000 (Specified value)
32 (Stamped value ⓑ)
Inside diameter ⓓ = 54.032

NOTE:
- If the stamped value ⓐ is “00”, then the outside diameter ⓒ is “48.000”.
- If the stamped value ⓑ is “00”, then the inside diameter ⓓ is “55.000”.

3. Calculate the bearing selective value ⓔ by applying the following formula using the outside diameter ⓒ and inside diameter ⓓ in step 2.

Example:
Inside diameter ⓓ – outside diameter ⓒ = Bearing selective value ⓔ
54.032 mm – 47.989 mm = 6.043 mm

Suitable colors:
Upper bearing/unified thrust bearing (J3) → red
Lower bearing → blue

4. Select the suitable color ⓕ for the main bearing from the table below according to the calculated values.

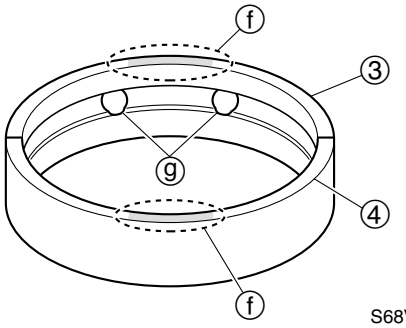

S68V5D80

Main bearing selection table (20 ˚C [68 ˚F])		
Bearing selective value ⓔ	Upper bearing ③/ unified thrust bearing (J3)	Lower bearing ④
6.023–6.026	Green (*)	Yellow (*)
6.027–6.034	Blue (*)	Green (*)
6.035–6.042	Blue	Blue
6.043–6.049	Red (*)	Blue (*)
6.050–6.058	Red	Red

NOTE:
- The (*) mark in the table indicates that the colors of the upper and lower bearings are different.
- Be sure to install the upper bearing ③ for cylinder block side and lower bearing ④ for crankcase side.
- There are oil holes ⓖ in the upper bearing ③.
- Upper bearing (J3) is a unified thrust bearing (J3).
- If the bearing selective value ⓔ is above the maximum value (6.058 mm), check the crankshaft.

Assembling the cylinder block

1. Install the oil rings ①, 2nd piston ring ② and top ring ③ to the piston.

NOTE:
To install the 2nd piston ring and top ring , the "T" marks ⓐ facing upward.

2. Offset the piston ring end gaps as shown.

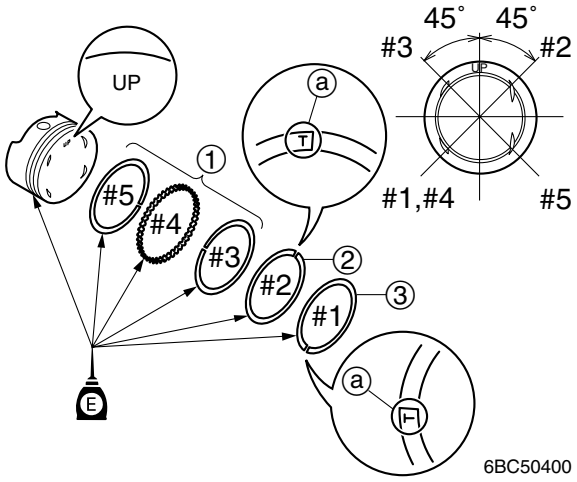

CAUTION:
Do not scratch the pistons or break the piston rings.

NOTE:
After installing the piston rings, check that they move smoothly.

3. Install the upper bearing into the connecting rod ④ and the lower bearing into the connecting rod cap ⑤.

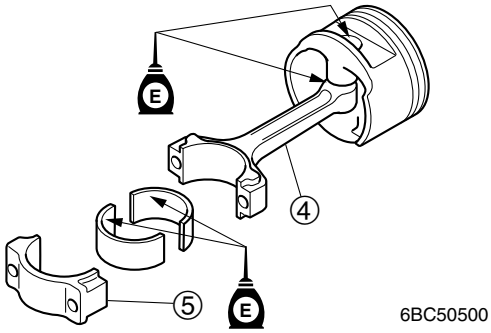

NOTE:
Install the connecting rod bearings in their original positions.

4. Install the piston with the "UP" mark on the piston crown facing towards the flywheel magnet.

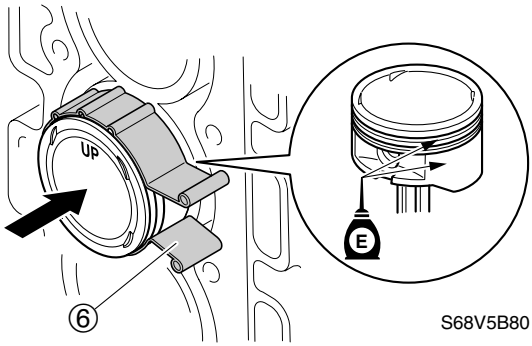

NOTE:
Apply engine oil to the side of the piston, piston rings and cylinder wall before installation.

	Piston slider ⑥: 90890-06530

5

5. Install the upper bearing ⑦ and unified thrust bearing (J3) ⑧ into the cylinder block.

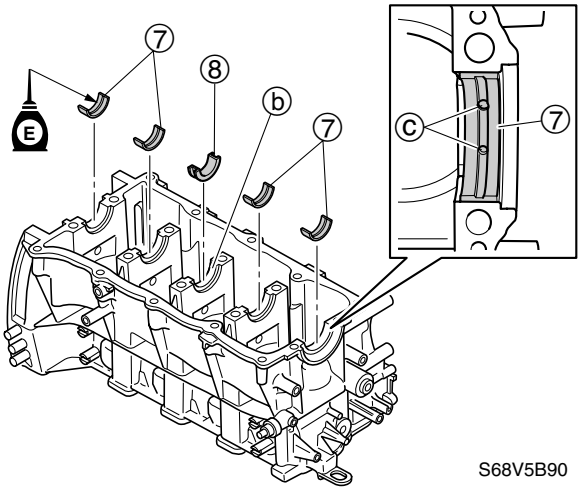

CAUTION:

Be sure to align the oil holes ⓒ in the upper bearings ⑦, ⑧ with the oil holes in the cylinder block, when installing them. Otherwise, the crankshaft seizure could occur.

NOTE:

- Install the bearings in their original positions.
- Install the unified thrust bearing (J3) at the position ⓑ shown.

6. Install new oil seals ⑨ and ⑩ to the crankshaft ⑪, and then install the crankshaft ⑪ into the cylinder block.

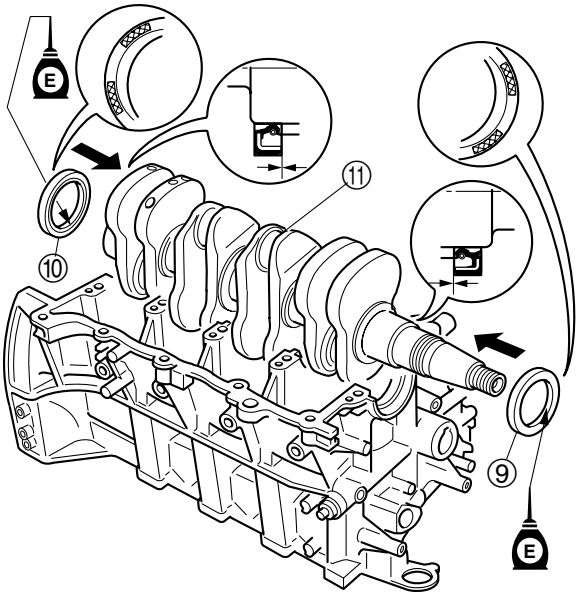

6BC50410

NOTE:

- Apply engine oil to the lips of the oil seals ⑨ and ⑩ before installation.
- Be sure to install the oil seals into the cylinder block so that the oil seals are securely seated at the stepped area.

7. Install the connecting rod cap ⑤ to the connecting rod, and then tighten new connecting rod cap bolts ⑫ to the specified torque in 2 stages.

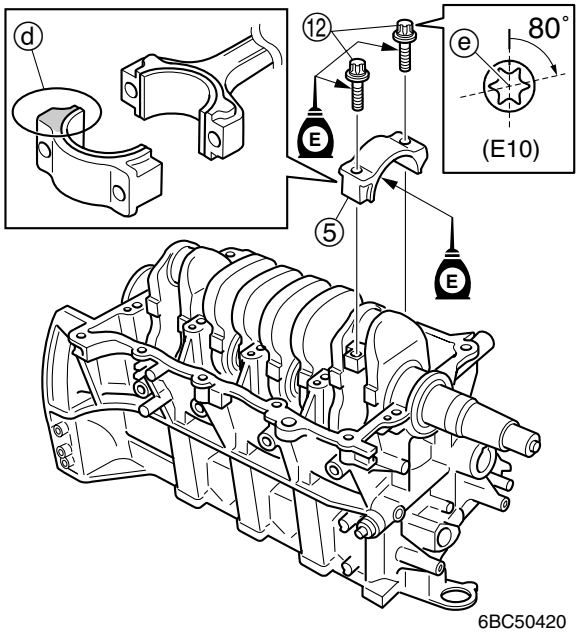

CAUTION:

Do not reuse the connecting rod cap bolts, always replace them with new ones.

NOTE:
- Make sure that the large, flat side ⓓ on the connecting rod cap faces towards the flywheel magnet side of the crankshaft.
- Apply engine oil to the connecting rod caps and connecting rod cap bolts before installation.
- In the 2nd stage, make a mark ⓔ on the connecting rod cap bolts and connecting rod caps, and then tighten the bolts 80˚ from the mark.
- After tightening the connecting rod cap bolts, check that the crankshaft rotates smoothly.

	Connecting rod cap bolt ⑫: 1st: 18 N·m (1.8 kgf·m, 13.3 ft·lb) 2nd: 80˚

8. Install the lower bearings ⑬ into the crankcase.

NOTE:
- Install the bearings in their original positions.
- Install the lower bearing ⑬ at the center of the crankcase journal.

9. Apply sealant to the mating surface of the crankcase.

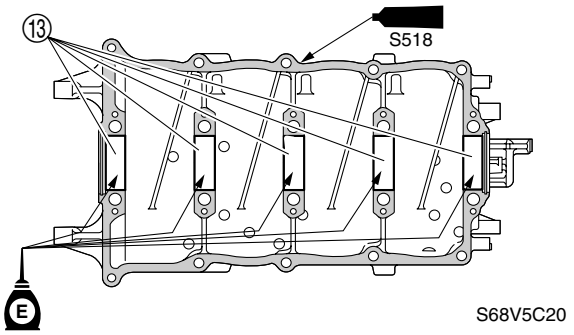

NOTE:
Do not get any sealant on the bearings.

5

10. Install the crankcase onto the cylinder block, and then tighten the crankcase bolts ⑭ and ⑮ to the specified torque in 2 stages and in the sequence shown.

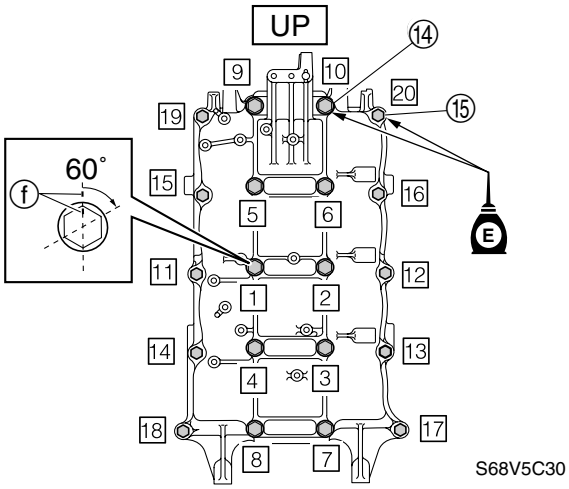

NOTE:
- Apply engine oil to the crankcase bolts before installation.
- Tighten the M10 bolts ⑭ 1–10 and M8 bolts ⑮ 11–20 to the specified torque in the 1st stage, and then tighten the M10 bolts ⑭ and M8 bolts ⑮ in the 2nd stage. In the 2nd stage, make a mark ⓕ on the crankcase and the M10 bolts ⑭ 1–10, and then tighten the bolts 60˚ from the mark.
- After tightening the crankcase bolts, check that the crankshaft rotates smoothly.

Crankcase bolt ⑭ 1–10 (M10):
1st: 19 N·m (1.9 kgf·m, 14.0 ft·lb)
2nd: 60˚
Crankcase bolt ⑮ 11–20 (M8):
1st: 14 N·m (1.4 kgf·m, 10.3 ft·lb)
2nd: 28 N·m (2.8 kgf·m, 20.7 ft·lb)

11. Check that the keyway ⓖ in the crankshaft and the mating surface ⓗ of the crankcase and cylinder block are aligned.

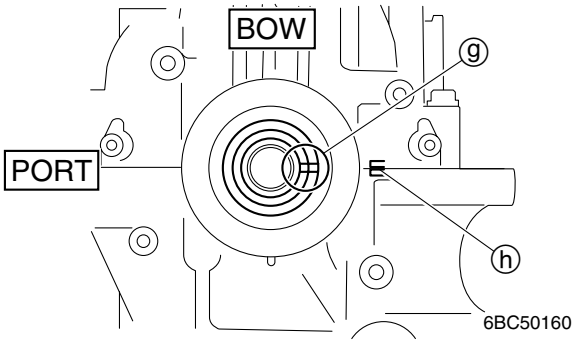

12. Install the Woodruff key ⑯, retaining plate ⑰ and drive sprocket ⑱, and then install the drive sprocket nut ⑲.

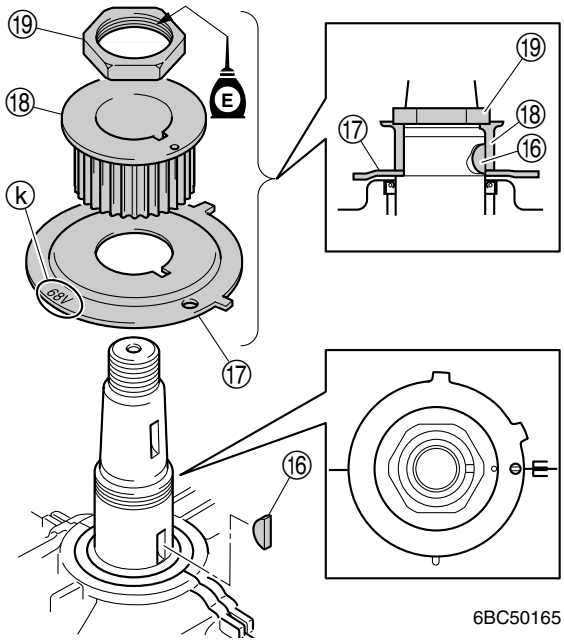

NOTE:
- Apply engine oil to the thread of the drive sprocket nut ⑲ before installation.
- Face the model cord mark ⓚ on the retaining plate toward the flywheel magnet side.

13. Tighten the drive sprocket nut ⑲ to the specified torque.

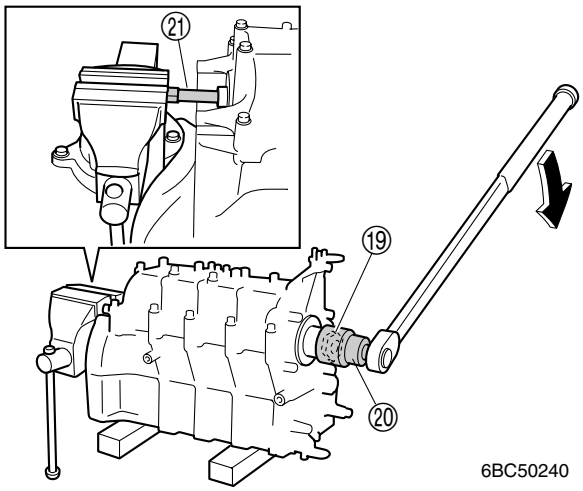

NOTE:
Use a deep 46mm socket ⑳ to tighten the drive sprocket nut.

	Crankshaft holder 20 ㉑: 90890-06552

	Drive sprocket nut ⑲: 265 N·m (26.5 kgf·m, 195.5 ft·lb)

14. Check that the hole ⓜ in the retaining plate with the mating surface ⓗ of the crankcase and cylinder block are aligned.

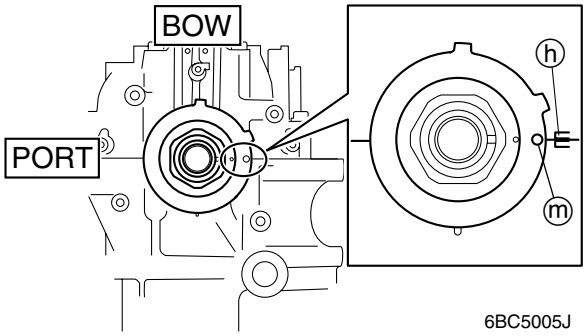

15. Install the cylinder head, camshafts, cylinder head cover, driven sprockets, timing belt, base assembly and flywheel magnet.

NOTE:
- To install the cylinder head, see “Installing the cylinder head” (5-38).
- To install the camshafts, driven sprockets and timing belt, see “Installing the camshaft, sprocket and timing belt” (5-23).
- To install the flywheel magnet, see “Replacing the timing belt” (5-11).

5

Installing the exhaust cover

1. Install the anodes ① to the exhaust cover ②, and then tighten the anode screws ③ to the specified torque.

2. Install the new gasket ④ and exhaust cover ②, and then tighten the exhaust cover bolts ⑤ to the specified torque in 2 stages and in the sequence shown.

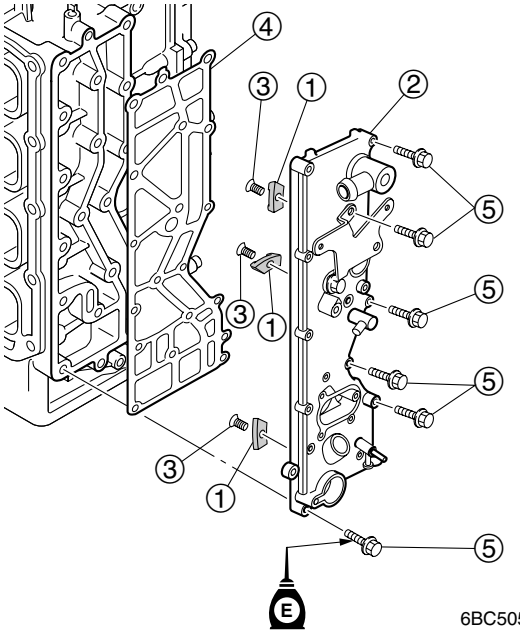

6BC50510

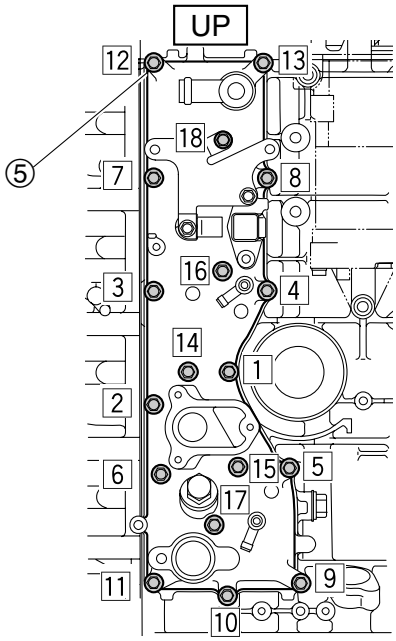

6BC50520

CAUTION:

Do not apply oil, grease or paint the anodes, otherwise they will be ineffective.

NOTE:

Apply engine oil to the exhaust cover bolts before installation.

	Anode screw ③: 3 N·m (0.3 kgf·m, 2.2 ft·lb) Exhaust cover bolt ⑤: 1st: 6 N·m (0.6 kgf·m, 4.4 ft·lb) 2nd: 12 N·m (1.2 kgf·m, 8.9 ft·lb)

3. Install the new gasket ⑥ and PCV ⑦, and then tighten the bolts ⑧. Then install the anode ⑨, and then tighten the bolt ⑩.

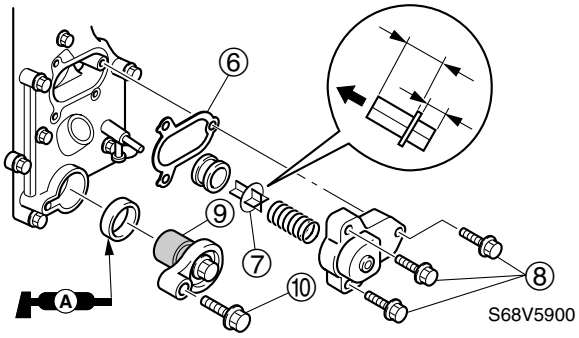

S68V5900

Installing the power unit

1. Install the dowels ①, new gasket ②, power unit, and then tighten the power unit mounting bolts ③ and ④ to the specified torque in 2 stages and in the sequence shown.

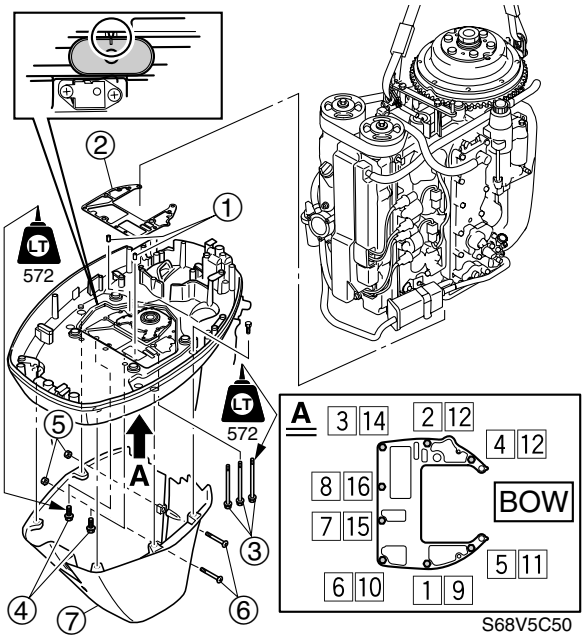

NOTE:

- Be sure to check the shift rod properly installed onto the bottom cowling before installing the power unit.
- Clean the power unit mating surface.
- Suspend the power unit from the engine hangers.

	Power unit mounting bolt (M10) ③: 1st: 42 N·m (4.2 kgf·m, 31.0 ft·lb) 2nd: 42 N·m (4.2 kgf·m, 31.0 ft·lb) Power unit mounting bolt (M8) ④: 1st: 18 N·m (1.8 kgf·m, 13.3 ft·lb) 2nd: 18 N·m (1.8 kgf·m, 13.3 ft·lb)

2. Install the apron nuts ⑤, apron screws ⑥ and apron ⑦.

	Apron screw ⑥ : 4 N·m (0.4 kgf·m, 3.0 ft·lb)

3. Install the oil dipstick.

4. Connect the shift position switch coupler ⑧. Then connect the fuel hose ⑨ to the fuel filter assembly ⑩, and then fasten the fuel hose ⑨ using the plastic tie.

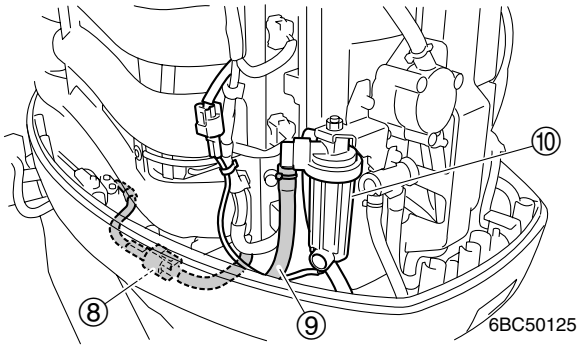

5. Connect the canister hose ⑪, cooling water hose ⑫ and flushing hose ⑬, and then fasten the hoses using the plastic ties or clamp.

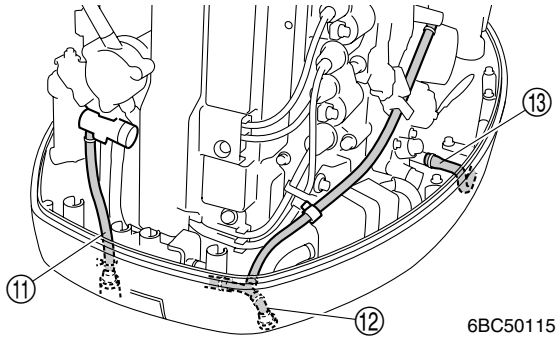

5

6. Connect the warning indicator coupler ⑭, 10-pin main harness coupler ⑮, positive battery cable ⑯ and negative battery cable ⑰.

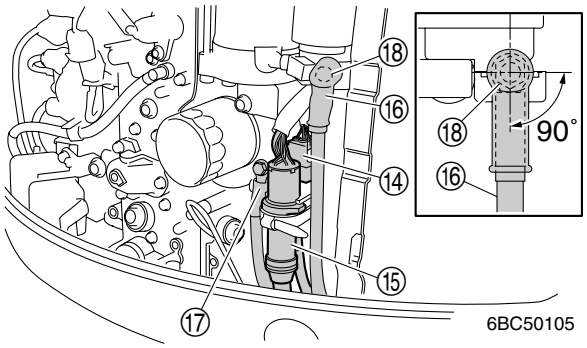

NOTE:
- Connect the warning indicator coupler to the warning indicator assembly or the tachometer.
- To route the wiring harness, see “Electrical component and wiring harness routing” (8-3, 8-11).

	Terminal nut ⑱: 9 N·m (0.9 kgf·m, 6.6 ft·lb)

7. Pass the battery cable, 10-pin main harness ⑲, YDIS communication lead, warning indicator lead ⑳, flushing hose, speedometer hose and canister hose, and then install the plate ㉑.

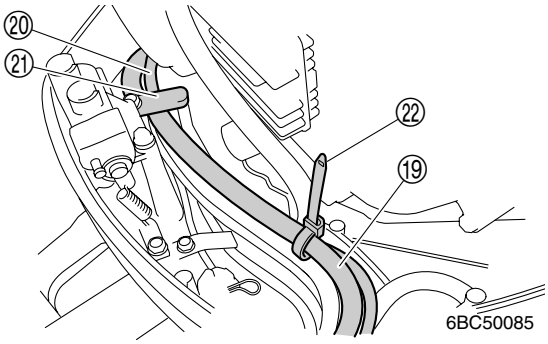

NOTE:
- Fasten the 10-pin main harness ⑲ and battery cable with the plastic tie ㉒. (tiller handle model)
- Remove the junction box cover, before routing the wiring harness.

8. Pass the fuel hose ⑨, shift cable ㉓, speedometer hose ㉔, warning indicator lead ⑳, 10-pin main harness ⑲, battery cable ㉕ and throttle cable ㉖ into the grommet ㉗.

9. Install the cable holder ㉘, grommet ㉗, grommet holder ㉙, and then install the retaining plate ㉚.

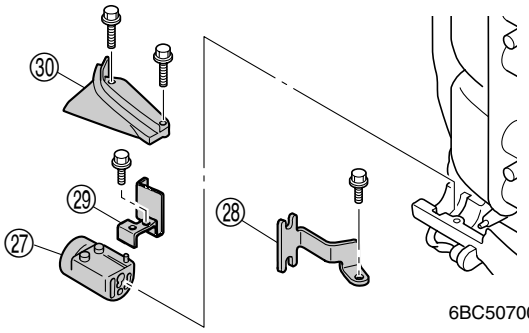

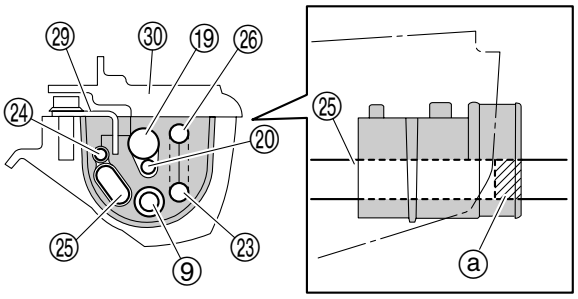

No.	Part name
⑨	Fuel hose
⑲	10-pin main harness
⑳	Warning indicator lead
㉓	Shift cable
㉔	Speedometer hose
㉕	Battery cable
㉖	Throttle cable

NOTE:
Align the white tape end ⓐ of the battery cable ㉕ with the end of the grommet.

10. Connect the throttle cable and shift cable.

NOTE:
To adjust the throttle cable and shift cable, see “Checking the throttle system” (3-9) and “Checking the gear shift system ” (3-12) .

11. Install all parts removed during disassembly and then connect the fuel hose to the fuel hose joint and battery cable to the battery terminal.

12. Fill the engine oil, and then check the engine oil level.

NOTE:

To check the engine oil level, see “Checking the engine oil” (3-5).

Recommended engine oil:
4-stroke motor oil
API: SE, SF, SG, SH, SJ or SL
SAE: 5W-30, 10W-30 or 10W-40
Engine oil quantity:
With oil filter replacement:
4.5 L (4.76 US qt, 3.96 Imp qt)

— MEMO —

Lower unit

Lower unit 6-1
Removing the lower unit 6-4
Removing the water pump and shift rod 6-5
Checking the water pump and shift rod 6-5

Propeller shaft housing 6-6
Removing the propeller shaft housing assembly 6-8
Disassembling the propeller shaft assembly 6-8
Disassembling the propeller shaft housing 6-9
Checking the propeller shaft housing 6-10
Checking the reverse gear 6-10
Checking the propeller shaft 6-10
Checking the dog clutch and shift rod joint 6-10
Assembling the propeller shaft housing 6-10
Assembling the propeller shaft assembly 6-12

Drive shaft and lower case 6-13
Removing the drive shaft 6-14
Disassembling the drive shaft housing 6-14
Disassembling the forward gear 6-14
Disassembling the lower case 6-15
Checking the pinion and forward gear 6-15
Checking the drive shaft 6-15
Checking the lower case 6-16
Assembling the forward gear 6-16
Assembling the drive shaft housing 6-16
Assembling the lower case 6-17
Installing the drive shaft 6-17
Installing the propeller shaft housing 6-18
Installing the shift rod 6-19
Installing the water pump 6-19
Installing the lower unit 6-21

Shimming 6-23
Shimming 6-24
Selecting the pinion shim 6-24
Selecting the forward gear shim 6-26
Selecting the reverse gear shim 6-27

Backlash 6-28
Measuring the forward and reverse gear backlash 6-28

Lower unit

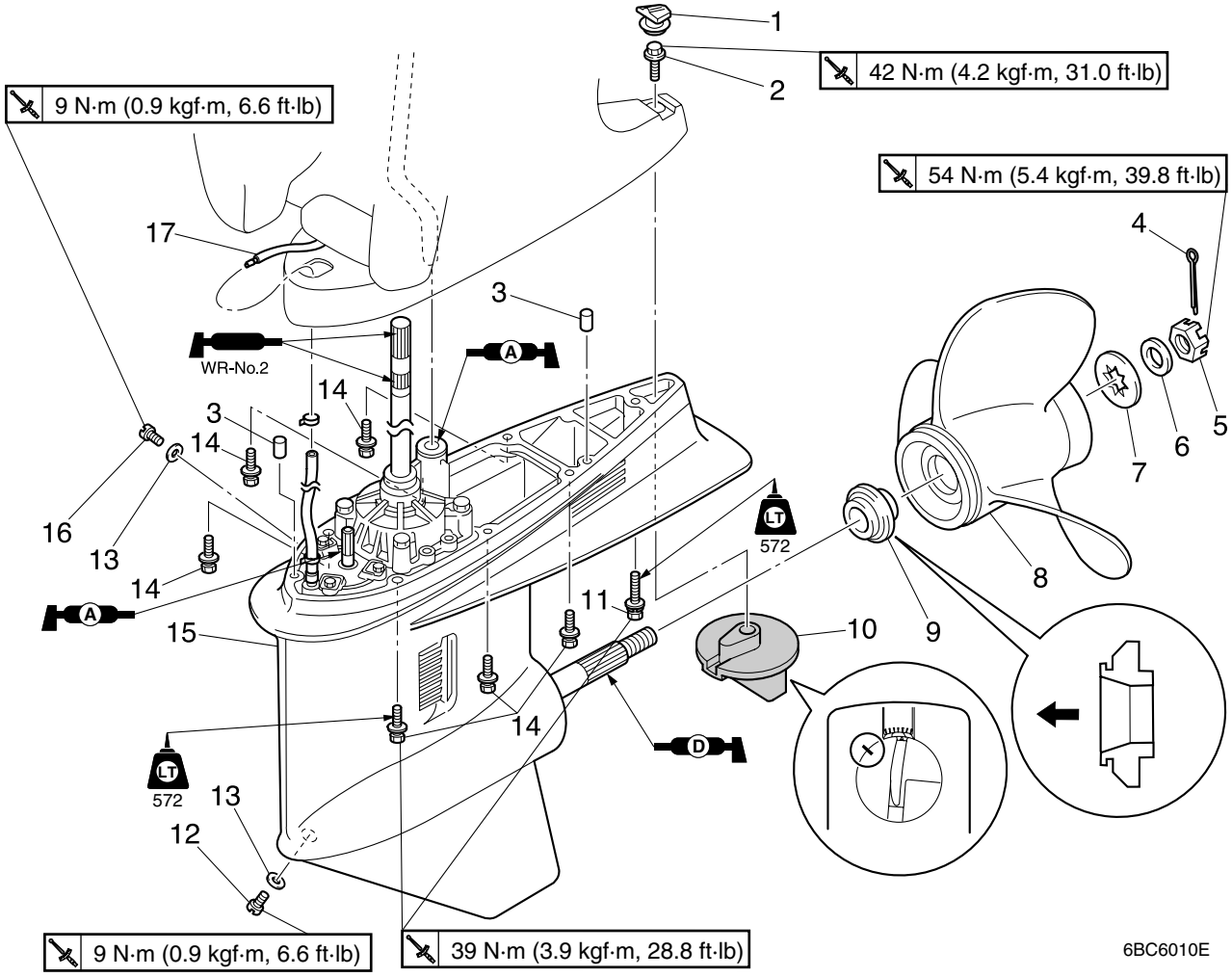

No.	Part name	Q'ty	Remarks
1	Grommet	1	
2	Bolt	1	M10 × 45 mm
3	Dowel	2	
4	Cotter pin	1	Not reusable
5	Propeller nut	1	
6	Washer	1	
7	Spacer	1	
8	Propeller	1	
9	Spacer	1	
10	Trim tab	1	
11	Bolt	1	M10 × 70 mm
12	Drain screw	1	
13	Gasket	2	Not reusable
14	Bolt	6	M10 × 45 mm
15	Lower unit	1	
16	Check screw	1	
17	Speedometer hose	1	

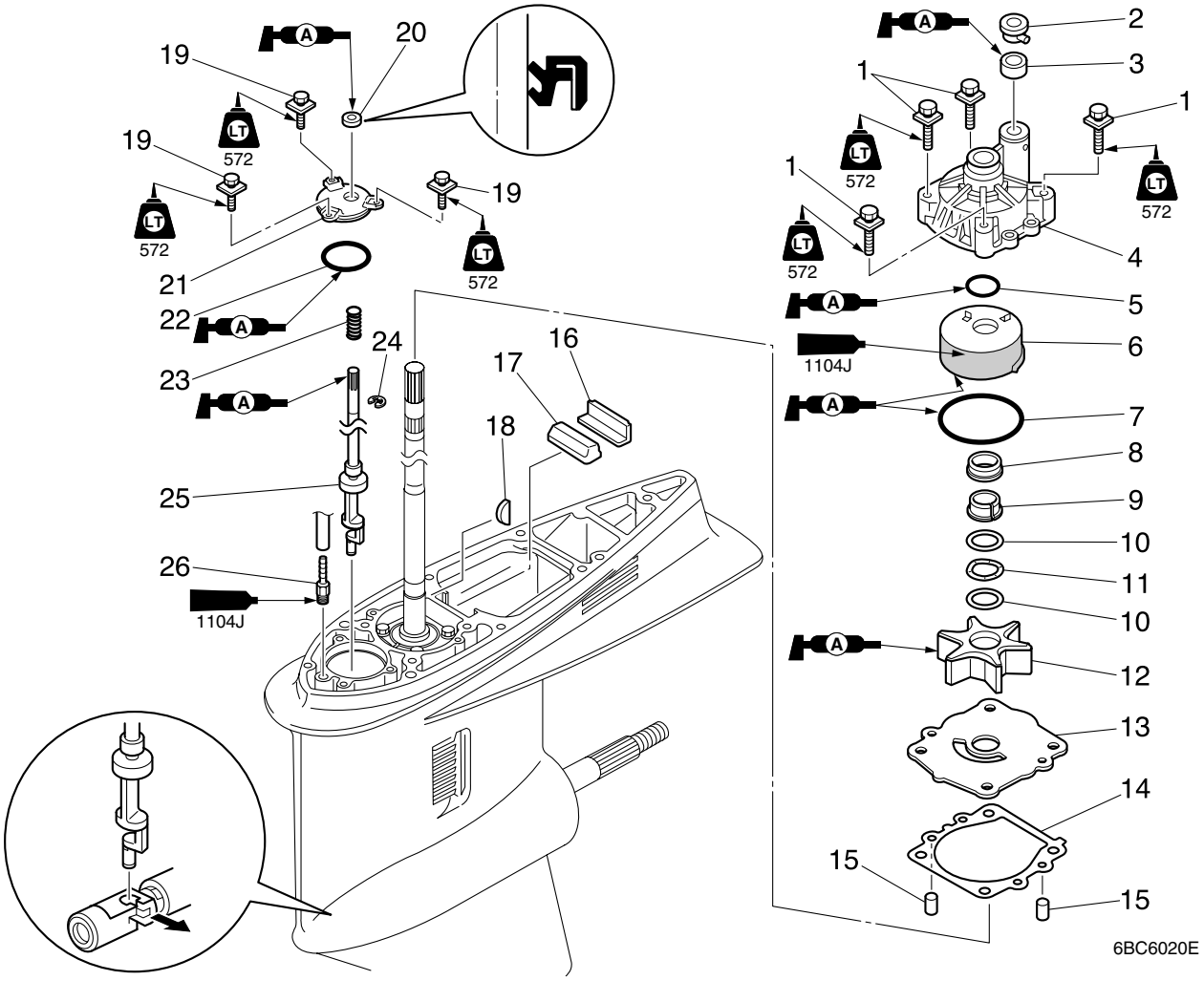

No.	Part name	Q'ty	Remarks
1	Bolt	4	M8 × 45 mm
2	Cover	1	
3	Seal	1	
4	Water pump housing	1	
5	O-ring	1	Not reusable
6	Insert cartridge	1	
7	O-ring	1	Not reusable
8	Collar	1	
9	Spacer	1	
10	Washer	2	
11	Wave washer	1	
12	Impeller	1	
13	Outer plate cartridge	1	
14	Gasket	1	Not reusable
15	Dowel	2	
16	Plate	1	
17	Rubber seal	1	

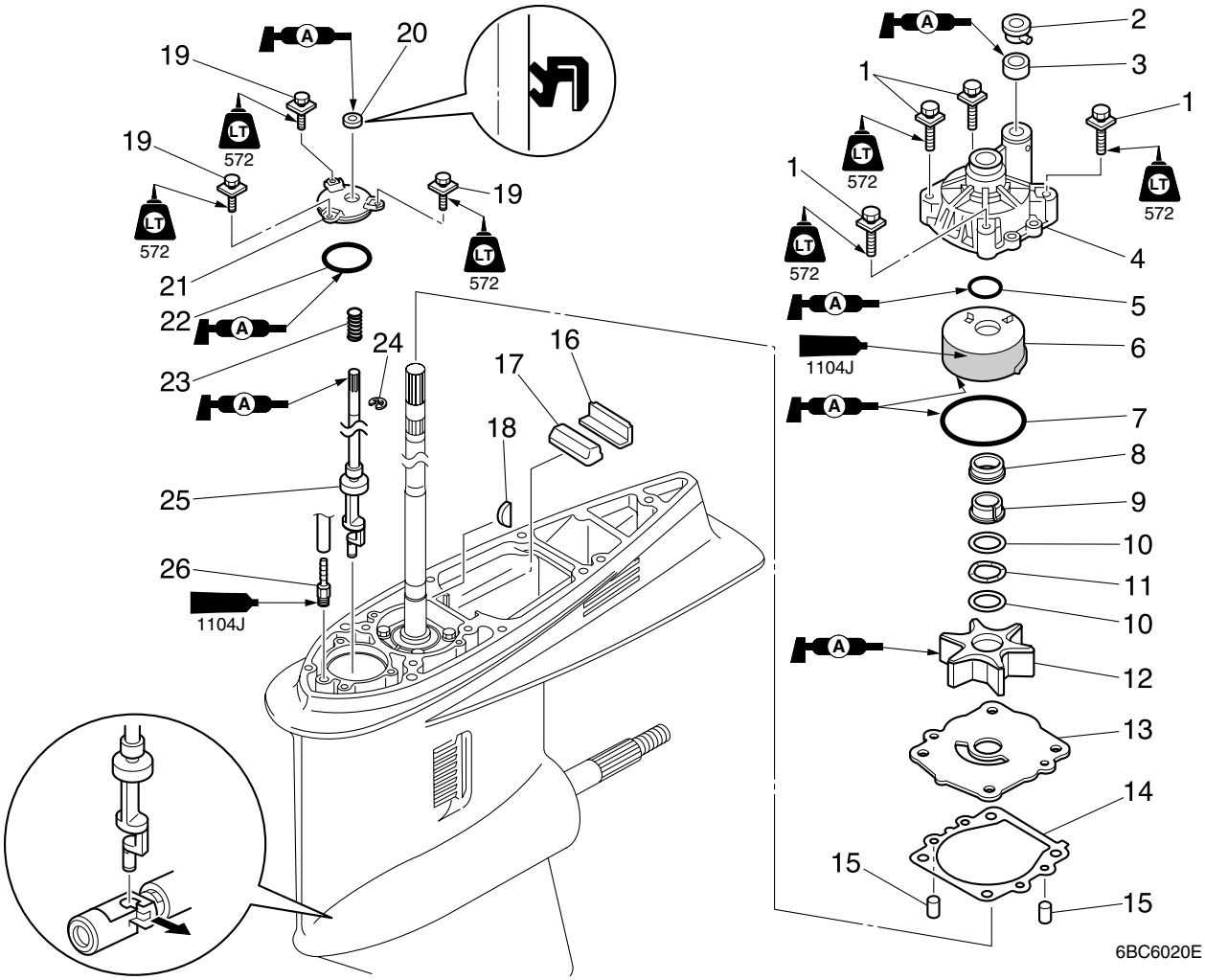

No.	Part name	Q'ty	Remarks
18	Woodruff key	1	
19	Bolt	3	M6 × 20 mm
20	Oil seal	1	Not reusable
21	Oil seal housing	1	
22	O-ring	1	Not reusable
23	Spring	1	
24	Circlip	1	
25	Shift rod	1	
26	Hose nipple	1	

Removing the lower unit

⚠WARNING

When removing the lower unit with the power unit installed, be sure to suspend the outboard motor. Otherwise, the outboard motor could suddenly fall and result in severe injury.

1. Drain the gear oil.

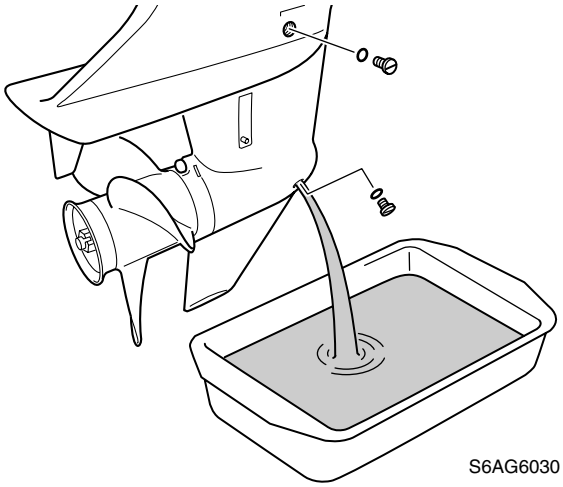

2. Set the gear shift to the “N” position, place a block of wood between the anti-cavitation plate and propeller to keep the propeller from turning, and then remove the propeller nut and propeller.

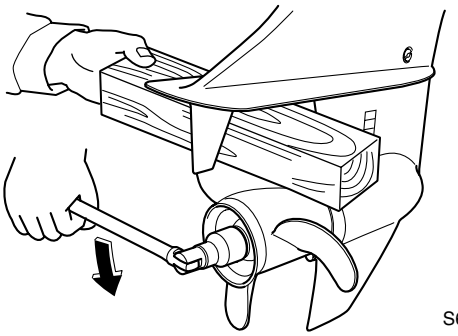

⚠WARNING

- **Do not hold the propeller with your hands when loosening or tightening it.**
- **Be sure to disconnect the battery cables from the battery and remove the clip from the engine stop lanyard switch.**

3. Remove the grommet ①, trim tab bolt ② and trim tab ③.

NOTE:
Mark the trim tab at the area shown.

4. Remove the lower unit from the upper case by removing the lower unit mounting bolts ④ and ⑤.

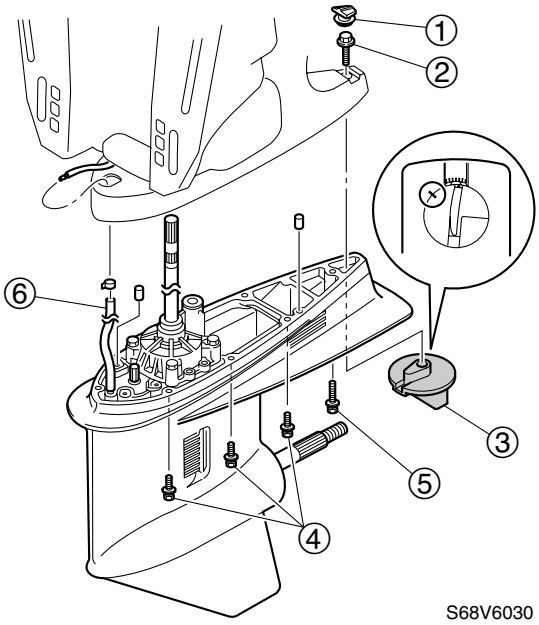

NOTE:
When removing the lower unit, also disconnect the speedometer hose ⑥.

6

Removing the water pump and shift rod

1. Remove the water pump housing ①, collar ②, spacer ③, washers ④, wave washer ⑤ and impeller ⑥.

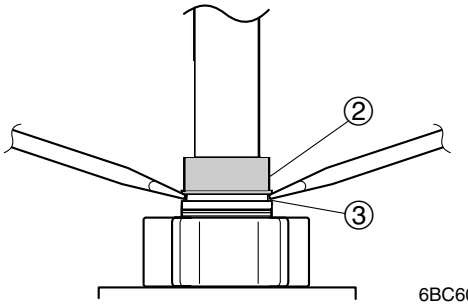

NOTE:
Remove the collar ② as shown.

2. Remove the Woodruff key ⑦, outer plate cartridge ⑧, gasket ⑨ and dowels ⑩.

3. Set the gear shift to the "N" position, and then remove the shift rod assembly ⑪.

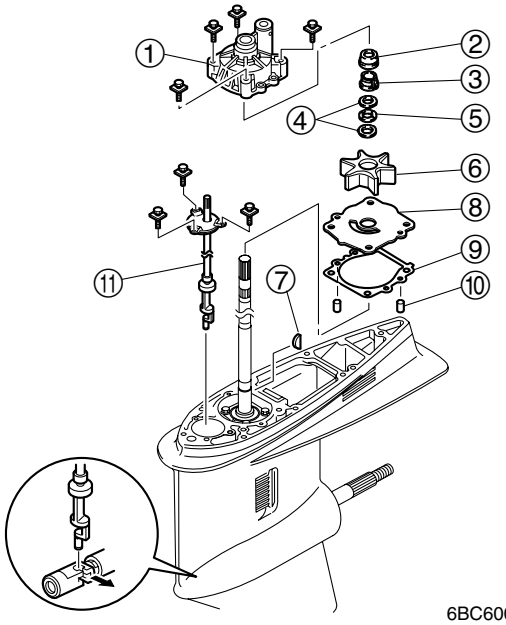

Shift rod push arm:
90890-06052

Checking the water pump and shift rod

1. Check the water pump housing. Replace if deformed.

NOTE:
If the engine overheated, the inside of the water pump housing may be deformed, therefore be sure to remove the insert cartridge when checking the housing.

2. Check the impeller, insert cartridge and outer plate cartridge. Replace if cracked or worn.

3. Check the Woodruff key and keyway in the drive shaft. Replace if worn.

4. Check the shift rod. Replace if bent or worn.

Propeller shaft housing

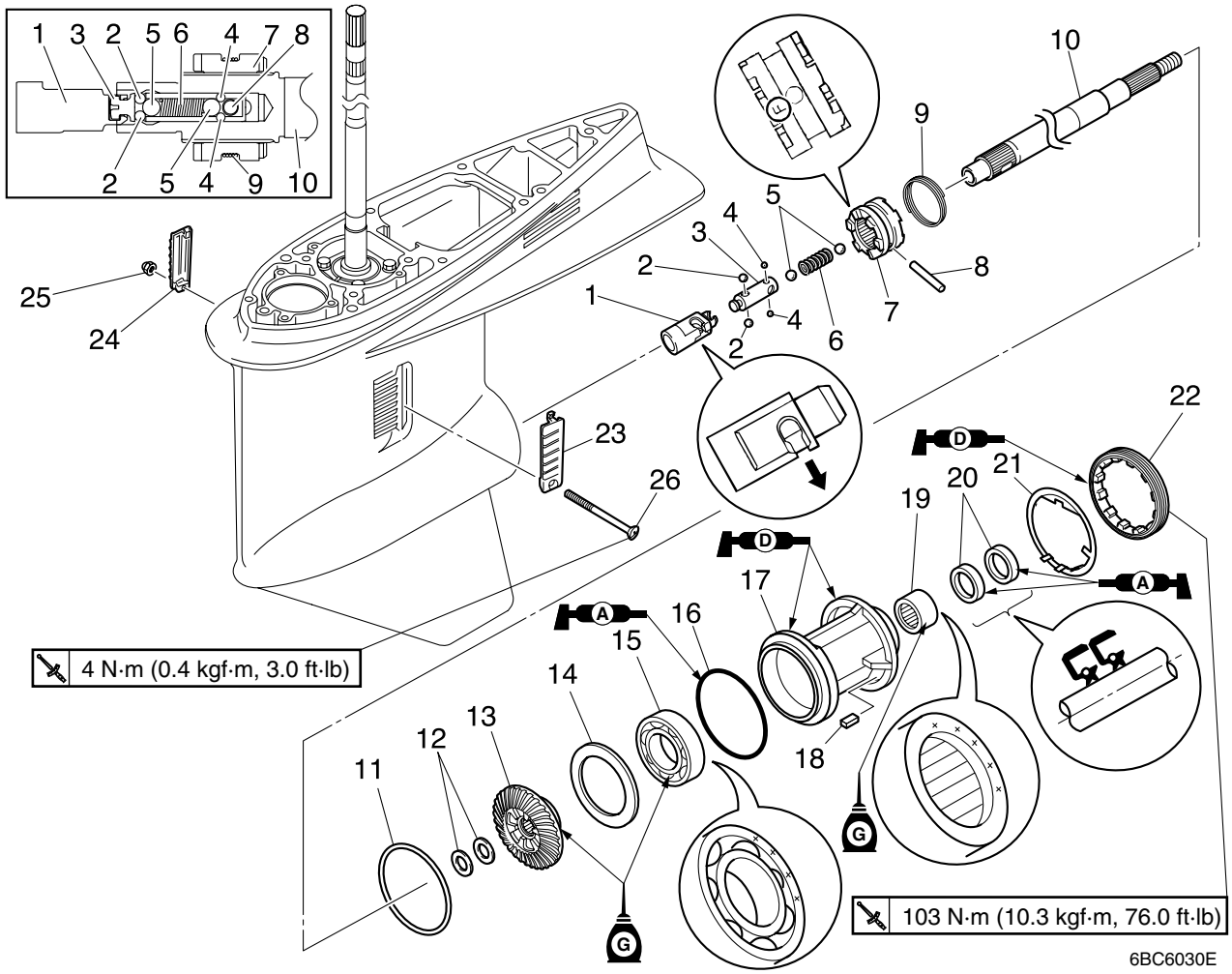

No.	Part name	Q'ty	Remarks
1	Shift rod joint	1	
2	Ball	2	Medium
3	Slider	1	
4	Ball	2	Small
5	Ball	2	Large
6	Spring	1	
7	Dog clutch	1	
8	Cross pin	1	
9	Spring	1	
10	Propeller shaft	1	
11	Reverse gear shim	—	
12	Washer	2	
13	Reverse gear	1	
14	Thrust washer	1	
15	Ball bearing	1	Not reusable
16	O-ring	1	Not reusable
17	Propeller shaft housing	1	

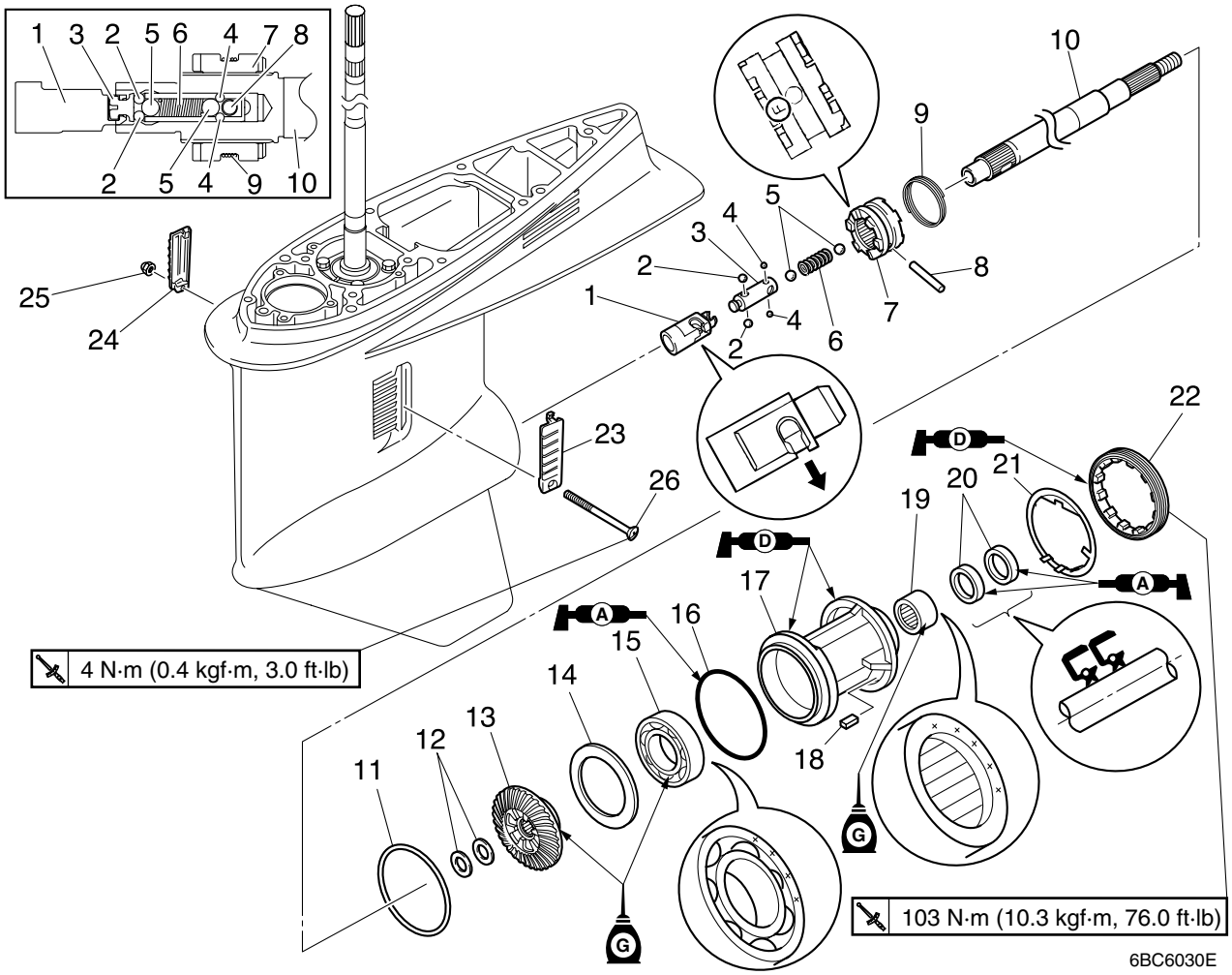

No.	Part name	Q'ty	Remarks
18	Straight key	1	
19	Needle bearing	1	Not reusable
20	Oil seal	2	Not reusable
21	Claw washer	1	
22	Ring nut	1	
23	Cooling water inlet cover	1	
24	Cooling water inlet cover	1	
25	Nut	1	
26	Screw	1	ø5 × 48 mm

Removing the propeller shaft housing assembly

1. Remove the shift rod.

NOTE:
Be sure to remove the shift rod, before removing the propeller shaft housing assembly from the lower case.

2. Straighten the one tab ① of the claw washer.

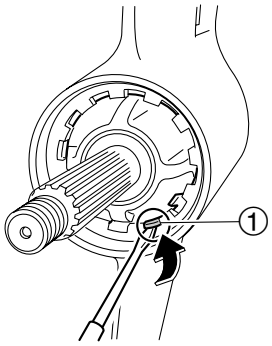

3. Remove the ring nut and claw washer from the lower case.

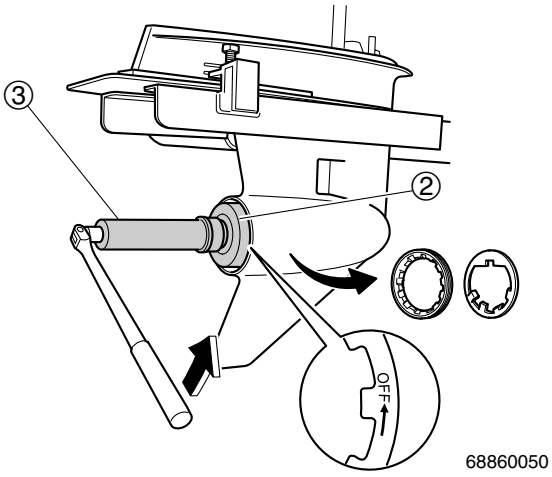

NOTE:
When removing the ring nut turn it toward "OFF".

	Ring nut wrench 3 ②: 90890-06511 Ring nut wrench extension ③: 90890-06513

4. Remove the propeller shaft housing ④, straight key ⑤, and then remove the propeller shaft assembly and reverse gear shim(s) from the lower case.

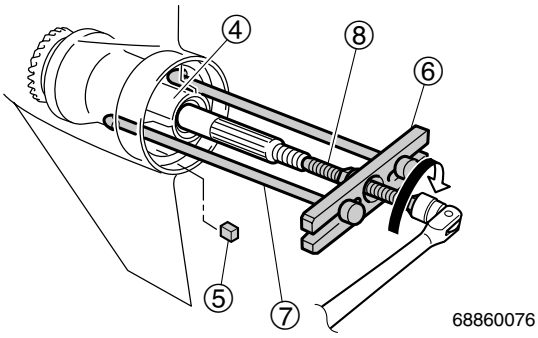

	Stopper guide plate ⑥: 90890-06501 Bearing housing puller claw L ⑦: 90890-06502 Center bolt ⑧: 90890-06504

Disassembling the propeller shaft assembly

1. Remove the spring ①, and then remove the cross pin ② and dog clutch ③.

2. Remove the balls ④, ⑤, spring ⑥, slider ⑦ and shift rod joint ⑧.

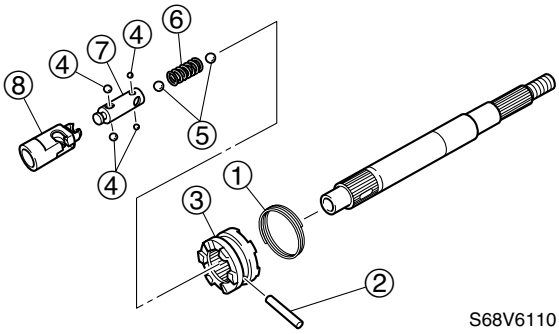

NOTE:
Take care not to lose the balls ④ and ⑤ when removing the slider ⑦ from the propeller shaft.

6

Disassembling the propeller shaft housing

1. Remove the reverse gear and thrust washer.

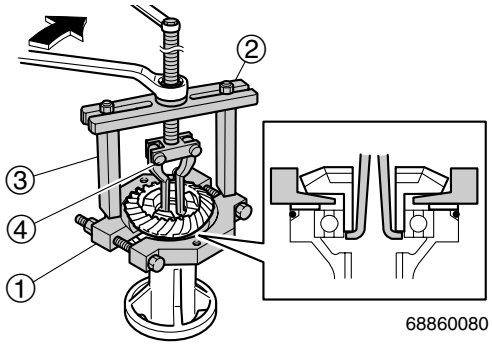

Bearing separator ①: 90890-06534
Stopper guide plate ②:
90890-06501
Stopper guide stand ③:
90890-06538
Bearing puller assembly ④:
90890-06535

2. Remove the ball bearing 5 from the propeller shaft housing.

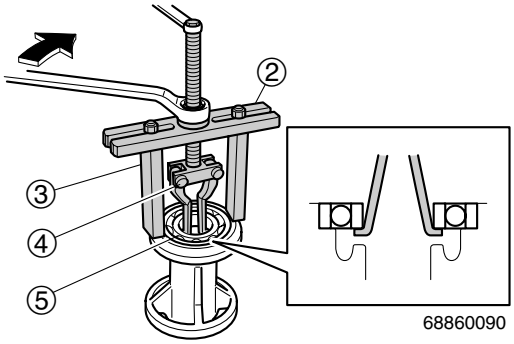

CAUTION:

Do not reuse the bearing, always replace it with a new one.

Stopper guide plate ②:
90890-06501
Stopper guide stand ③:
90890-06538
Bearing puller assembly ④:
90890-06535

3. Remove the oil seals ⑧ with needle bearing ⑨.

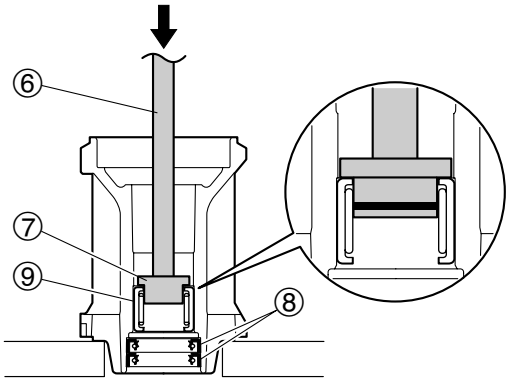

CAUTION:

Do not reuse the bearing, always replace it with a new one.

Driver rod L3 ⑥:
90890-06652
Needle bearing attachment ⑦:
90890-06653

Checking the propeller shaft housing

1. Check the propeller shaft housing. Replace if corroded, cracked or damaged.

Checking the reverse gear

1. Check the teeth and dogs of the reverse gear. Replace if cracked or worn.

Checking the propeller shaft

1. Check the propeller shaft spline. Replace if damaged or worn.

2. Measure the propeller shaft runout. Replace if above specification.

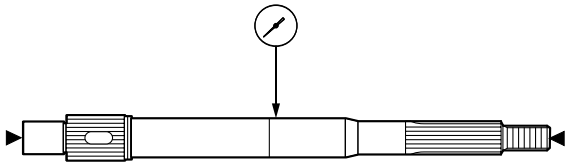

S68V6180

Runout limit: 0.02 mm (0.0008 in)

Checking the dog clutch and shift rod joint

1. Check the dog clutch, shift rod joint, slider, cross pin, balls and spring. Replace if cracked or worn.

NOTE:

To check the shift rod, see “Checking the water pump and shift rod” (6-5).

Assembling the propeller shaft housing

1. Install a new needle bearing into the propeller shaft housing to the specified depth.

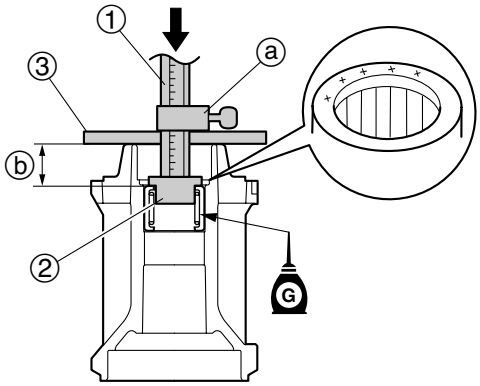

6BC60030

NOTE:

- Install a new needle bearing with the identification mark facing upward as shown.
- Be careful not to let the stopper ⓐ get out of position when using the driver rod.

Driver rod SS ①:
90890-06604
Needle bearing attachment ②:
90890-06610
Bearing depth plate ③:
90890-06603

Installation depth ⓑ :
25.00 ± 0.25 mm (0.984 ± 0.010 in)

6

2. Install the new oil seals into the propeller shaft housing to the specified depth.

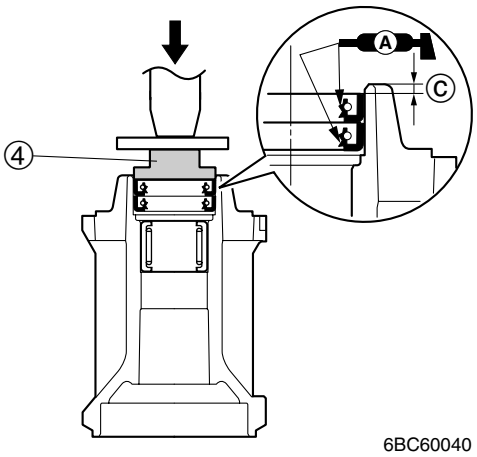

Bearing inner race attachment ④:
90890-06640

Installation depth ⓒ:
5.00 ± 0.25 mm (0.197 ± 0.010 in)

3. Install the thrust washer ⑤ and new ball bearing ⑥ onto the reverse gear ⑦ using a press.

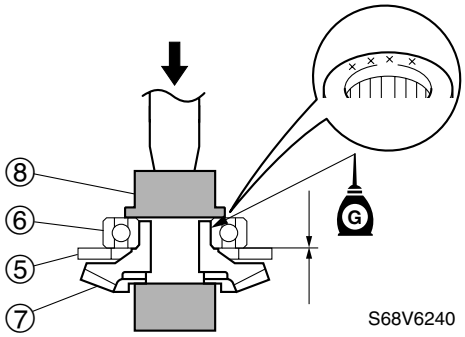

NOTE:
Install a new ball bearing with the identification mark facing upward as shown.

Needle bearing attachment ⑧:
90890-06654

4. Install the reverse gear assembly into the propeller shaft housing using a press.

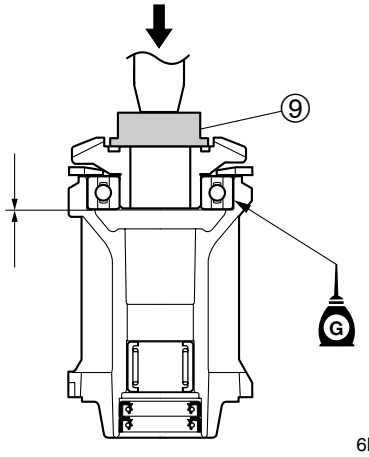

NOTE:
After installing the reverse gear, check that the reverse gear rotates smoothly.

Needle bearing attachment ⑨:
90890-06654

5. Install a new O-ring ⑩.

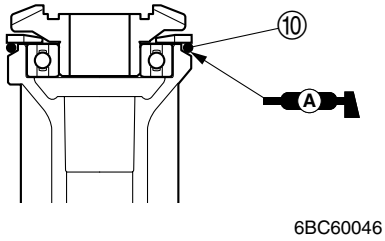

Assembling the propeller shaft assembly

1. Install the dog clutch ① onto the propeller shaft ②.

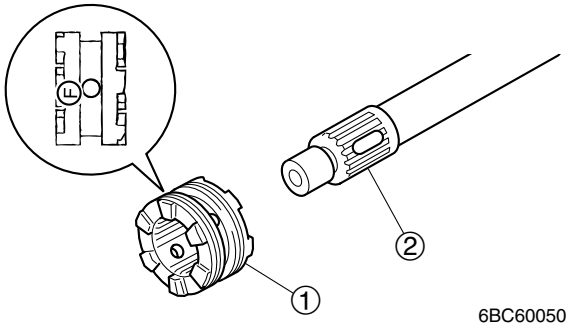

NOTE:
- Face the "F" mark side to the direction shown.
- Align the hole in the dog clutch ① with the hole in the propeller shaft ②, when installing the dog clutch ①.

2. Install the balls ③, spring ④ into the slider ⑤ as shown.

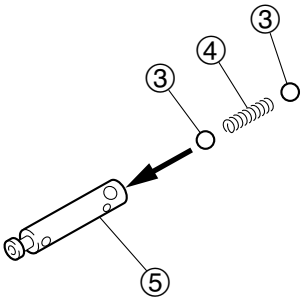

3. Install the balls ⑥ and ⑦ into the slider ⑤, and then install the slider ⑤ into the propeller shaft ②.

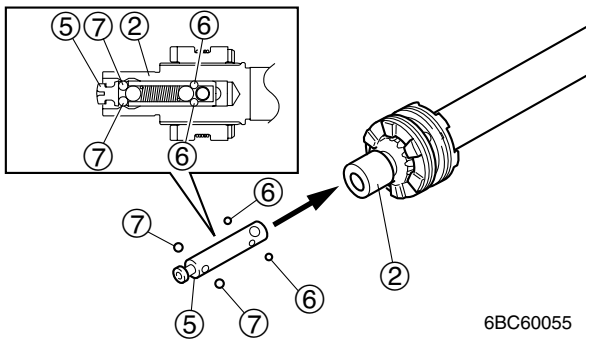

4. Install the cross pin ⑧ and spring ⑨.

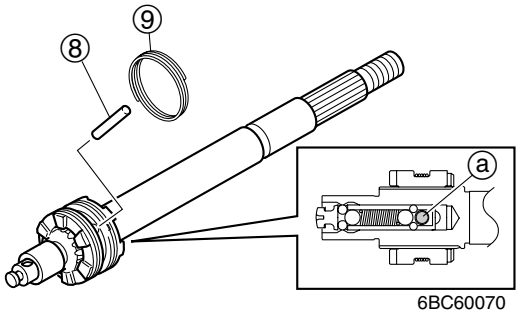

NOTE:
Align the hole in the dog clutch with the hole ⓐ in the slider, when install the cross pin.

5. Hook the shift rod joint ⑩ onto the knob on the end of the slider.

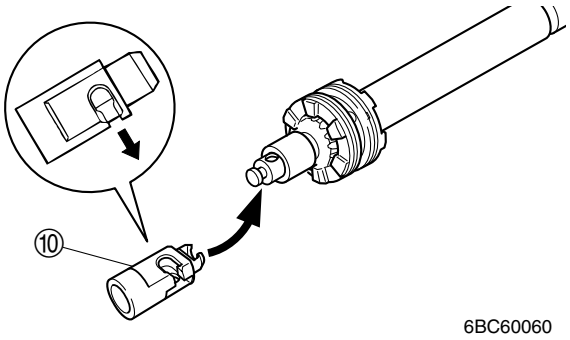

6. Check that the dog clutch operates smoothly. If necessary, repeat the steps 1–5.

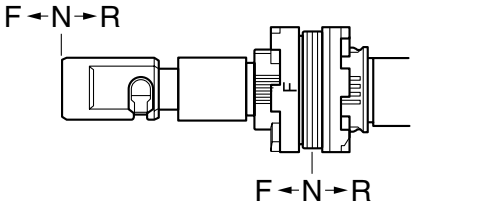

Drive shaft and lower case

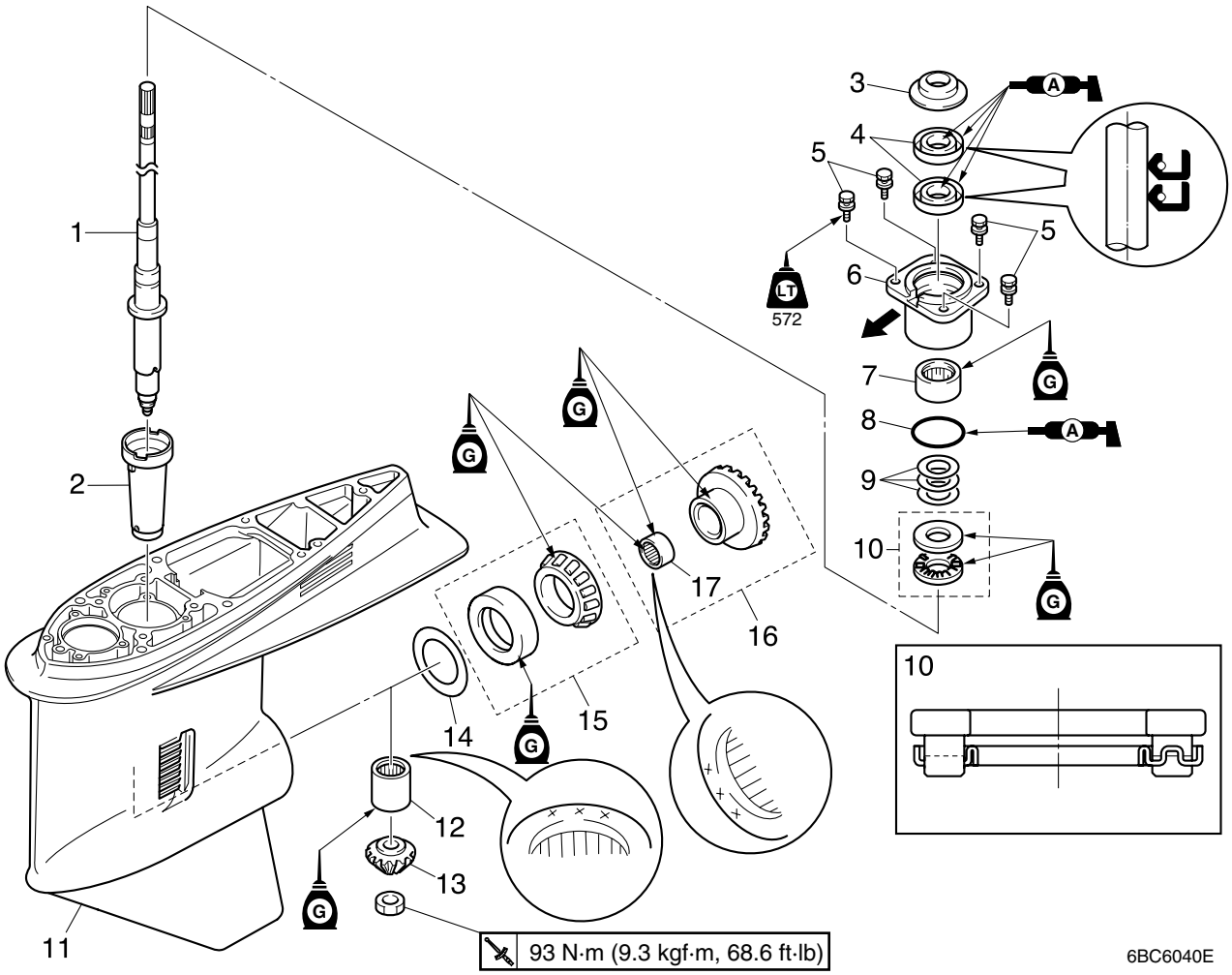

No.	Part name	Q'ty	Remarks
1	Drive shaft	1	L-transom model/X-transom model
2	Drive shaft sleeve	1	
3	Cover	1	
4	Oil seal	2	Not reusable
5	Bolt	4	M8 × 25 mm
6	Drive shaft housing	1	
7	Needle bearing	1	Not reusable
8	O-ring	1	Not reusable
9	Pinion shim	—	
10	Thrust bearing	1	
11	Lower case	1	
12	Needle bearing	1	Not reusable
13	Pinion	1	
14	Forward gear shim	—	
15	Taper roller bearing	1	Not reusable
16	Forward gear assembly	1	
17	Needle bearing	1	Not reusable

Removing the drive shaft

1. Loosen the pinion nut ① as shown.

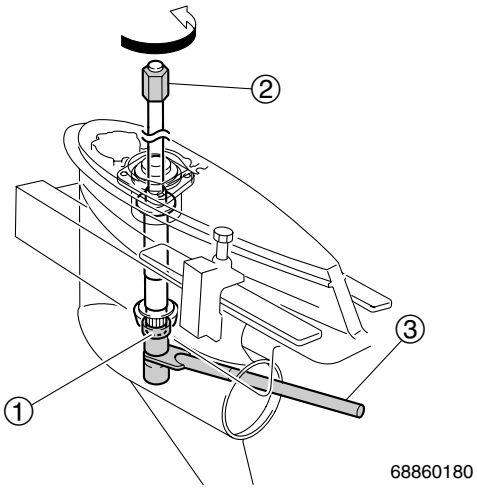

	Drive shaft holder 5 ②: 90890-06519 Pinion nut holder ③: 90890-06715

2. Remove the drive shaft housing ④, shim(s) ⑤ and thrust bearing ⑥.

3. Remove the pinion nut ①, drive shaft ⑦, pinion ⑧, drive shaft sleeve ⑨ and forward gear assembly ⑩.

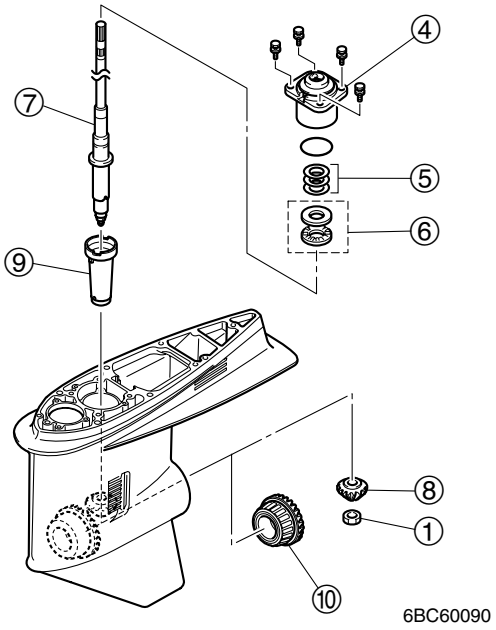

Disassembling the drive shaft housing

1. Remove the cover, O-ring, oil seals and needle bearing.

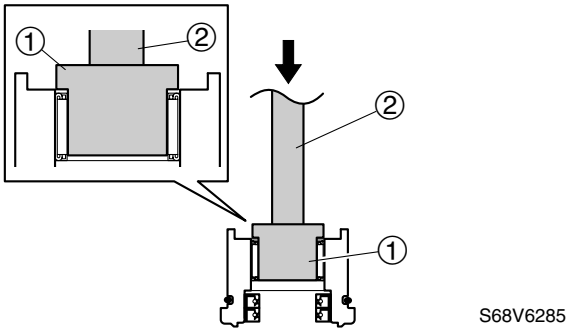

CAUTION:

Do not reuse the bearing, always replace it with a new one.

	Needle bearing attachment ①: 90890-06610 Driver rod L3 ②: 90890-06652

Disassembling the forward gear

1. Remove the taper roller bearing from the forward gear using a press.

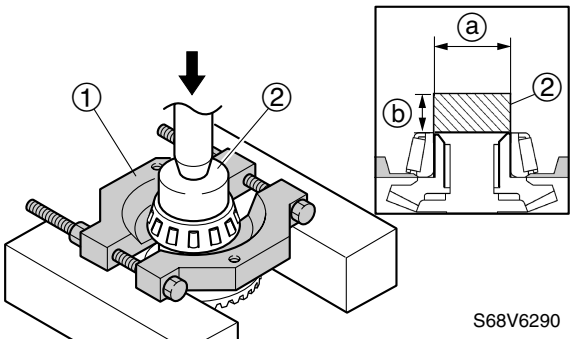

CAUTION:

Do not reuse the bearing, always replace it with a new one.

NOTE:

Use a solid cylinder ② with an outer diameter ⓐ of 42 mm (1.65 in) and height ⓑ of 30 mm (1.18 in) to remove the forward gear.

	Bearing separator ①: 90890-06534

6

2. Remove the needle bearing from the forward gear using a chisel.

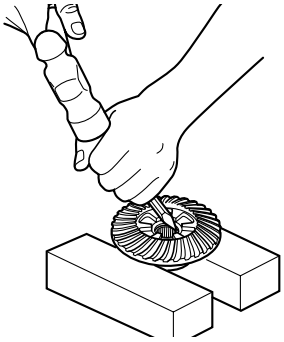

CAUTION:

Do not reuse the bearing, always replace it with a new one.

Disassembling the lower case

1. Remove the needle bearing.

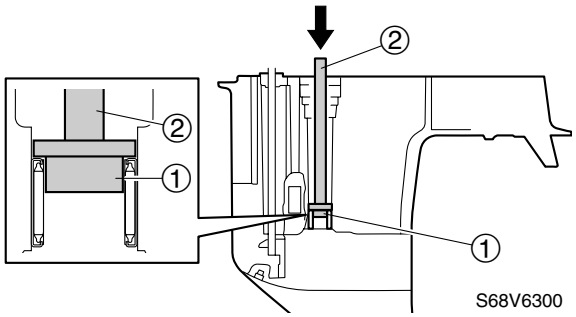

CAUTION:

Do not reuse the bearing, always replace it with a new one.

Needle bearing attachment ①: 90890-06609
Driver rod L3 ②: 90890-06652

2. Remove the taper roller bearing outer race and shim(s).

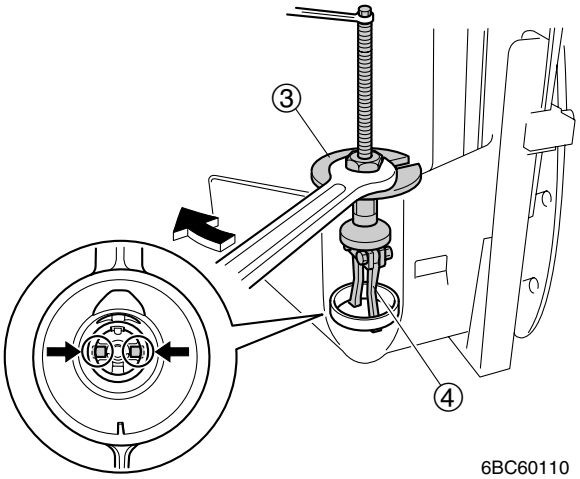

Bearing outer race puller assembly ③: 90890-06523
Outer race puller claw A ④: 90890-06532

Checking the pinion and forward gear

1. Check the teeth of pinion. Check the teeth and dogs of forward gear. Replace the pinion and forward gear if cracked or worn.

Checking the drive shaft

1. Check the drive shaft spline. Replace if damaged or worn.

2. Measure the drive shaft runout. Replace if above specification.

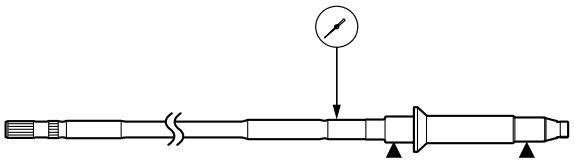

S68V6330

Runout limit: 0.2 mm (0.008 in)

Checking the lower case

1. Check the skeg, anti-cavitation plate and torpedo. Replace the lower case if cracked or damaged.

Assembling the forward gear

1. Install a new needle bearing into the forward gear to the specified depth.

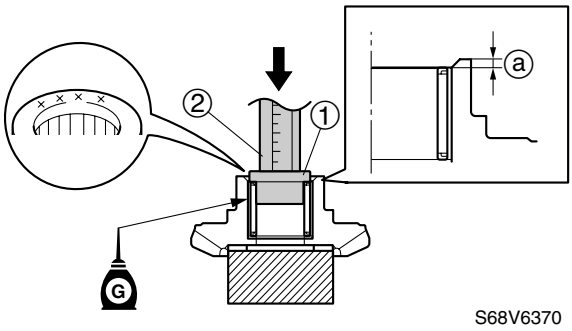

NOTE:
Install a new needle bearing with the identification mark facing upward as shown.

Needle bearing attachment ①:
90890-06612
Driver rod SS ②: 90890-06604

Installation depth ⓐ :
3.00 ± 0.50 mm (0.118 ± 0.020 in)

2. Install a new taper roller bearing into the forward gear using a press.

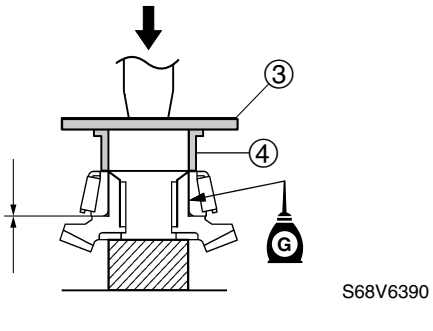

Magnet base plate ③: 90890-07003
Bearing inner race attachment ④:
90890-06661

Assembling the drive shaft housing

1. Install a new needle bearing into the drive shaft housing to the specified depth.

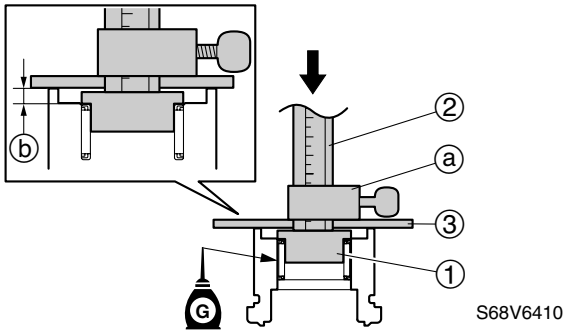

NOTE:
Be careful not to let the stopper ⓐ get out of position when using the driver rod.

Needle bearing attachment ①:
90890-06610
Driver rod SS ②: 90890-06604
Bearing depth plate ③:
90890-06603

Installation depth ⓑ:
6.00 ± 0.25 mm (0.236 ± 0.01 in)

2. Install new oil seals into the drive shaft housing to the specified depth, and then install the cover and new O-ring.

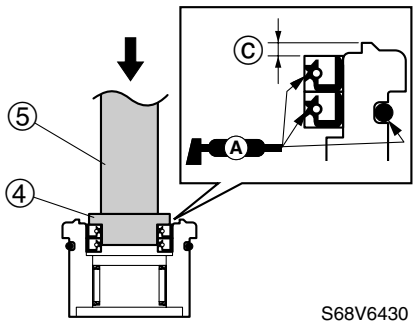

Ball bearing attachment ④:
90890-06633
Driver rod LS ⑤: 90890-06606

Installation depth ⓒ:
0.50 ± 0.25 mm (0.0197 ± 0.01 in)

6

Assembling the lower case

1. Install the original shim(s) and new taper roller bearing outer race.

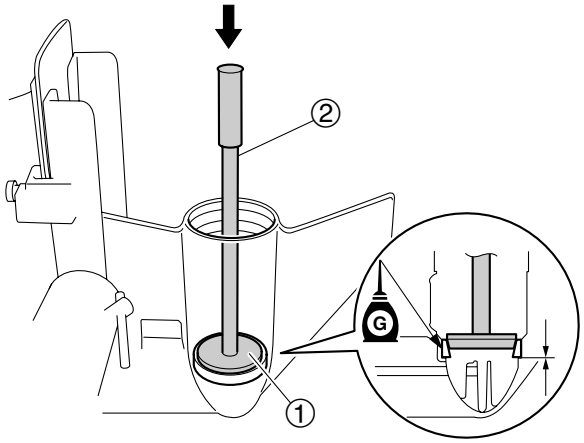

68860300

NOTE:
Be sure to select the forward gear shim(s) if the lower case or taper roller bearing is replaced. To select the shim(s), see "Shimming" (6-23).

Bearing outer race attachment ①: 90890-06620
Driver rod LL ②: 90890-06605

2. Install a new needle bearing into the lower case to the specified depth.

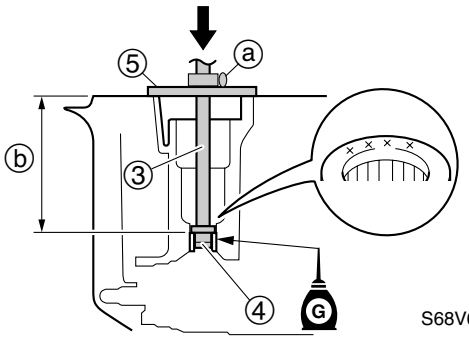

S68V6350

NOTE:
- Install a new needle bearing with the identification mark facing upward as shown.
- Be careful not to let the stopper ⓐ get out of position when using the driver rod.

Driver rod SL ③: 90890-06602
Needle bearing attachment ④: 90890-06609
Bearing depth plate ⑤: 90890-06603

Installation depth ⓑ: 184 mm (7.24in)

Installing the drive shaft

1. Install the forward gear assembly ①, drive shaft sleeve ②, drive shaft ③, pinion ④ and pinion nut ⑤ into the lower case.

2. Install the thrust bearing ⑥ and original shim(s) ⑦ onto the drive shaft ③.

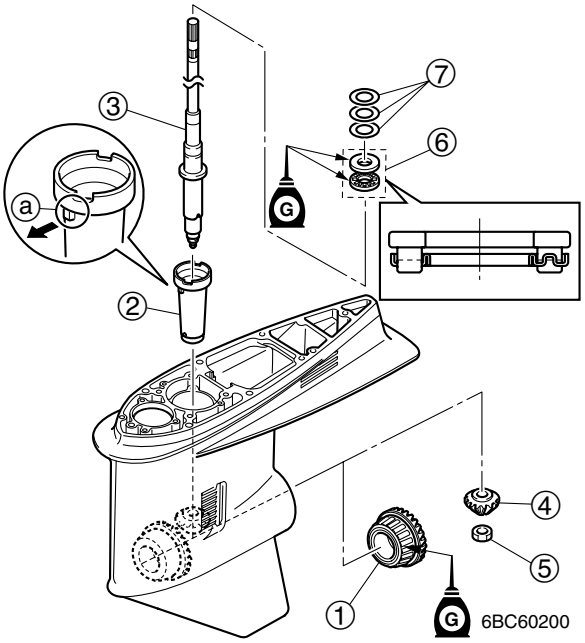

6BC60200

NOTE:
- Install the drive shaft sleeve with the projection ⓐ facing forward as shown.
- When installing the pinion ④, lift up the drive shaft ③ slightly, and then align the gear and shaft splines.
- Install the thrust bearing in the direction shown.
- Be sure to select the pinion shim(s) if replacing the thrust bearing, drive shaft housing, drive shaft or lower case. To select the shim(s), see "Shimming" (6-23).

3. Install the drive shaft housing ⑧, and then tighten the drive shaft housing bolts ⑨.

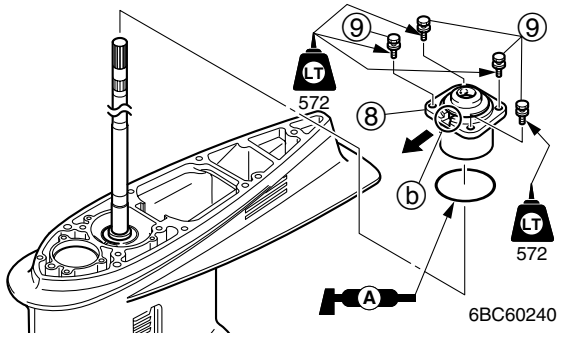

NOTE:
Install the drive shaft housing with the cutaway ⓑ in the housing facing forward as shown.

4. Tighten the pinion nut ⑤ to the specified torque.

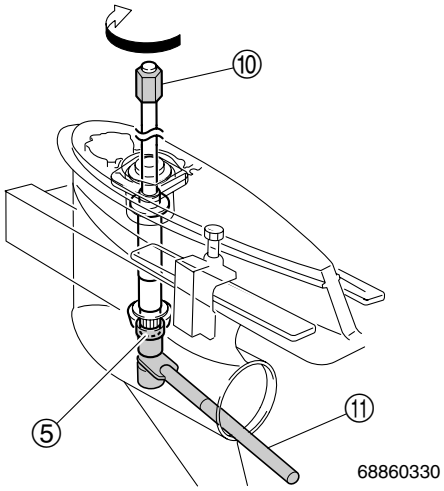

	Drive shaft holder 5 ⑩: 90890-06519 Pinion nut holder ⑪: 90890-06715

	Pinion nut ⑤: 93 N·m (9.3 kgf·m, 68.6 ft·lb)

Installing the propeller shaft housing

1. Set the shift rod joint ① and dog clutch ② to the "N" position as shown.

2. Install the washers ③ and propeller shaft assembly ④ into the propeller shaft housing ⑤.

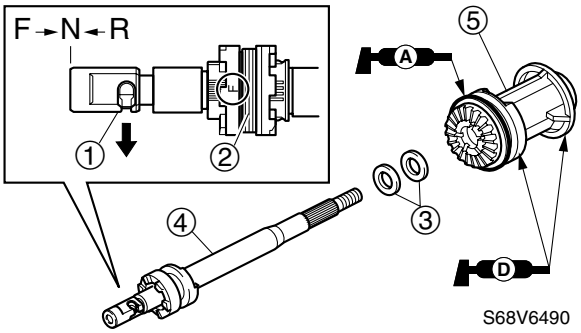

3. Install the original shim(s) ⑥ and propeller shaft housing assembly ⑦ into the lower case, and then install the straight key ⑧, claw washer ⑨ and ring nut ⑩.

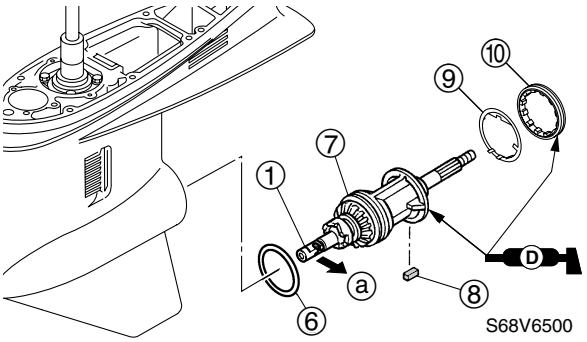

NOTE:
- Install the propeller shaft housing assembly ⑦, with the cutaway in the shift rod joint ① facing in the direction ⓐ.
- Be sure to select the reverse gear shim(s) if replacing the reverse gear, ball bearing, propeller shaft housing, thrust washer or lower case. To select the shim(s), see "Shimming" (6-23).

6

4. Tighten the ring nut ⑩ to the specified torque.

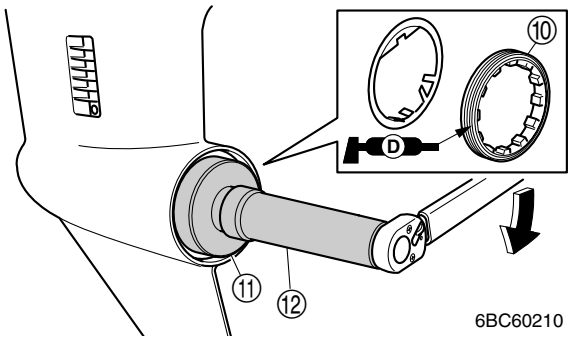

6BC60210

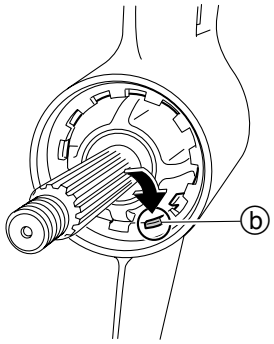

6F600065

NOTE:
Bend the one tab ⓑ of the claw washer aligned with one lobe of the ring nut slot.

	Ring nut wrench 3 ⑪: 90890-06511 Ring nut wrench extension ⑫: 90890-06513

	Ring nut ⑩: 103 N·m (10.3 kgf·m, 76.0 ft·lb)

Installing the shift rod

1. Install the shift rod assembly ①.

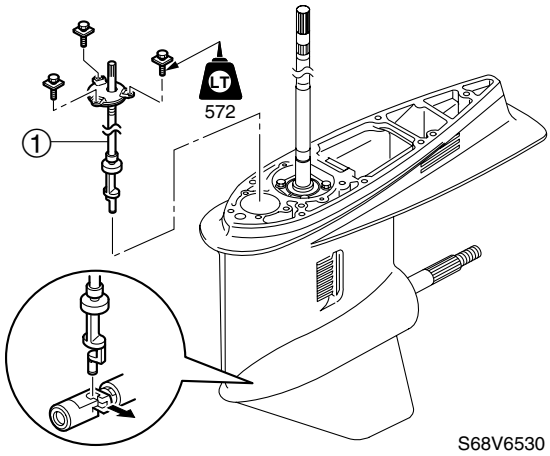

S68V6530

NOTE:
- Set the gear shift to the “N” position when installing the shift rod.
- After assembling the lower unit, check that the shift rod operates smoothly. Check also that the drive shaft and propeller shaft rotate smoothly.
- Be sure to measure the backlash before installing the water pump. To measure the backlash, see “Measuring the forward and reverse gear backlash” (6-28).

Installing the water pump

1. Install the dowels ①, new gasket ② and outer plate cartridge ③.

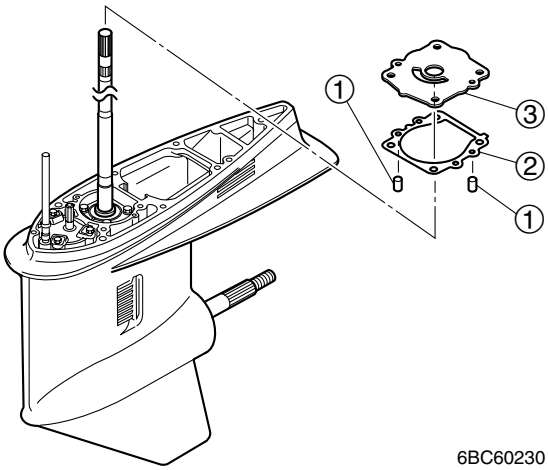

6BC60230

2. Install the Woodruff key ④ onto the drive shaft keyway, and then install the impeller ⑤.

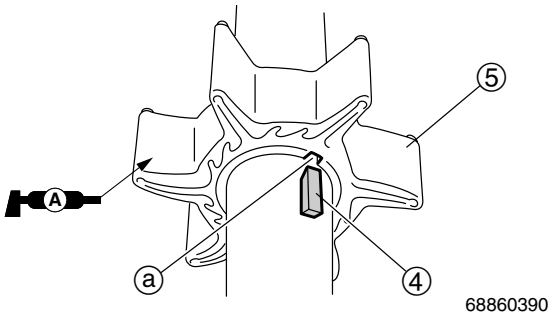

NOTE:
Align the groove ⓐ in the impeller ⑤ with the Woodruff key ④.

3. Install the washers ⑥, wave washer ⑦, spacer ⑧ and collar ⑨ onto the drive shaft.

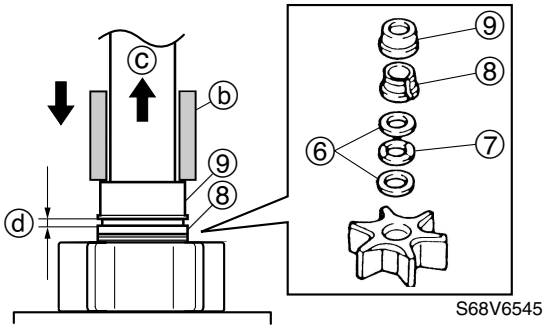

NOTE:
Press the collar with an appropriate tool ⓑ while pulling up ⓒ the drive shaft until the clearance ⓓ between the collar ⑨ and spacer ⑧ is 2 mm (0.08 in).

4. Install the new O-ring ⑩ and insert cartridge ⑪ into the water pump housing ⑫.

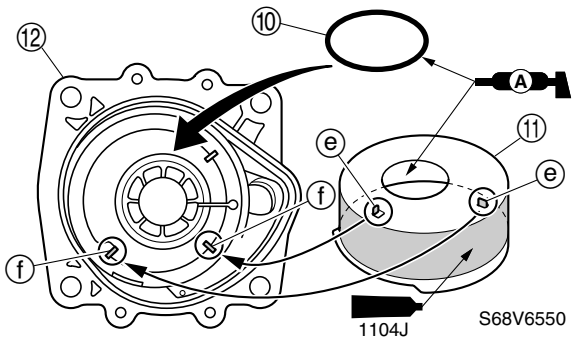

NOTE:
Align the insert cartridge projections ⓔ with the holes ⓕ in the water pump housing.

5. Install the new O-ring ⑬ and water pump housing assembly ⑭ into the lower unit, and then tighten the bolts ⑮. Then install the seal ⑯ and cover ⑰.

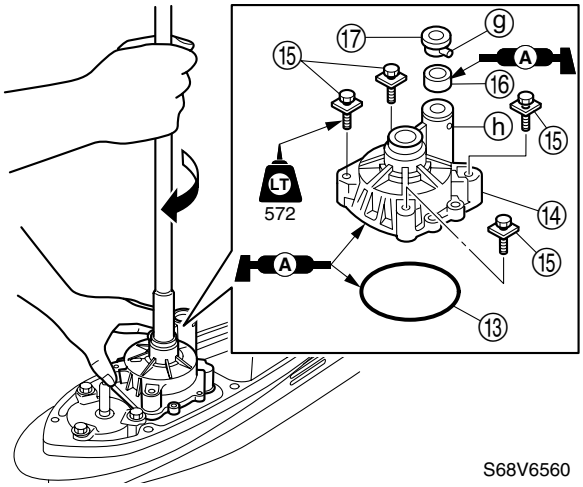

CAUTION:
Do not turn the drive shaft counterclockwise, otherwise the water pump impeller may be damaged.

NOTE:
- When installing the water pump housing, apply grease to the inside of the insert cartridge, and then turn the drive shaft clockwise while pushing down on the water pump housing.
- Align the cover projection ⓖ with the hole ⓗ in the water pump housing.

6. Check the lower unit for air leakage.

NOTE:
To check the lower unit for air leakage, see “Checking the lower unit for air leakage” (3-15).

6

Installing the lower unit

WARNING

When installing the lower unit with the power unit installed, be sure to suspend the outboard motor. Otherwise, the outboard motor could suddenly fall and result in severe injury.

1. Set the gear shift to the “N” position at the lower unit.

	Shift rod push arm: 90890-06052

2. Align the alignment mark ⓐ on the bushing with the alignment mark ⓑ on the bracket at the power unit side.

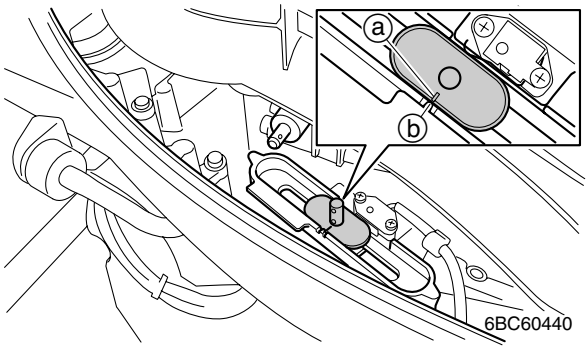

3. Install the dowels ① into the lower unit.

4. Install the lower unit to the upper case, and then tighten the lower unit mounting bolts ② and ③ to the specified torque.

NOTE:
Connect the speedometer hose ④.

5. Install the trim tab ⑤ to the original position, and then tighten the trim tab bolt ⑥ to the specified torque.

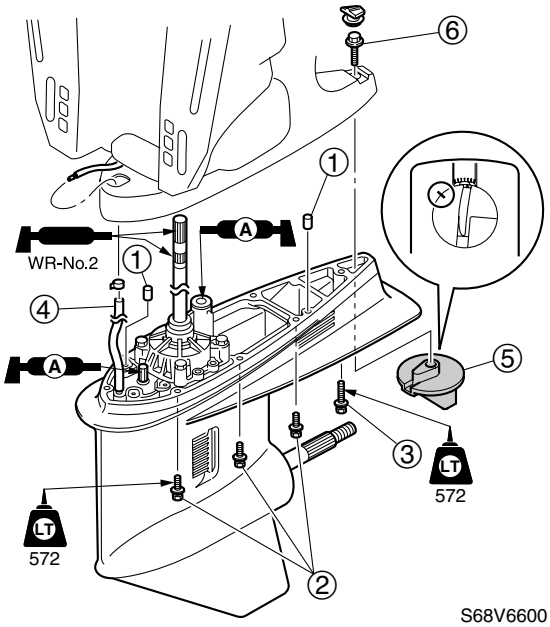

	Lower unit mounting bolt ②, ③: 39 N·m (3.9 kgf·m, 28.8 ft·lb) Trim tab bolt ⑥: 42 N·m (4.2 kgf·m, 31.0 ft·lb)

6. Fill the lower unit with gear oil to the correct level.

	Recommended gear oil: Hypoid gear oil API: GL-4 SAE: 90 Gear oil quantity: 760 cm^3 (25.7 US oz, 26.8 Imp oz)

7. Install the propeller ⑦ and propeller nut ⑧. Place a block of wood between the anti-cavitation plate and propeller to keep the propeller from turning, and then tighten the propeller nut to the specified torque.

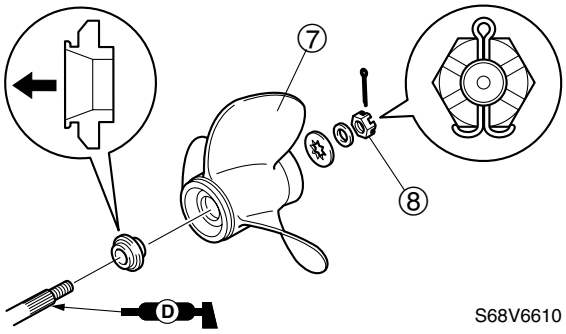

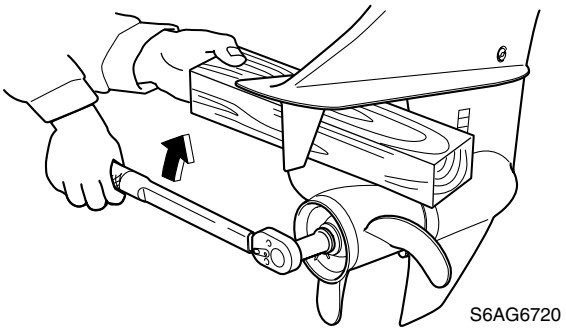

⚠WARNING

- **Do not hold the propeller with your hands when loosening or tightening it.**
- **Be sure to disconnect the battery cables from the battery and remove the clip from the engine stop lanyard switch.**

NOTE:

If the grooves in the propeller nut ⑧ do not align with the cotter pin hole, tighten the propeller nut until they are aligned.

	Propeller nut ⑧: 54 N·m (5.4 kgf·m, 39.8 ft·lb)

6

Shimming

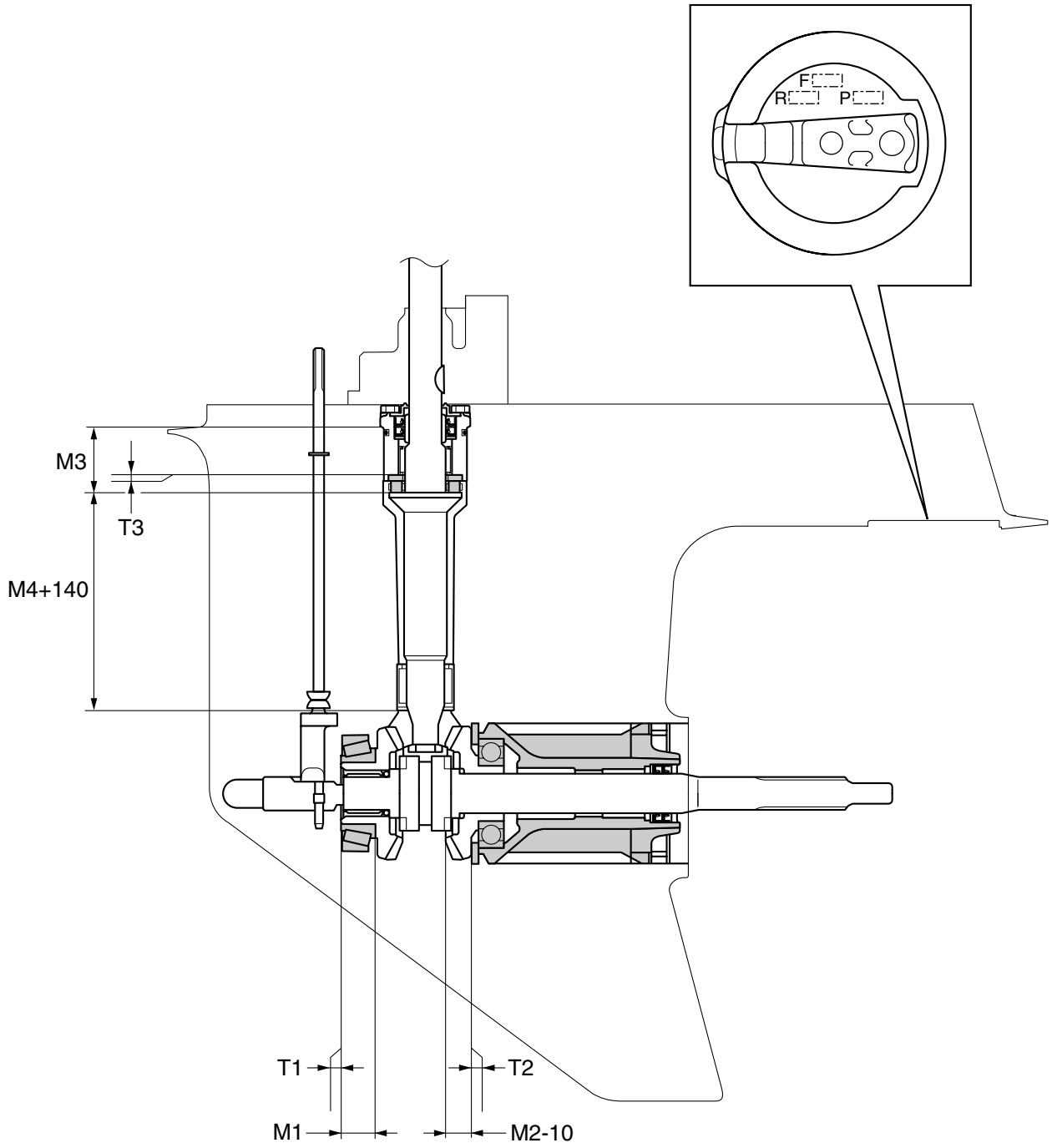

6BC60290

Shimming

NOTE:
- Shimming is not required when assembling the original lower case and inner parts.
- Shimming is required when assembling the original inner parts and new lower case.
- Shimming is required when assembling the new inner part(s) and original lower case.

Selecting the pinion shim

1. Install the pinion and pinion nut onto the drive shaft, and then tighten the pinion nut to the specified torque.

	Pinion nut: 93 N·m (9.3 kgf·m, 68.6 ft·lb)

2. Hold the special service tool ① in a vise, and then install the drive shaft ② into the special service tool so that the shaft is at the center of the hole.

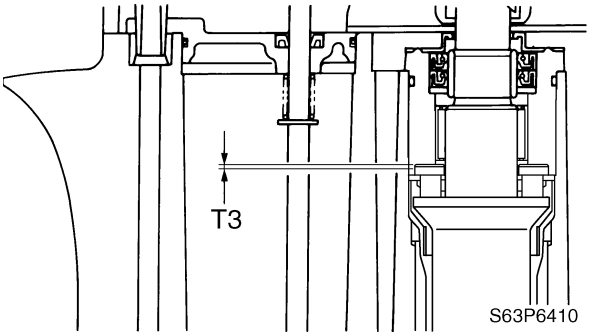

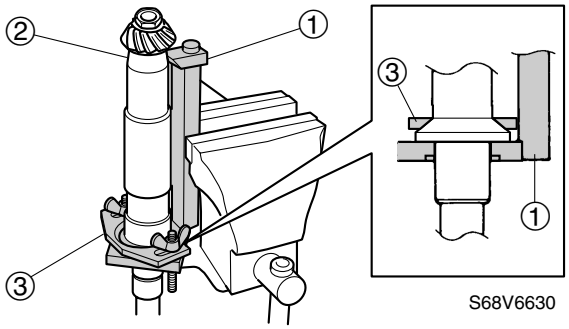

NOTE:
- Make sure that the special service tool and drive shaft are parallel.
- Tighten the wing nuts another 1/4 of a turn after they contact the plate ③.
- Select the shim thickness (T3) by using the specified measurement(s) and the calculation formula.

	Pinion height gauge ①: 90890-06710

3. Measure the distance (M4) between the special service tool and the pinion as shown.

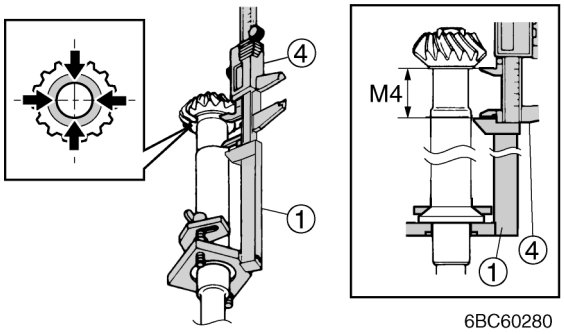

NOTE:
- Measure the pinion at 4 points to find the distance average.
- Make a note of each measurement numeral.

	Digital caliper ④: 90890-06704

4. Install the thrust bearing ⑤ onto the drive shaft housing ⑥, and then turn the thrust bearing 2 or 3 times to seat the drive shaft housing.

5. Measure the drive shaft housing height (M3) as shown.

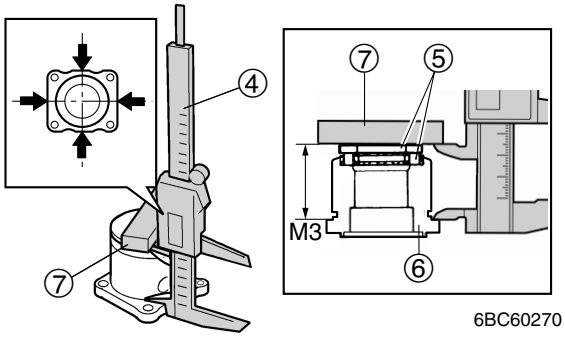

NOTE:
- Measure the thrust bearing at 4 points to find the height average.
- Make a note of each measurement numeral.

Digital caliper ④: 90890-06704
Shimming plate ⑦: 90890-06701

6. Calculate the pinion shim thickness (T3) as shown in the examples below.

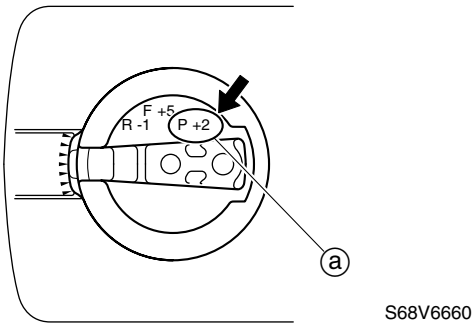

NOTE:
"P" is the deviation of the lower case dimension from standard. The "P" mark ⓐ is stamped on the trim tab mounting surface of the lower case in 0.01 mm units. If the "P" mark is unreadable, assume that "P" is zero and measure the backlash when the unit is assembled.

Calculation formula:
Pinion shim thickness (T3) =
62.50 + P/100 – M3 – M4

Example:
If "M3" is 46.85 mm, "M4" is 15.12 mm, and "P" is (+2), then
T3 = 62.50 + (+2)/100 – 46.85 – 15.12 mm
= 62.50 + 0.02 – 46.85 – 15.12 mm
= 0.55 mm
If "M3" is 46.70 mm, "M4" is 15.10 mm, and "P" is (–3), then
T3 = 62.50 + (–3)/100 – 46.70 – 15.10 mm
= 62.50 – 0.03 – 46.70 – 15.10 mm
= 0.67 mm

7. Select the pinion shim(s) (T3) as follows.

Calculated number at 1/100 place	Rounded number
1, 2	0
3, 4, 5	2
6, 7, 8	5
9, 10	8

Available shim thicknesses:
0.10, 0.12, 0.15, 0.18, 0.30, 0.40 and 0.50 mm

Example:
If "T3" is 0.55 mm, then the pinion shim thickness is 0.52 mm.
If "T3" is 0.67 mm, then the pinion shim thickness is 0.65 mm.

Selecting the forward gear shim

1. Turn the taper roller bearing outer race ① 2 or 3 times to seat the rollers.
2. Measure the bearing height (M1) as shown.

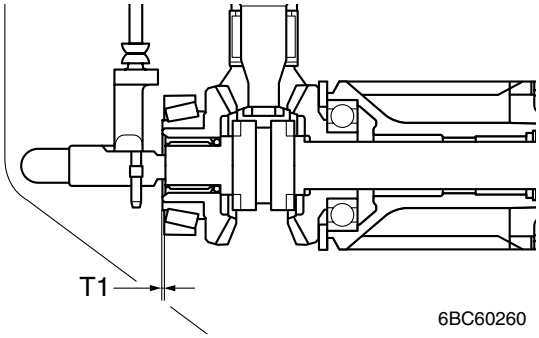

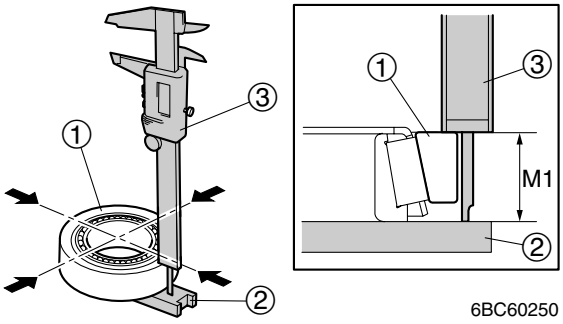

NOTE:
- Select the shim thickness (T1) by using the specified measurement(s) and the calculation formula.
- Measure the taper roller bearing outer race at 4 points to find the height average.
- Make a note of each measurement numeral.

	Shimming plate ②: 90890-06701 Digital caliper ③: 90890-06704

3. Calculate the forward gear shim thickness (T1) as shown in the examples below.

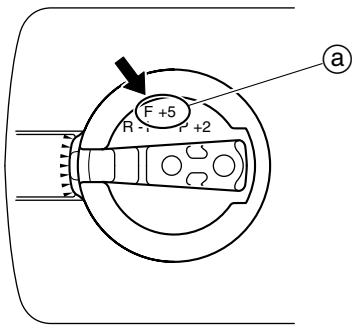

NOTE:
"F" is the deviation of the lower case dimension from standard. The "F" mark ⓐ is stamped on the trim tab mounting surface of the lower case in 0.01 mm units. If the "F" mark is unreadable, assume that "F" is zero and measure the backlash when the unit is assembled.

> Calculation formula:
> Forward gear shim thickness (T1) = 24.60 + F/100 – M1

Example:
If "M1" is 24.10 mm and "F" is (+5), then
T1 = 24.60 + (+5)/100 – 24.10 mm
= 24.60 + 0.05 – 24.10 mm
= 0.55 mm
If "M1" is 24.10 mm and "F" is (0), then
T1 = 24.60 + (0)/100 – 24.10 mm
= 24.60 + 0 – 24.10 mm
= 0.50 mm

4. Select the forward gear shim(s) (T1) as follows.

Calculated number at 1/100 place	Rounded number
1, 2	0
3, 4, 5	2
6, 7, 8	5
9, 10	8

> Available shim thicknesses:
> 0.10, 0.12, 0.15, 0.18, 0.30, 0.40 and 0.50 mm

Example:
If "T1" is 0.55 mm, then the forward gear shim thickness is 0.52 mm.
If "T1" is 0.50 mm, then the forward gear shim thickness is 0.48 mm.

Selecting the reverse gear shim

1. Install the ball bearing, thrust washer and reverse gear onto the propeller shaft housing.

2. Measure the gear height (M2) from the thrust washer on the propeller shaft housing.

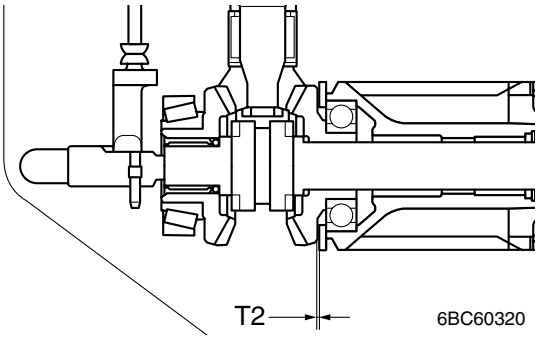

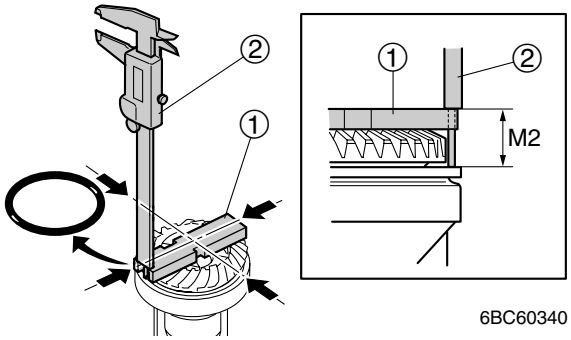

NOTE:

- Measure the reverse gear height without the O-ring.
- Select the shim thickness (T2) by using the specified measurement(s) and the calculation formula.
- Measure the reverse gear at 4 points to find the height average.
- Make a note of each measurement numeral.

	Shimming plate ①: 90890-06701 Digital caliper ②: 90890-06704

3. Calculate the reverse gear shim thickness (T2) as shown in the examples below.

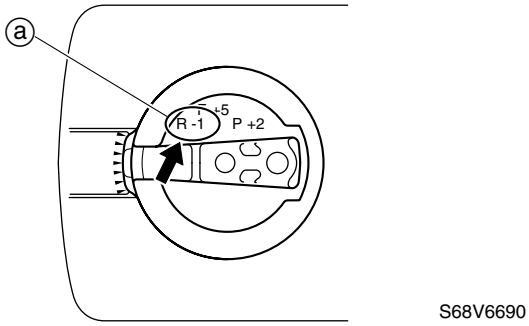

NOTE:

"R" is the deviation of the lower case dimension from standard. The "R" mark ⓐ is stamped on the trim tab mounting surface of the lower case in 0.01 mm units. If the "R" mark is unreadable, assume that "R" is zero and measure the backlash when the unit is assembled.

Calculation formula:
Reverse gear shim thickness (T2) =
M2 – 27.40 – R/100

Example:
If "M2" is 27.95 mm and "R" is (–1), then
T2 = 27.95 – 27.40 – (–1)/100 mm
= 27.95 – 27.40 + 0.01 mm
= 0.56 mm
If "M2" is 27.95 mm and "R" is (+3), then
T2 = 27.95 – 27.40 – (+3)/100 mm
= 27.95 – 27.40 – 0.03 mm
= 0.52 mm

4. Select the reverse gear shim(s) (T2) as follows.

Calculated number at 1/100 place	Rounded number
1, 2	2
3, 4, 5	5
6, 7, 8	8
9, 10	10

Available shim thicknesses:
0.10, 0.12, 0.15, 0.18, 0.30, 0.40 and 0.50 mm

Example:
If “T2” is 0.56 mm, then the reverse gear shim thickness is 0.58 mm.
If “T2” is 0.52 mm, then the reverse gear shim thickness is 0.52 mm.

Backlash

Measuring the forward and reverse gear backlash

1. Install the lower unit onto a repair stand.
2. Remove the water pump assembly.
3. Set the gear shift to the “N” position at the lower unit.

Shift rod push arm: 90890-06052

4. Turn the lower unit so that the propeller shaft is facing down.
5. Install the special service tools.
6. Tighten the center bolt ① to the specified torque while turning the drive shaft.

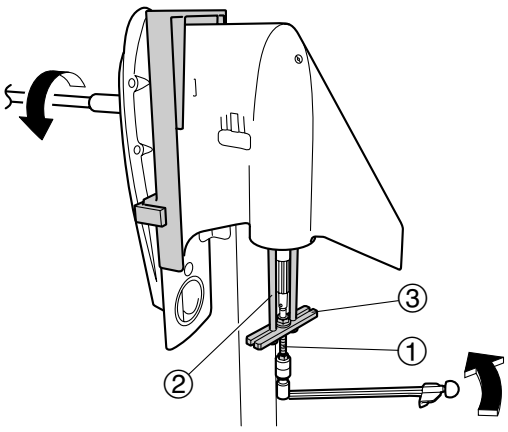

6BC60350

NOTE:
- Turn the propeller shaft 2 or 3 times to seat the taper roller bearing, before tightening the center bolt to the specified torque.
- The drive shaft can no longer be turned when the center bolt is tightened to the specified torque.

Center bolt ①: 90890-06504
Bearing housing puller claw L ②: 90890-06502
Stopper guide plate ③: 90890-06501

Center bolt ①:
5 N·m (0.5 kgf·m, 3.7 ft·lb)

7. Turn the lower unit upside down.

8. Install the backlash indicator onto the drive shaft (22.4 mm [0.88 in] in diameter), and then install the dial gauge.

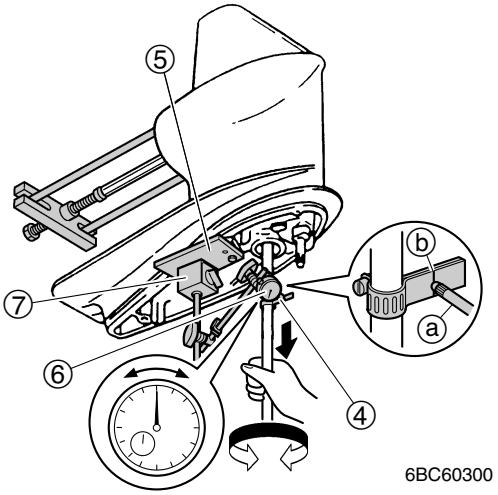

NOTE:
Install the dial gauge so that the plunger ⓐ contacts the mark ⓑ on the backlash indicator rod.

Backlash indicator ④: 90890-06706
Magnet base plate ⑤: 90890-07003
Dial gauge set ⑥: 90890-01252
Magnet base B ⑦: 90890-06844

9. While pulling down the drive shaft, turn it slowly clockwise and counterclockwise and measure the backlash when the drive shaft stops in each direction.

NOTE:
Measure the backlash at 4 points to find the average.

Forward gear backlash:
0.18–0.54 mm (0.0071–0.0213 in)

10. Adjust the current shim thickness if the forward gear backlash is out of specification.

Forward gear backlash	Shim thickness
Less than 0.18 mm (0.0071 in)	To be decreased by (0.36 – M) × 0.58
More than 0.54 mm (0.0213 in)	To be increased by (M – 0.36) × 0.58

M: Measurement

Available shim thicknesses:
0.10, 0.12, 0.15, 0.18, 0.30, 0.40 and 0.50 mm

11. Remove the special service tools from the propeller shaft.

12. Install the propeller ⑧, spacer ⑨, washer ⑩ and propeller nut ⑪ without installing the spacer ⑫.

13. Tighten the propeller nut to the specified torque while turning the drive shaft.

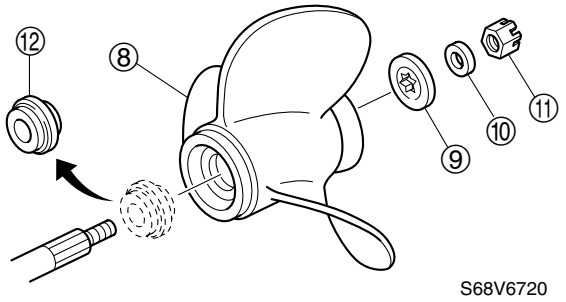

NOTE:
The drive shaft can no longer be turned when the propeller nut is tightened to specified torque.

Propeller nut ⑪:
5 N·m (0.5 kgf·m, 3.7 ft·lb)

14. While pulling down the drive shaft, turn it slowly clockwise and counterclockwise and measure the backlash when the drive shaft stops in each direction.

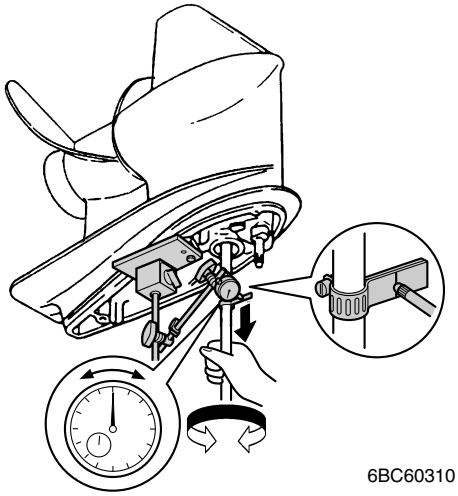

NOTE:
Measure the backlash at 4 points to find the average.

Reverse gear backlash:
0.86–1.26 mm (0.0339–0.0496 in)

15. Adjust the current shim thickness if the reverse gear backlash is out of specification.

Reverse gear backlash	Shim thickness
Less than 0.86 mm (0.0339 in)	To be increased by (1.06 – M) × 0.58
More than 1.26 mm (0.0496 in)	To be decreased by (M – 1.06) × 0.58

M: Measurement

Available shim thicknesses:
0.10, 0.12, 0.15, 0.18, 0.30, 0.40 and 0.50 mm

16. Remove the propeller and special service tools, and then install the water pump assembly.

NOTE:
Install the propeller again with the spacer which was not installed in the step 12.

17. Fill the lower unit with gear oil to the correct level.

— MEMO —

Bracket unit

Tiller handle (tiller handle model) 7-1
Steering friction plate 7-5
Disassembling the tiller handle 7-6
Assembling the tiller handle 7-7
Assembling the steering friction plate 7-10

Bottom cowling 7-12
Shift rod 7-15

Upper case and steering arm 7-16
Oil pump 7-21
Removing the upper case 7-22
Disassembling the oil pump 7-22
Checking the oil pump 7-22
Assembling the oil pump 7-22
Disassembling the upper case 7-23
Checking the drive shaft bushing 7-24
Disassembling the oil pan and exhaust manifold 7-24
Checking the oil pan and exhaust manifold 7-25
Checking the oil strainer 7-25
Assembling the oil pan and exhaust manifold 7-25
Assembling the upper case 7-26
Installing the upper case 7-27
Removing the steering arm 7-29
Installing the steering arm 7-29

Clamp bracket and swivel bracket 7-31
Removing the hydro tilt assembly 7-34
Removing the clamp bracket 7-35
Installing the clamp bracket 7-35
Installing the hydro tilt assembly 7-37

Tiller handle (tiller handle model)

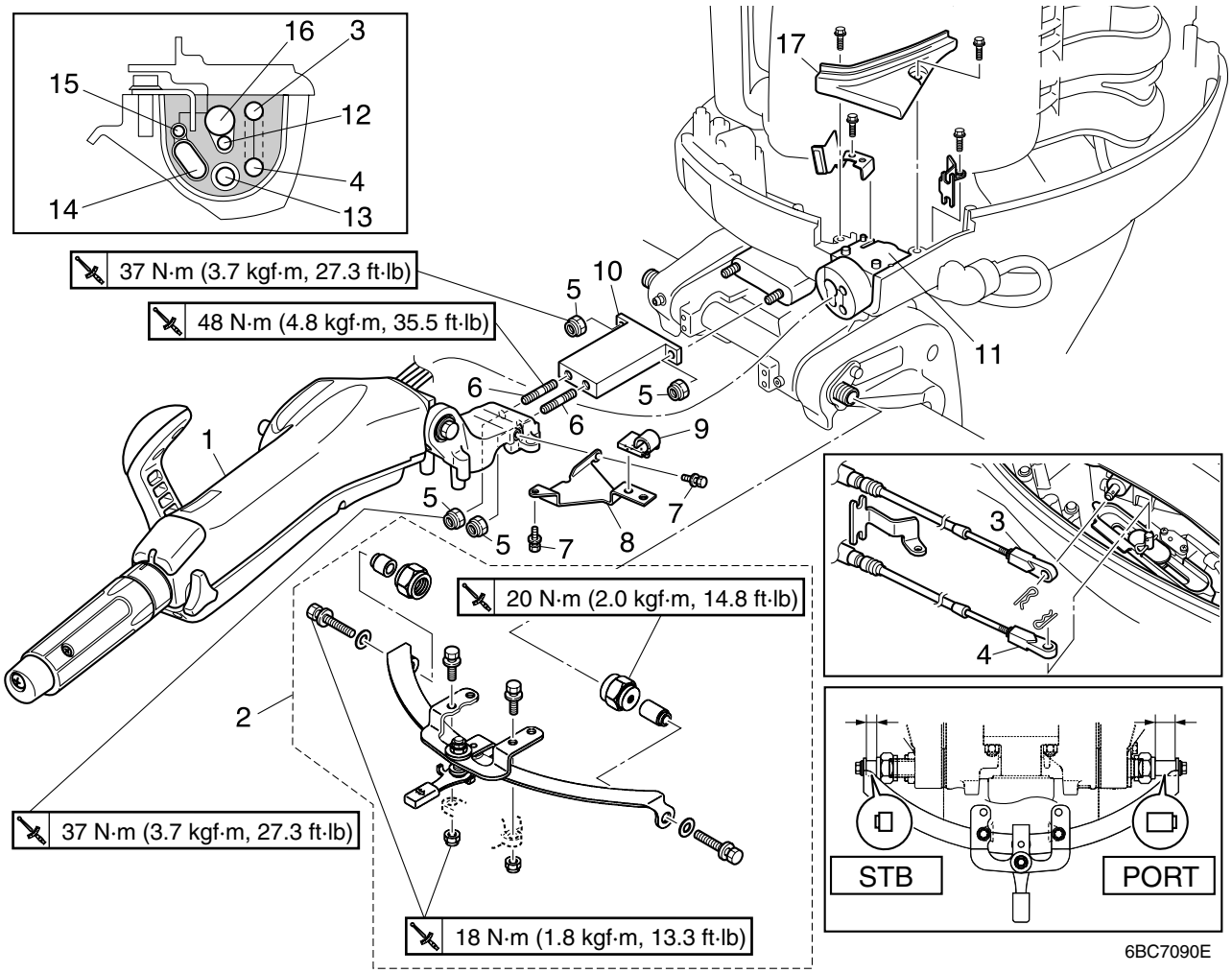

No.	Part name	Q'ty	Remarks
1	Tiller handle assembly	1	
2	Steering friction plate assembly	1	
3	Throttle cable	1	
4	Shift cable	1	
5	Self-locking nut	4	
6	Stud bolt	2	
7	Bolt	2	M6 × 16 mm
8	Bracket	1	
9	Hose holder	1	
10	Bracket	1	
11	Grommet	1	
12	Warning indicator lead	1	
13	Fuel hose	1	
14	Battery cable	1	
15	Speedometer hose	1	
16	10-pin main harness	1	
17	Retaining plate	1	

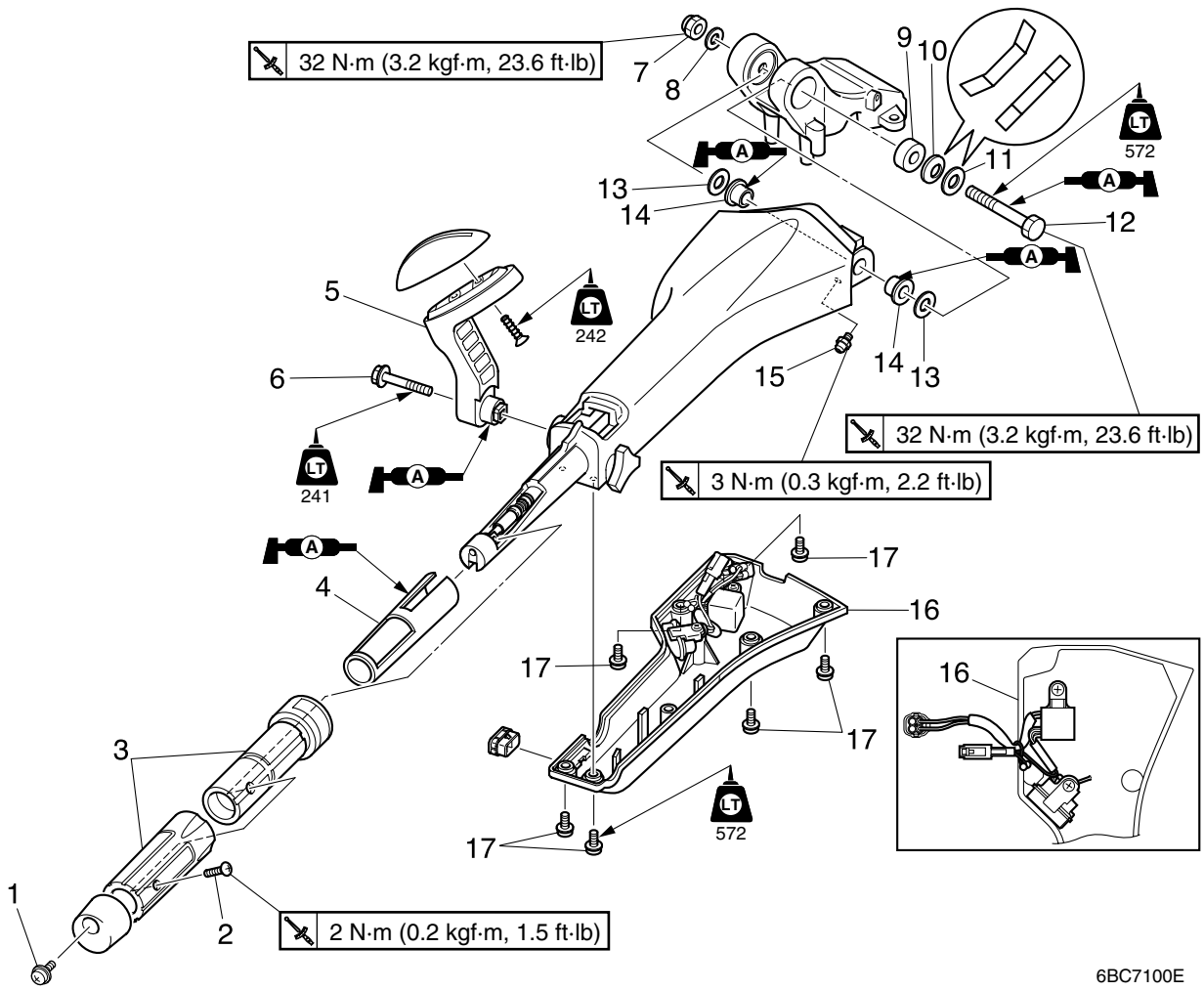

No.	Part name	Q'ty	Remarks
1	Screw	1	ø6 × 16 mm
2	Screw	1	ø5 × 22 mm
3	Throttle grip	1	
4	Bushing	1	
5	Shift lever	1	
6	Bolt	1	M8 × 40 mm
7	Nut	1	
8	Washer	1	
9	Collar	1	
10	Wave washer	1	
11	Washer	1	
12	Bolt	1	M12 × 80 mm
13	Washer	2	
14	Bushing	2	
15	Grease nipple	1	
16	Handle cover	1	
17	Screw	6	ø6 × 16 mm

Bracket unit

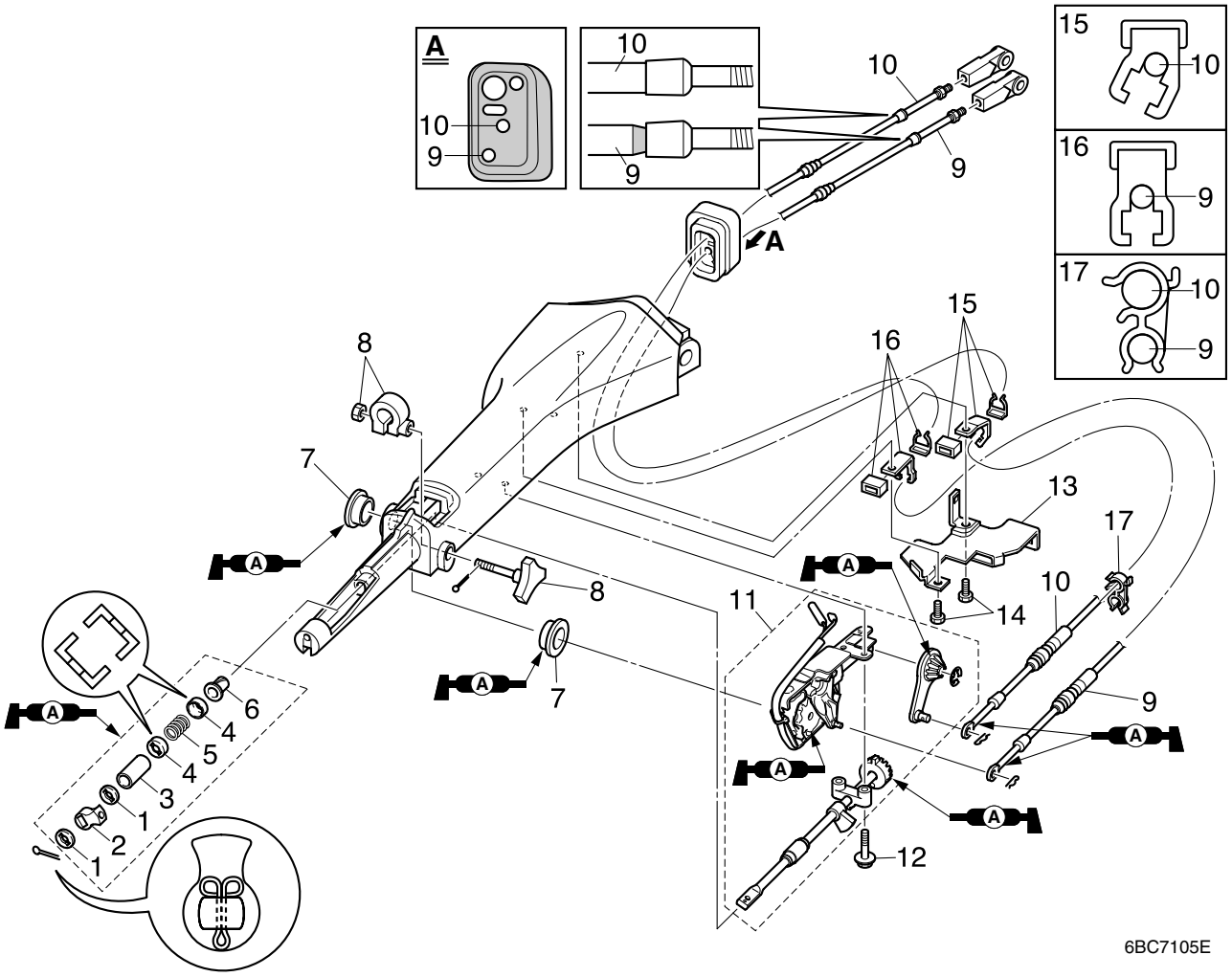

No.	Part name	Q'ty	Remarks
1	Washer	2	
2	Plate	1	
3	Collar	1	
4	Retainer	2	
5	Spring	1	
6	Bushing	1	
7	Bushing	2	
8	Throttle friction adjuster	1	
9	Shift cable	1	
10	Throttle cable	1	
11	Throttle/shift link assembly	1	
12	Bolt	2	M6 × 14 mm
13	Bracket	1	
14	Bolt	2	M6 × 30 mm
15	Holder	1	Throttle cable
16	Holder	1	Shift cable
17	Clamp	1	

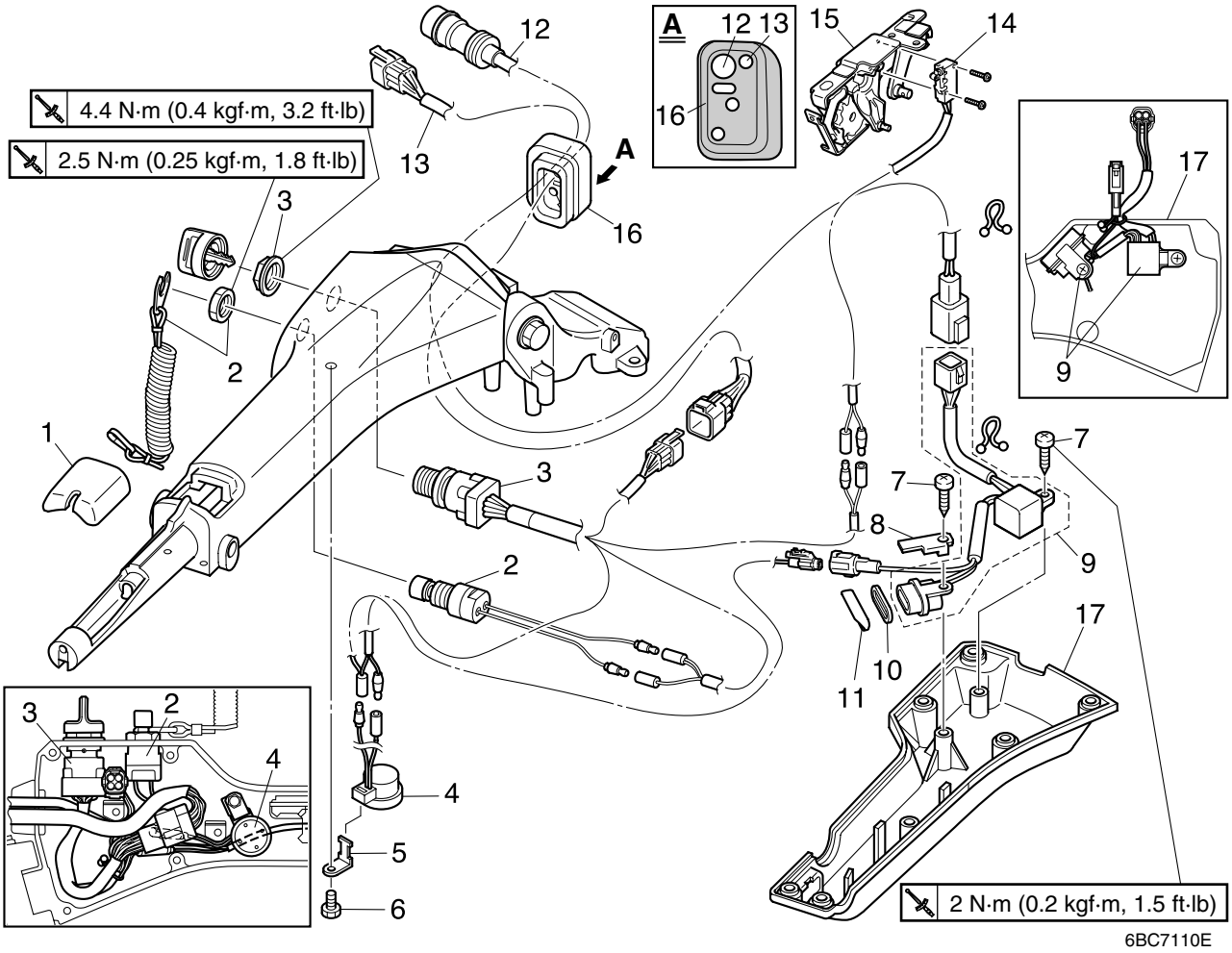

No.	Part name	Q'ty	Remarks
1	Cover	1	
2	Engine stop lanyard switch	1	
3	Engine start switch	1	
4	Buzzer	1	
5	Bracket	1	
6	Bolt	1	M6 × 14 mm
7	Screw	2	ø6 × 20 mm
8	Bracket	1	
9	Warning indicator assembly	1	
10	Gasket	1	
11	Grommet	1	
12	10-pin main harness	1	
13	Warning indicator lead	1	
14	Neutral switch	1	
15	Throttle/shift link assembly	1	
16	Grommet	1	
17	Handle cover	1	

Steering friction plate

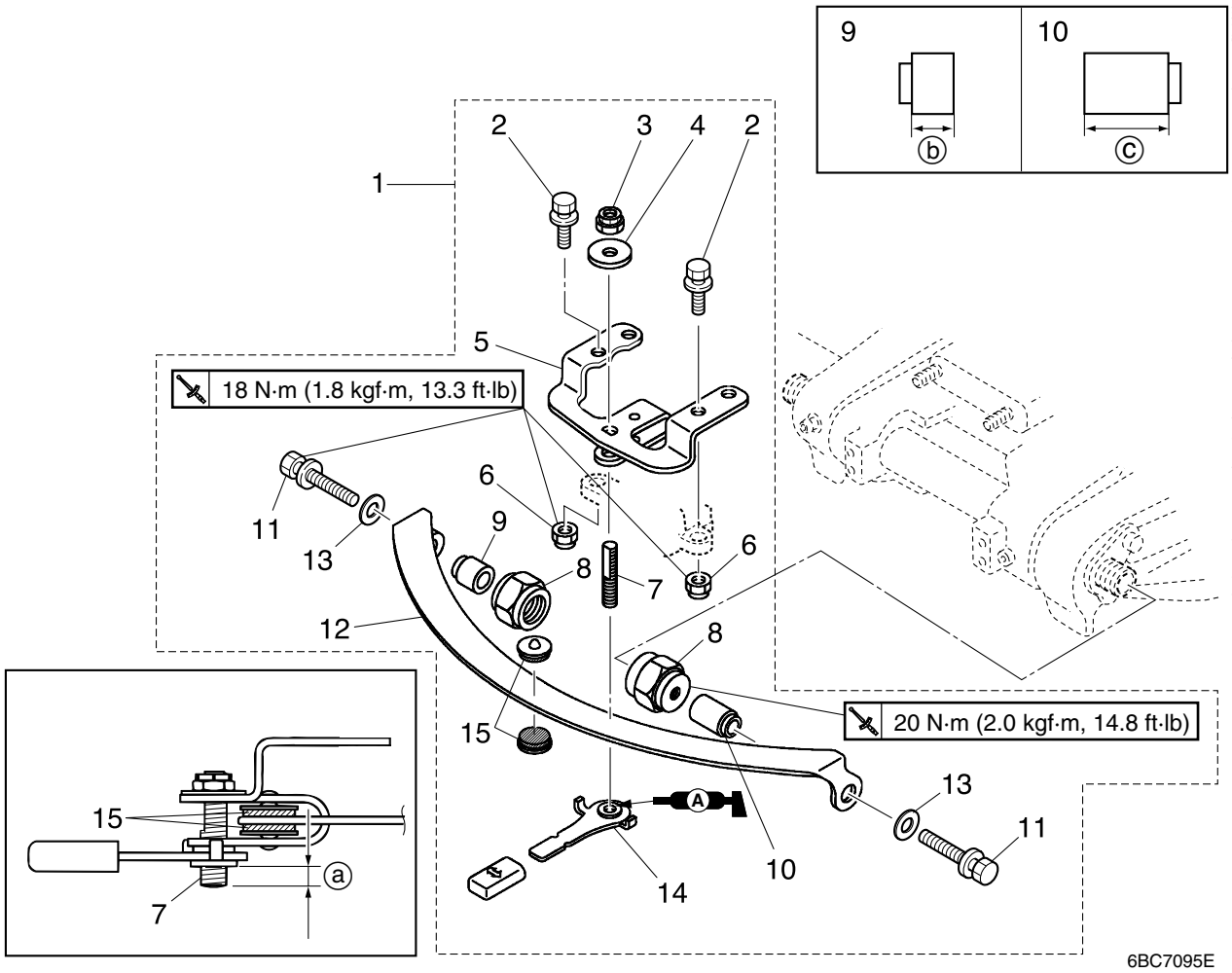

No.	Part name	Q'ty	Remarks
1	Steering friction plate assembly	1	
2	Bolt	2	M8 × 25 mm
3	Friction adjusting nut	1	
4	Washer	1	
5	Bracket	1	
6	Self-locking nut	2	
7	Steering lock shaft	1	ⓐ: 8 mm (0.35 in)
8	Nut	2	
9	Collar	1	Length ⓑ: 16.0 mm (0.6 in)
10	Collar	1	Length ⓒ: 28.5 mm (1.12 in)
11	Bolt	2	M8 × 50 mm
12	Steering friction plate	1	
13	Washer	2	
14	Steering lock lever	1	
15	Steering friction piece	2	

Disassembling the tiller handle

NOTE:
- See the exploded diagrams (7-1 to 7-4).
- To check the electrical components in the tiller handle, refer to the applicable checking procedure in chapter 8.

1. Set the throttle grip to the fully-closed position, and then set the shift lever to the "N" position.

2. Disconnect the throttle cable, shift cable, 10-pin main harness coupler and warning indicator coupler from the power unit side.

NOTE:
To disconnect the wiring harness and cables, see "Removing the power unit" (5-19).

3. Remove the steering friction plate assembly ①, and then remove the tiller handle assembly ② from the swivel bracket.

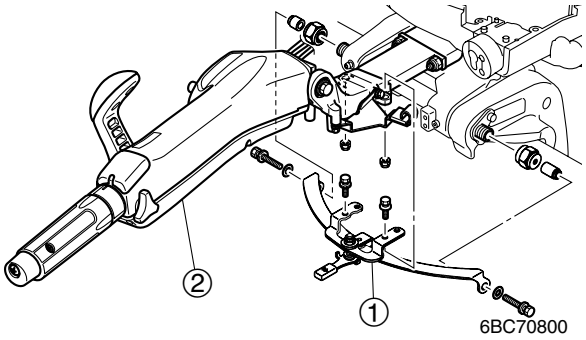

4. Remove the handle cover ③, and then disconnect the warning indicator couplers ④ and ⑤.

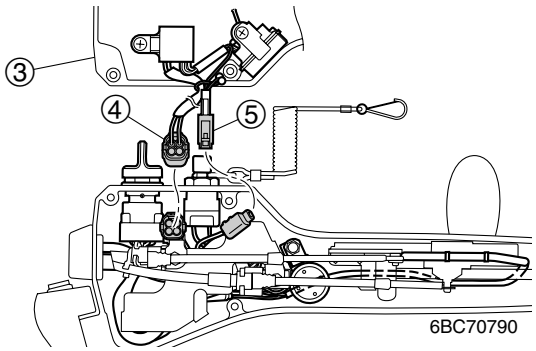

5. Remove the clips ⑥, and then remove the cable clamps ⑦, shift cable ⑧ and throttle cable ⑨.

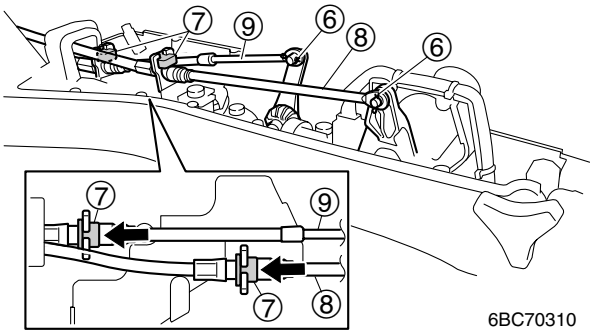

NOTE:
To remove the cable clamps ⑦, push them in the direction shown.

6. Remove the bracket ⑩, cable holders ⑪, buzzer ⑫, and then disconnect the neutral switch connectors ⑬.

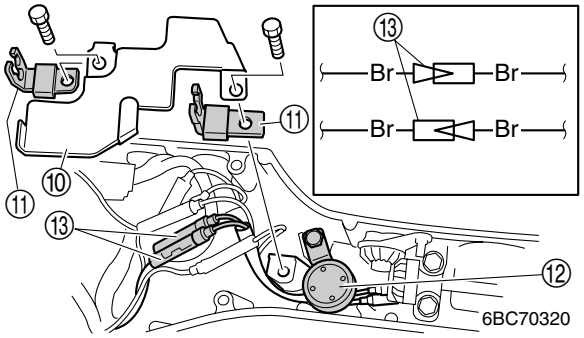

7. Remove the cap ⑭, throttle grip ⑮ and shift lever ⑯.

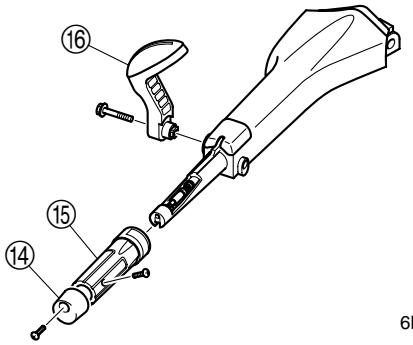

7

8. Remove the cotter pin ⑰, throttle friction adjuster ⑱ and throttle shaft bolts ⑲.

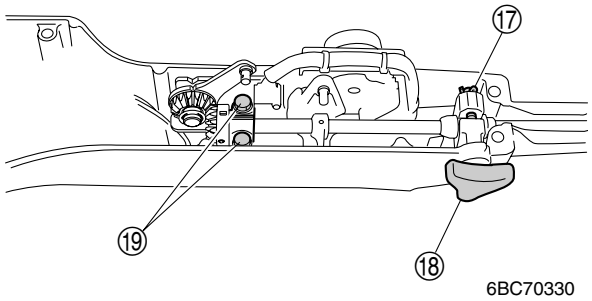

9. Pull up the throttle/shift link assembly ⑳ in the direction shown, and then remove the cotter pin ㉑, washers ㉒, plate ㉓ and collar ㉔ from the throttle shaft ㉕.

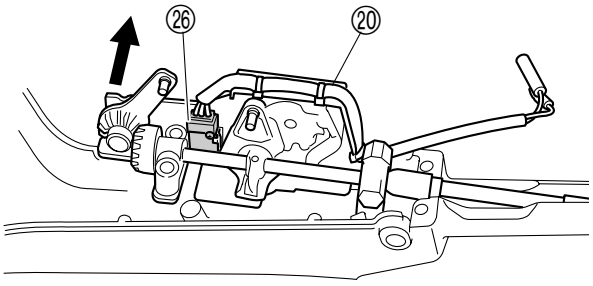

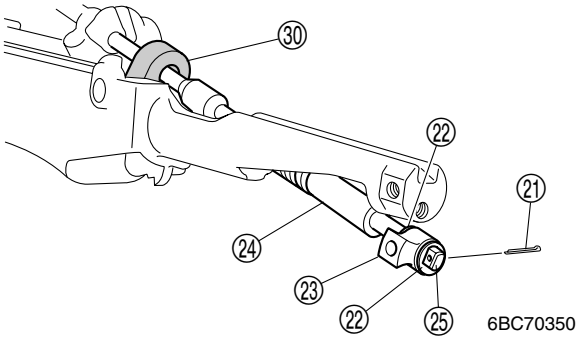

NOTE:
If necessary remove the neutral switch ㉖ from the throttle/shift link assembly ⑳.

10. Remove the retainers ㉗, spring ㉘ and bushing ㉙ from the throttle shaft.

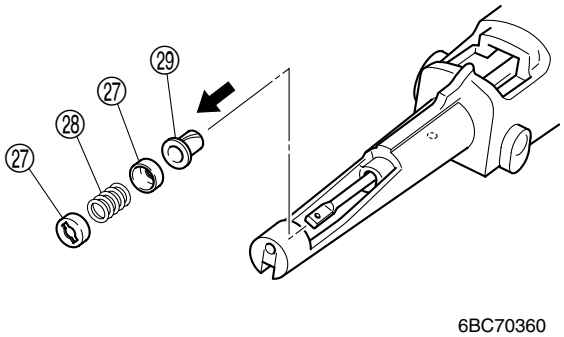

11. Remove the throttle/shift link assembly ⑳ from the tiller handle.

12. Remove the throttle friction adjuster piece ㉚ from the throttle shaft.

Assembling the tiller handle

NOTE:
See the exploded diagrams (7-1 to 7-4).

1. Install the throttle friction adjuster piece to the throttle shaft, and then install the throttle/shift link assembly into the tiller handle.

2. Install the bushing ①, retainers ② and spring ③ onto the throttle shaft.

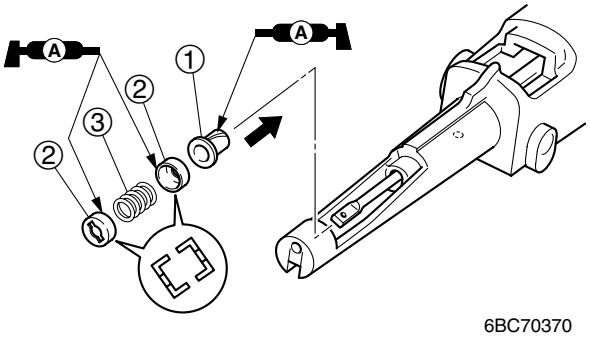

NOTE:
Be sure to install the retainers ② in the direction shown.

3. Install the collar ④, washers ⑤, plate ⑥ and cotter pin ⑦ onto the throttle shaft.

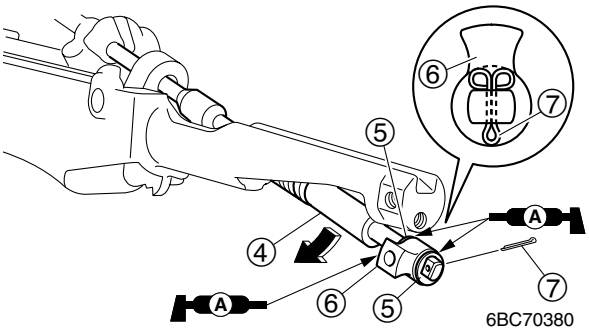

NOTE:
- Pull down the throttle shaft as shown.
- Bend the ends of cotter pin ⑦ as shown.

4. Align the mark ⓐ with ⓑ and cutaway ⓒ with ⓓ, and then install the throttle/shift link assembly ⑧ and throttle shaft ⑨ by tightening the throttle shaft bolts ⑩.

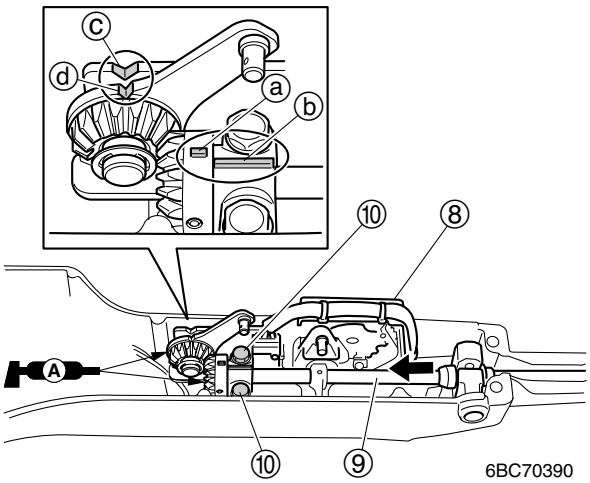

NOTE:
- Install the throttle shaft ⑨ by pushing in the direction shown.
- Be sure not to pinch the neutral switch leads.

5. Install the throttle friction adjuster ⑪ and cotter pin ⑫.

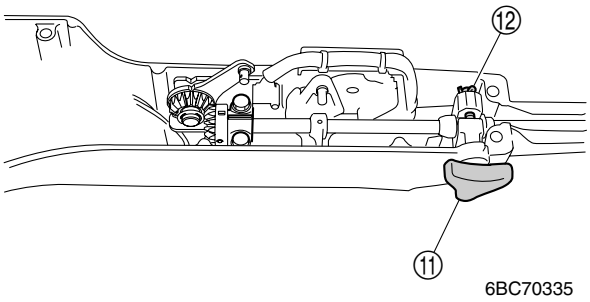

6. Install the throttle grip ⑬, cap ⑭ and shift lever ⑮.

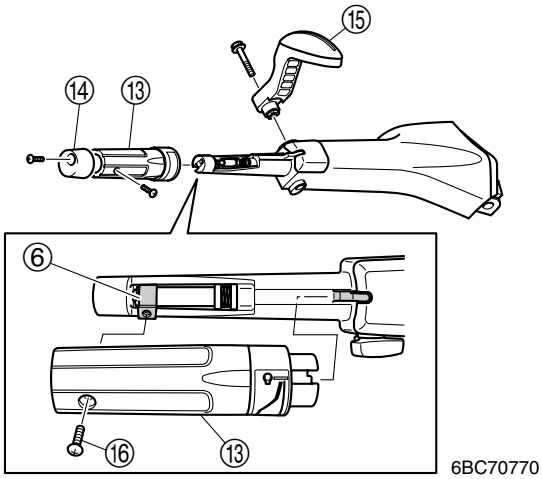

NOTE:
Set the plate ⑥ to the direction shown, and then install the throttle grip ⑬.

	Throttle grip screw ⑯: 2 N·m (0.2 kgf·m, 1.5 ft·lb)

7

7. Set the throttle link lever to the fully-opened position ⓔ, and then to the fully-closed position ⓕ. Then check that the marks ⓐ and ⓑ are aligned, and that the cutaways ⓒ and ⓓ are also aligned.

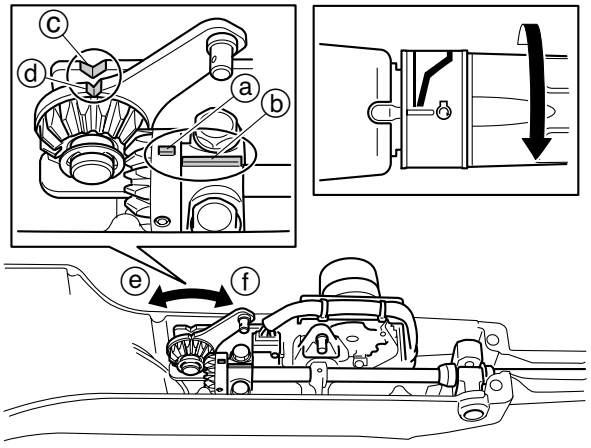

6BC70780

8. Check that the shift link lever operates smoothly when the shift lever is shifted from “N” to “F” or “R” position.

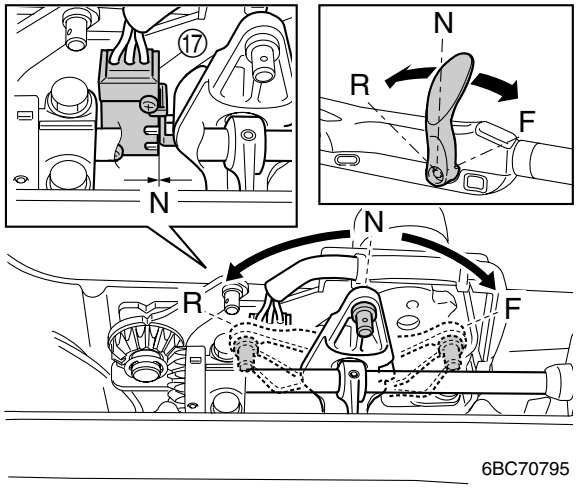

6BC70795

NOTE:
To check the neutral switch ⑰, see “Checking the neutral switch” (8-28).

9. Connect the neutral switch connectors ⑱, and then install the buzzer ⑲.

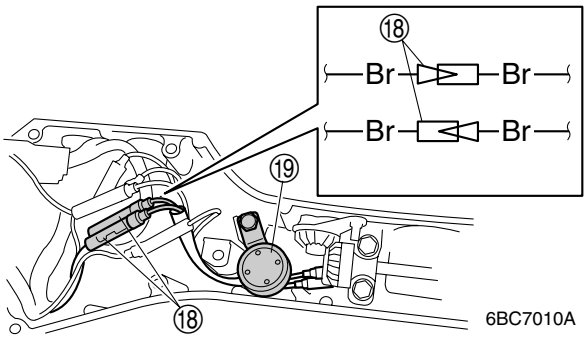

6BC7010A

10. Install the holders ⑳, ㉑ and bracket ㉒.

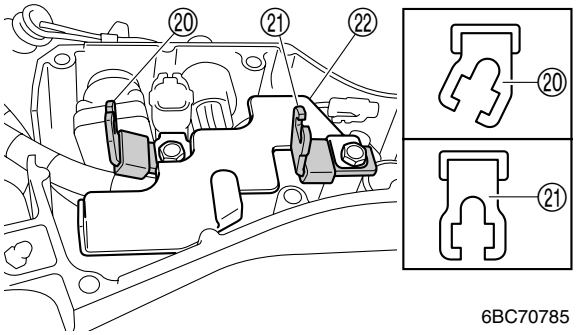

6BC70785

11. Install the throttle cable ㉓, shift cable ㉔, clips ㉕ and cable clamps ㉖.

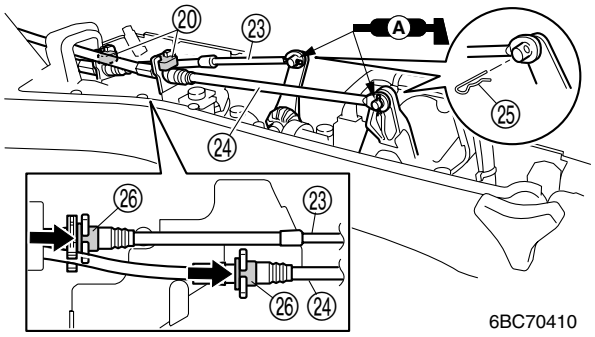

6BC70410

NOTE:
- Install the clips ㉕ as shown.
- To install the cable clamps ㉖, push in the direction shown.

12. Connect the warning indicator couplers ㉗ and ㉘, and then install the handle cover ㉙.

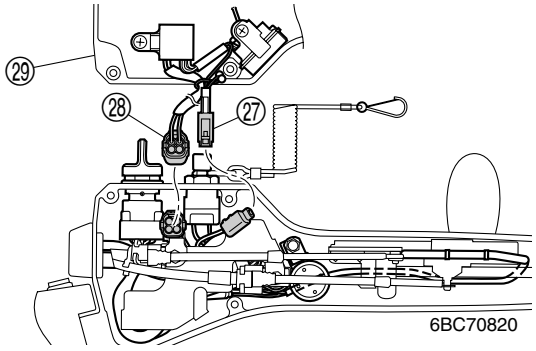

13. Install the tiller handle assembly and steering friction plate assembly onto the swivel bracket.

NOTE:
- To install the tiller handle assembly, wiring harness and cables, see “Setting the tiller handle” (1-17).
- To install and adjust the steering friction plate assembly, see “Assembling the steering friction plate”.

	Tiller handle self-locking nut: 37 N·m (3.7 kgf·m, 27.3 ft·lb)

14. Connect the warning indicator coupler, 10-pin main harness coupler, shift cable and throttle cable to the power unit side.

NOTE:
See “Setting the tiller handle” (1-17).

Assembling the steering friction plate

NOTE:
See the exploded diagrams (7-1 and 7-5).

1. Install the steering friction piece ① onto the bracket ②, and then install the steering friction plate ③.

NOTE:
Put in the projection of the steering friction piece ① to the dent of the bracket ②.

2. Install the steering lock lever ④, steering lock shaft ⑤ and washer ⑥ to the bracket ②, and then tighten the friction adjusting nut ⑦.

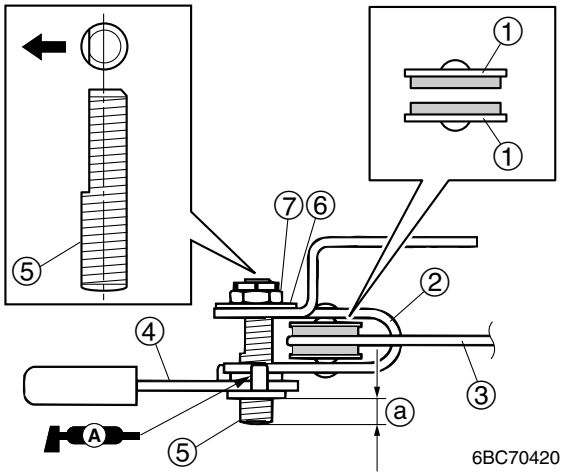

NOTE:
- Screw in the steering lock shaft ⑤ until the length ⓐ is 8 mm (0.31 in).
- Tighten the friction adjusting nut temporary.

3. Install the friction plate nuts ⑧ onto both through tube ends, and then tighten them to the specified torque.

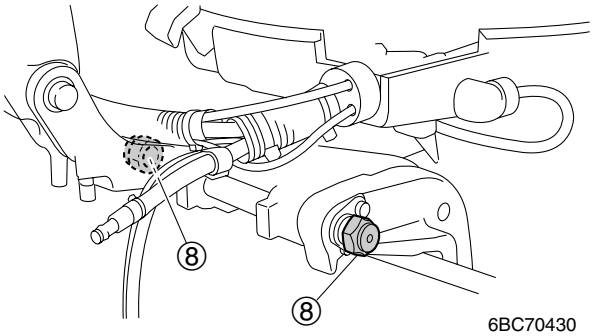

	Friction plate nut ⑧: 20 N·m (2.0 kgf·m, 14.8 ft·lb)

7

4. Install the steering friction plate assembly, collars ⑨, ⑩ and washers ⑪, and then tighten the bolts ⑫, self-locking nuts ⑬ and friction plate bolts ⑭ to the specified torque.

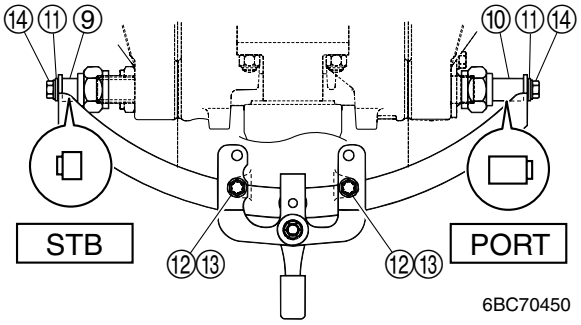

NOTE:
Be sure to install the collars ⑨ and ⑩ in the proper positions shown, as their lengths are different.

Self-locking nut ⑬:
18 N·m (1.8 kgf·m, 13.3 ft·lb)
Friction plate bolt ⑭:
18 N·m (1.8 kgf·m, 13.3 ft·lb)

5. Check and adjust the steering friction plate assembly.

NOTE:
To check and adjust the steering friction plate assembly, see “Checking the steering operation” (1-23) and “Checking the steering system (tiller handle model)” (3-13).

Bottom cowling

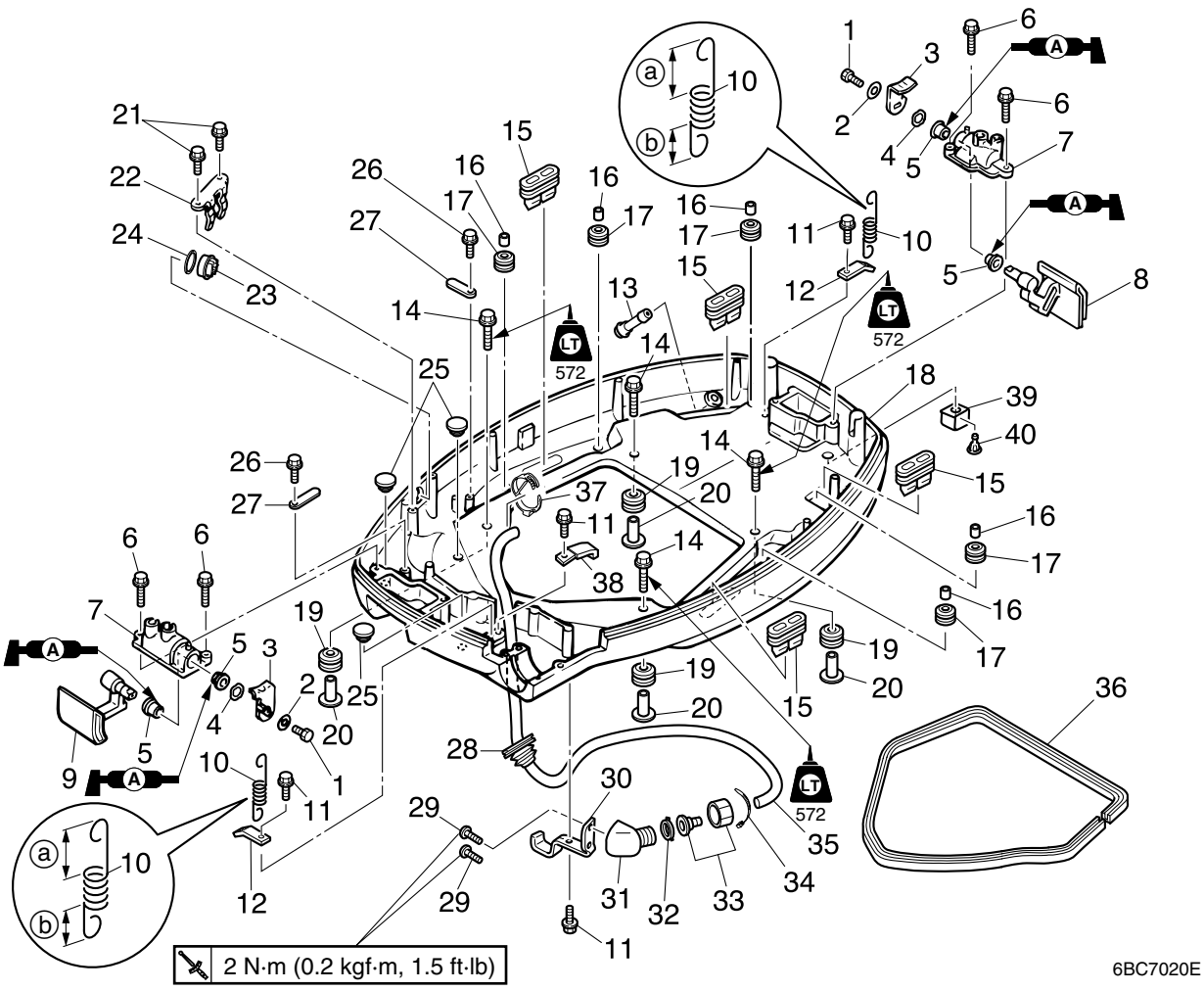

No.	Part name	Q'ty	Remarks
1	Bolt	2	M6 × 16 mm
2	Washer	2	
3	Lever	2	
4	Wave washer	2	
5	Bushing	4	
6	Bolt	4	M6 × 30 mm
7	Plate	2	
8	Lever	1	
9	Lever	1	
10	Spring	2	ⓐ > ⓑ
11	Bolt	4	M6 × 20 mm
12	Hook	2	
13	Cooling water outlet	1	
14	Bolt	4	M8 × 35 mm
15	Grommet	4	
16	Collar	5	
17	Grommet	5	

Bracket unit

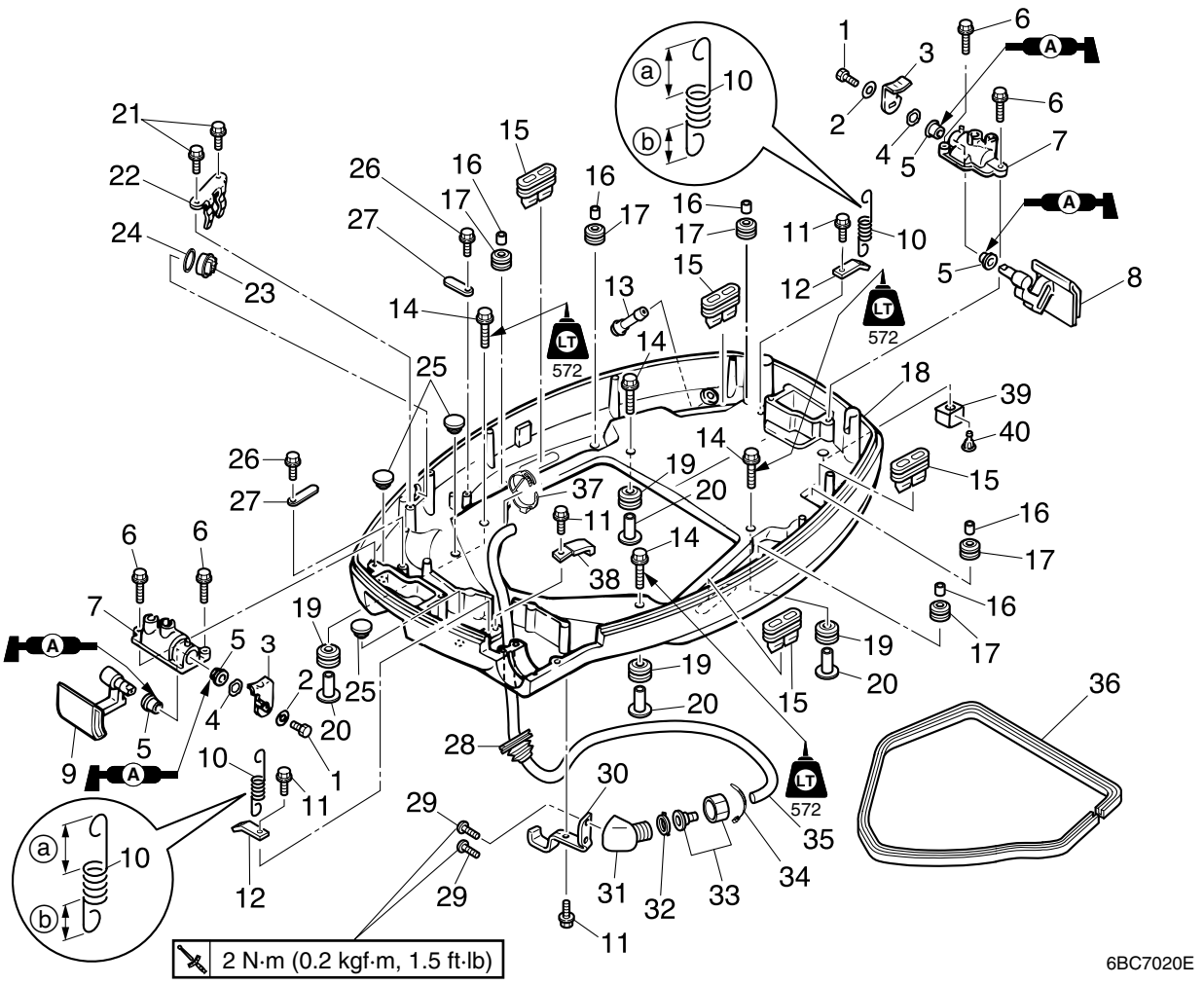

No.	Part name	Q'ty	Remarks
18	Bottom cowling	1	
19	Grommet	4	
20	Collar	4	
21	Bolt	2	M6 × 20 mm
22	Bracket	1	
23	Cover	1	
24	Gasket	1	
25	Grommet	3	
26	Bolt	3	M6 × 25 mm
27	Plate	3	
28	Grommet	1	
29	Screw	2	ø6 × 20 mm
30	Bracket	1	
31	Holder	1	
32	Gasket	1	
33	Flushing hose joint adapter	1	
34	Plastic tie	1	Not reusable

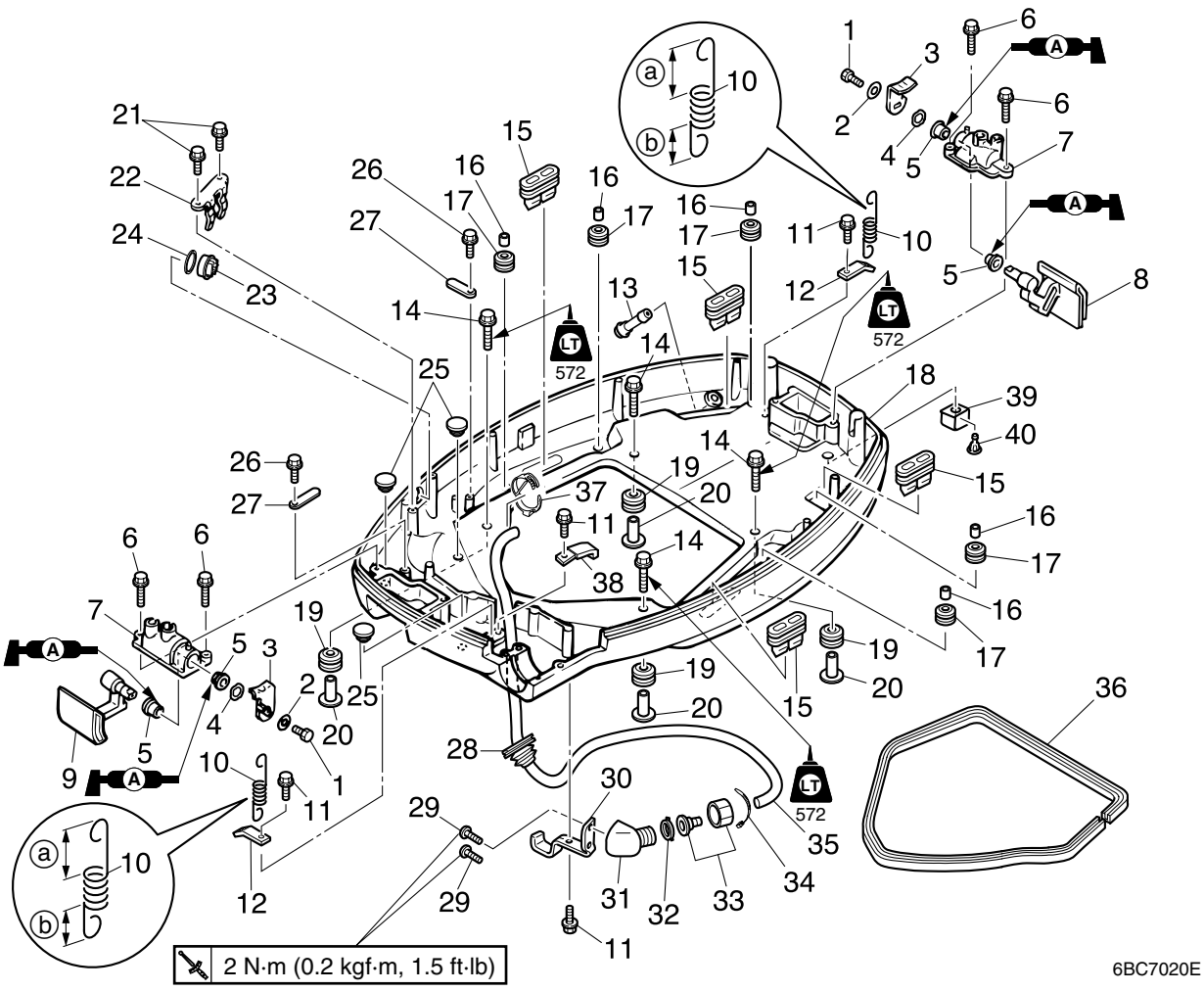

No.	Part name	Q'ty	Remarks
35	Hose	1	
36	Rubber seal	1	
37	Clamp	1	
38	Holder	1	
39	Bracket	1	
40	Canister outlet	1	

Shift rod

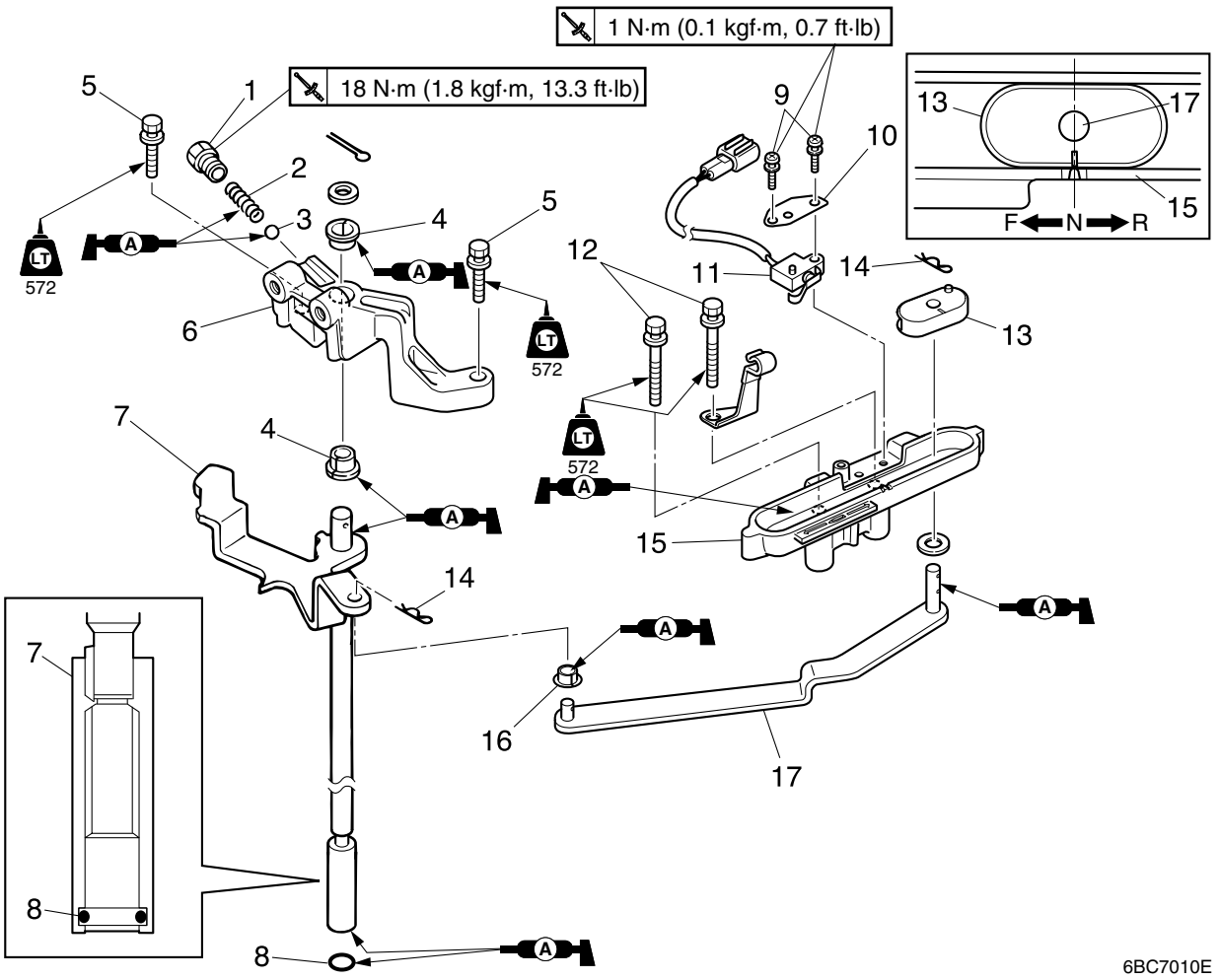

No.	Part name	Q'ty	Remarks
1	Shift rod detent bolt	1	
2	Spring	1	
3	Ball	1	
4	Bushing	2	
5	Bolt	2	M6 × 25 mm
6	Bracket	1	
7	Shift rod	1	L-transom model/X-transom model
8	O-ring	1	Not reusable
9	Screw	2	ø4 × 16 mm
10	Plate	1	
11	Shift position switch	1	
12	Bolt	2	M6 × 50 mm
13	Bushing	1	
14	Clip	2	
15	Bracket	1	
16	Bushing	1	
17	Lever	1	

Upper case and steering arm

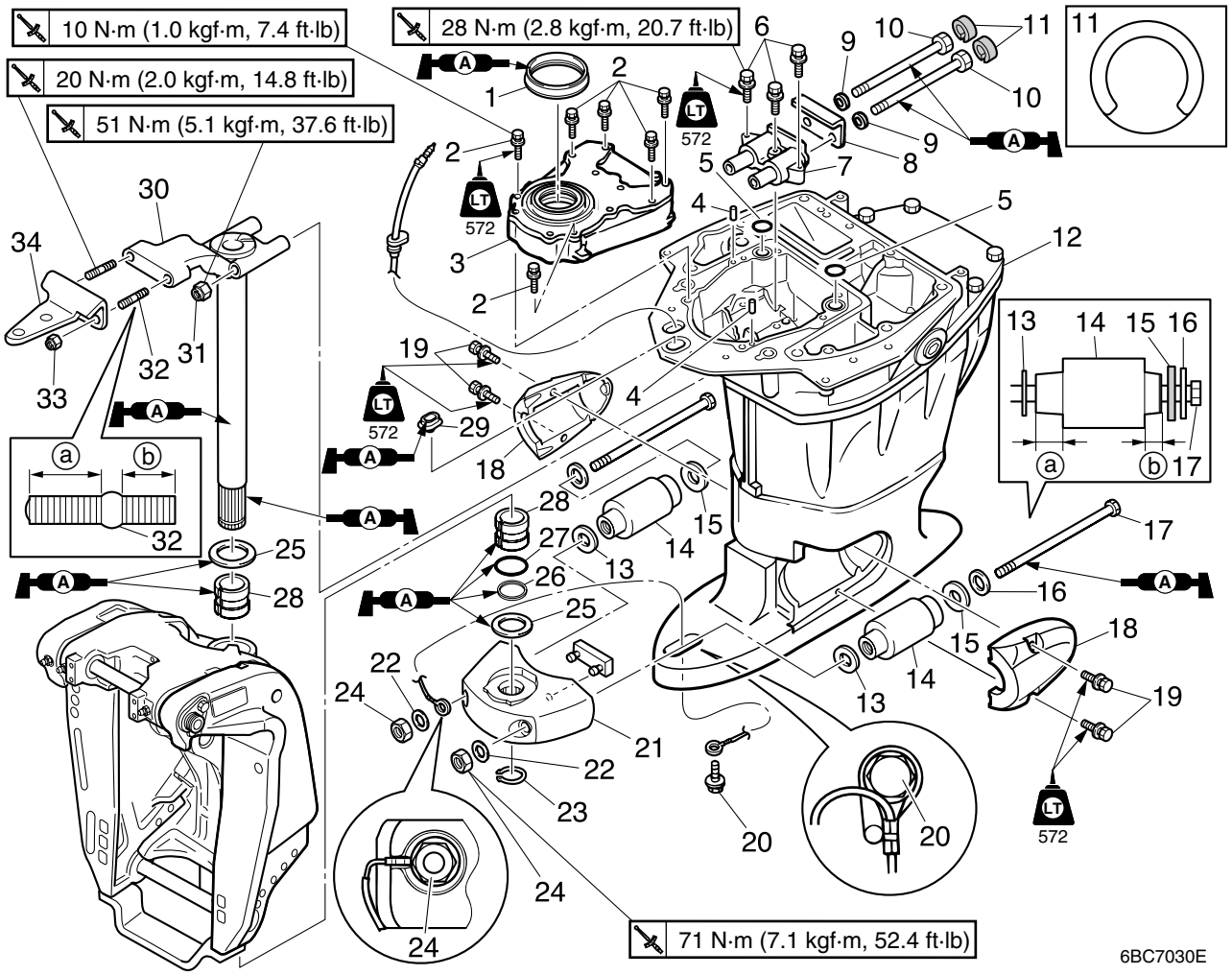

No.	Part name	Q'ty	Remarks
1	Rubber seal	1	Not reusable
2	Bolt	6	M6 × 45 mm
3	Oil pump assembly	1	
4	Dowel	2	
5	O-ring	2	Not reusable
6	Bolt	3	M8 × 45 mm
7	Upper mount	1	
8	Plate	1	
9	Washer	2	
10	Bolt	2	M12 × 193 mm
11	Damper	2	
12	Upper case assembly	1	
13	Washer	2	
14	Lower mount	2	ⓐ > ⓑ
15	Rubber	2	
16	Washer	2	
17	Bolt	2	M14 × 225 mm

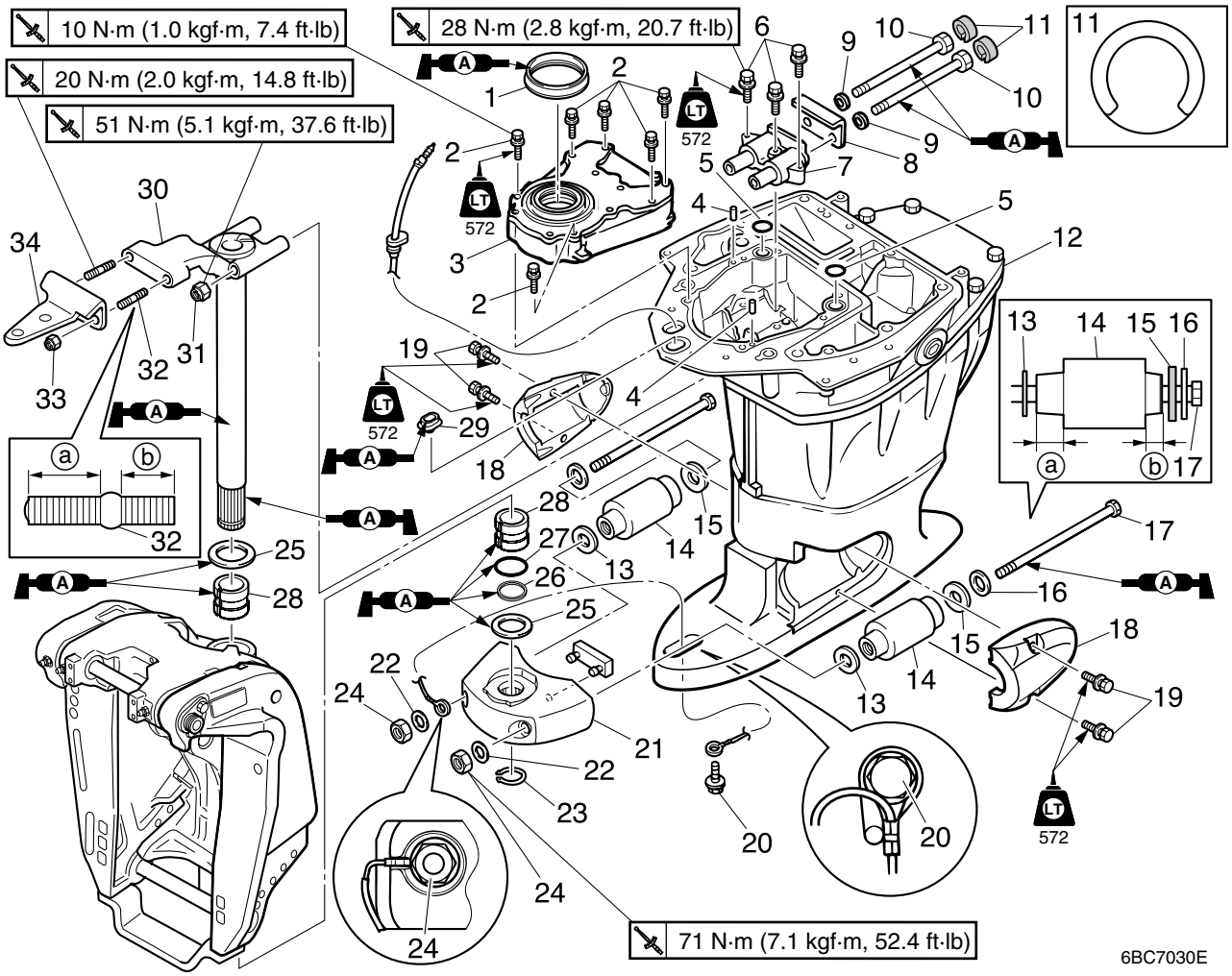

No.	Part name	Q'ty	Remarks
18	Cover	2	
19	Bolt	4	M10 × 40 mm
20	Bolt	1	M6 × 10 mm
21	Steering yoke	1	
22	Washer	2	
23	Circlip	1	
24	Nut	2	
25	Washer	2	
26	Bushing	1	
27	O-ring	1	Not reusable
28	Bushing	2	
29	Grommet	1	
30	Steering arm	1	L-transom model/X-transom model
31	Self-locking nut	2	
32	Stud bolt	2	ⓐ > ⓑ
33	Self-locking nut	2	
34	Hook	1	Remote control model

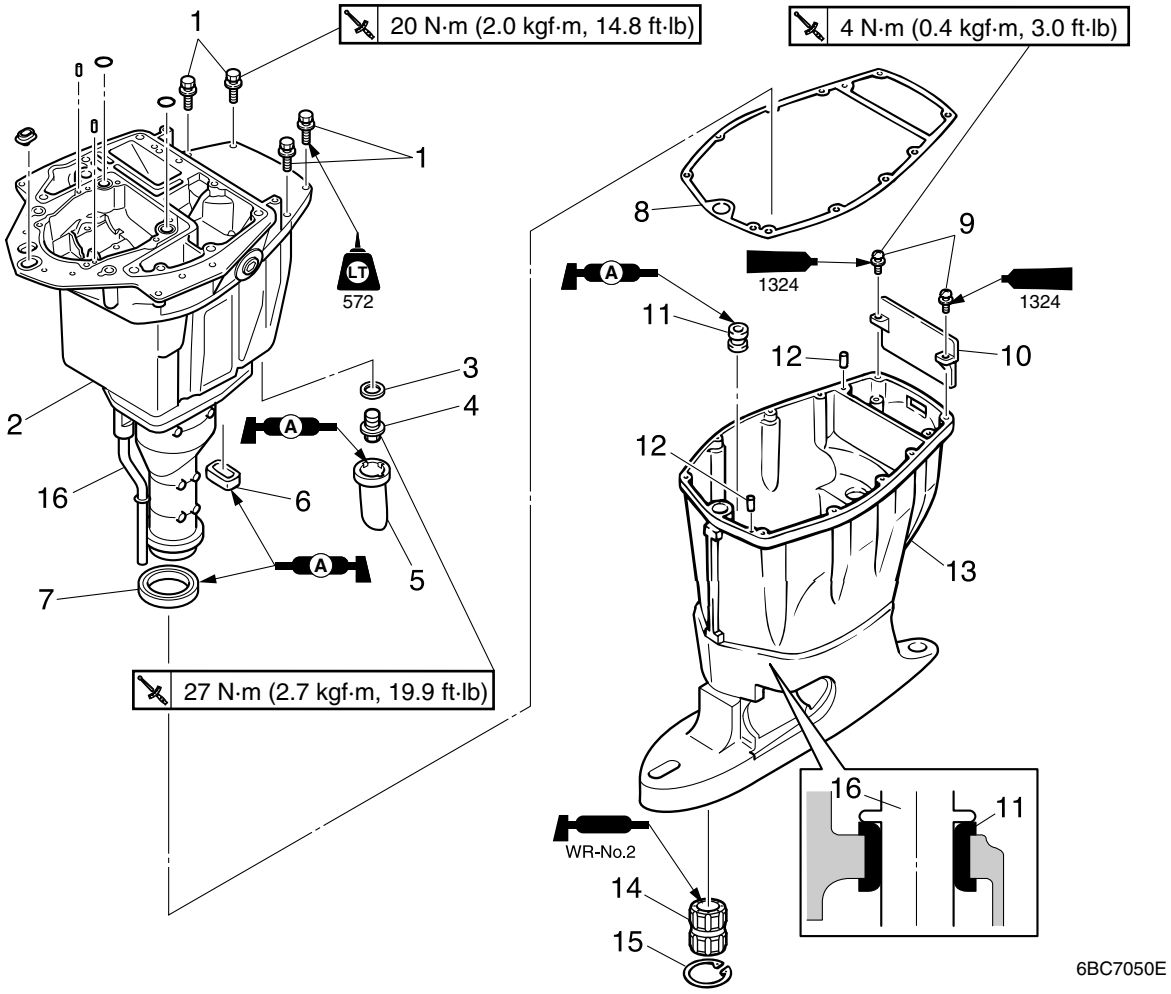

No.	Part name	Q'ty	Remarks
1	Bolt	4	M8 × 40 mm
2	Oil pan assembly	1	
3	Gasket	1	Not reusable
4	Engine oil drain bolt	1	M14 × 12 mm
5	Damper	1	
6	Rubber seal	1	
7	Rubber seal	1	Not reusable
8	Gasket	1	Not reusable
9	Screw	2	ø6 × 16 mm
10	Baffle plate	1	
11	Rubber seal	1	
12	Dowel	2	
13	Upper case	1	L-transom model/X-transom model
14	Drive shaft bushing	1	
15	Circlip	1	
16	Cooling water pipe	1	L-transom model/X-transom model

Bracket unit

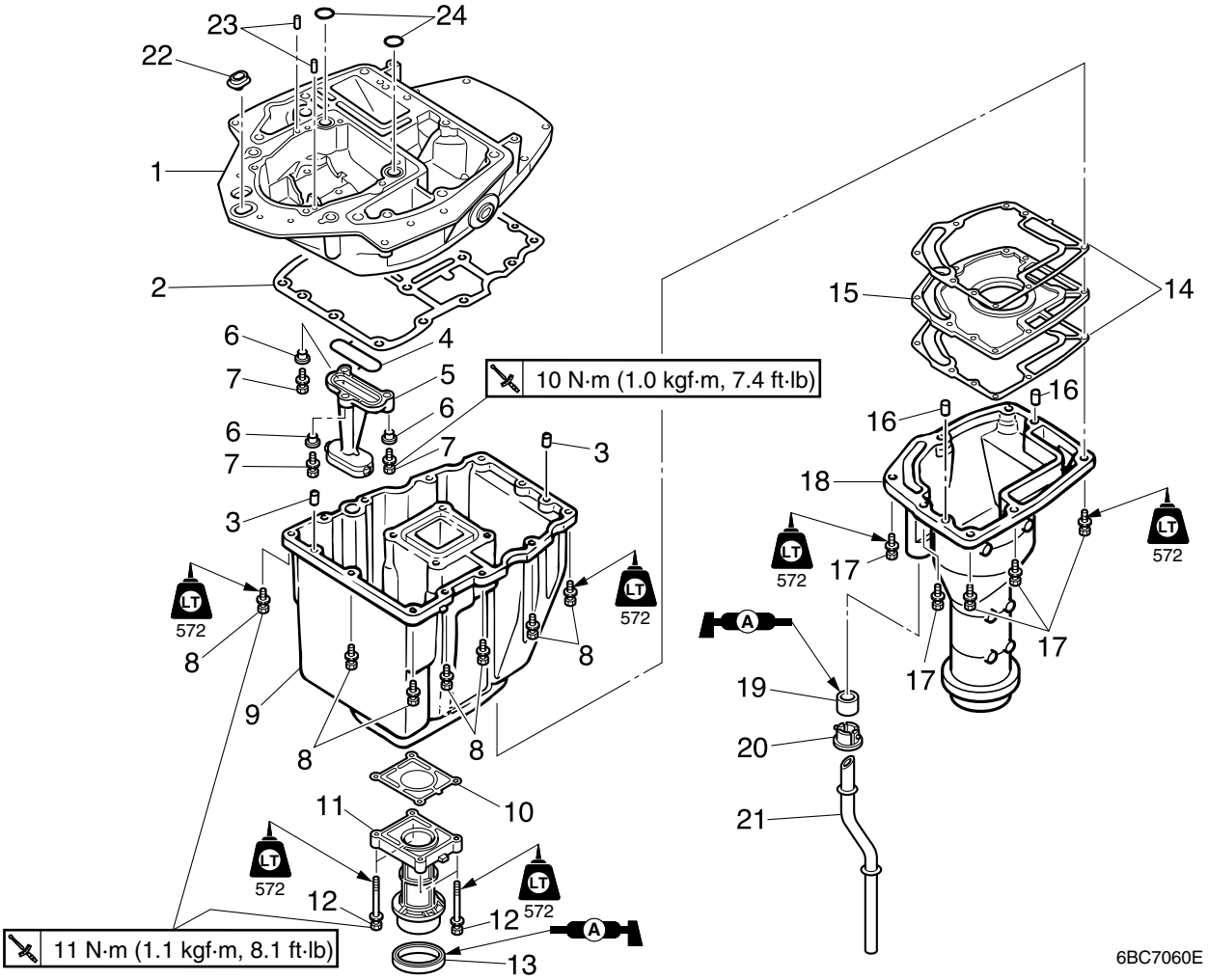

No.	Part name	Q'ty	Remarks
1	Exhaust guide	1	
2	Gasket	1	Not reusable
3	Dowel	2	
4	Gasket	1	Not reusable
5	Oil strainer	1	
6	Collar	3	
7	Bolt	3	M6 × 25 mm
8	Bolt	12	M6 × 25 mm
9	Oil pan	1	
10	Gasket	1	Not reusable
11	Exhaust manifold	1	
12	Bolt	4	M6 × 70 mm
13	Rubber seal	1	Not reusable
14	Gasket	2	Not reusable
15	Plate	1	
16	Dowel	2	
17	Bolt	7	M6 × 30 mm

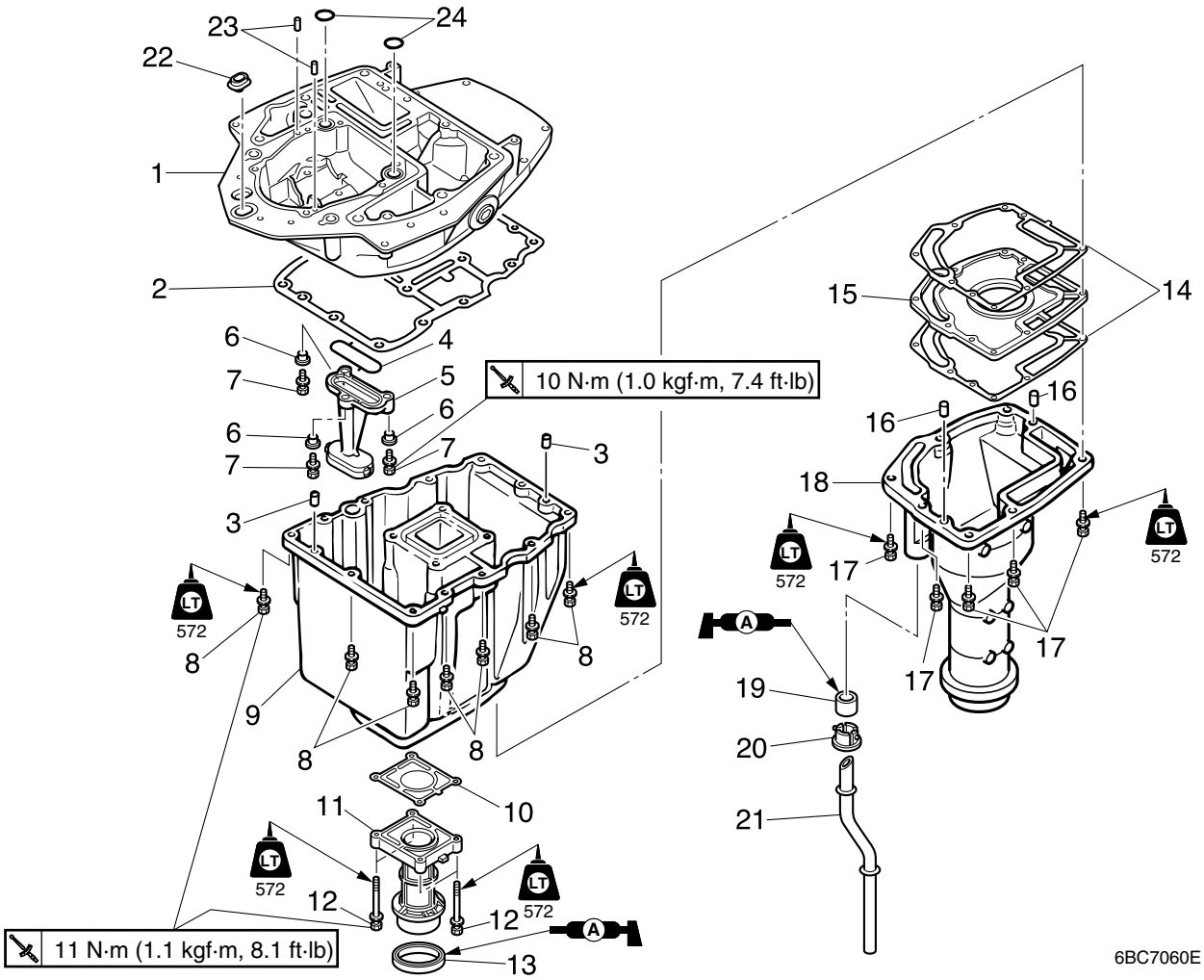

No.	Part name	Q'ty	Remarks
18	Muffler	1	L-transom model/X-transom model
19	Seal	1	
20	Cover	1	
21	Cooling water pipe	1	L-transom model/X-transom model
22	Grommet	1	
23	Dowel	2	
24	O-ring	2	Not reusable

7

Oil pump

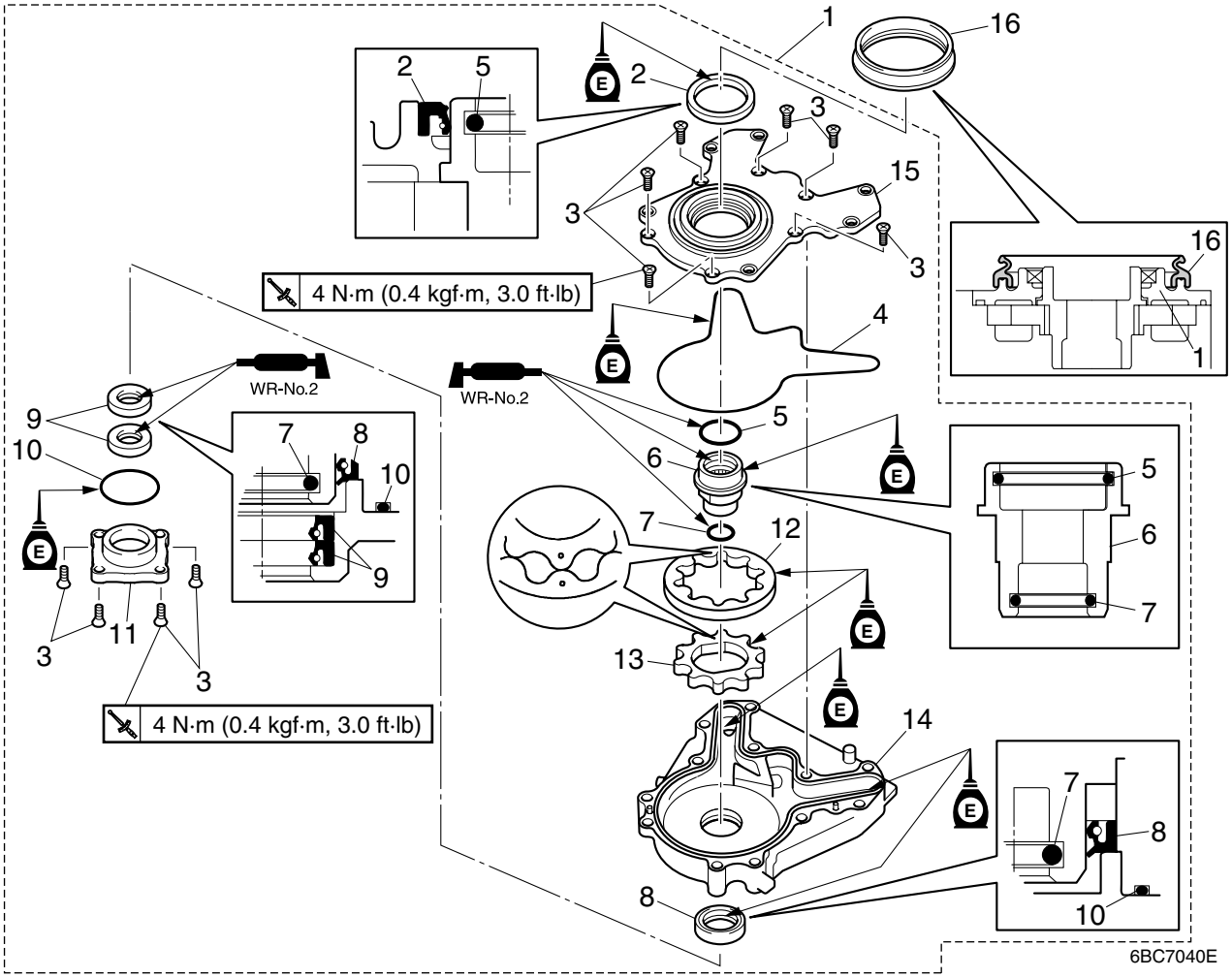

No.	Part name	Q'ty	Remarks
1	Oil pump assembly	1	
2	Oil seal	1	Not reusable
3	Screw	10	ø6 × 10 mm
4	Gasket	1	Not reusable
5	O-ring	1	Not reusable
6	Pump shaft	1	
7	O-ring	1	Not reusable
8	Oil seal	1	Not reusable
9	Oil seal	2	Not reusable
10	O-ring	1	Not reusable
11	Oil seal housing	1	
12	Outer rotor	1	
13	Inner rotor	1	
14	Oil pump case	1	
15	Oil pump cover	1	
16	Rubber seal	1	Not reusable

Removing the upper case

NOTE:
- Drain the engine oil before removing the upper case assembly.
- Be sure to remove the shift rod assembly before removing the upper case assembly from the bracket assembly.

1. Remove the oil pump assembly ① from the upper case assembly.

2. Disconnect the ground lead ② and speedometer hose ③.

3. Remove the upper and lower mounting nuts ④, ⑤ from the bracket assembly, and then remove the upper case assembly ⑥.

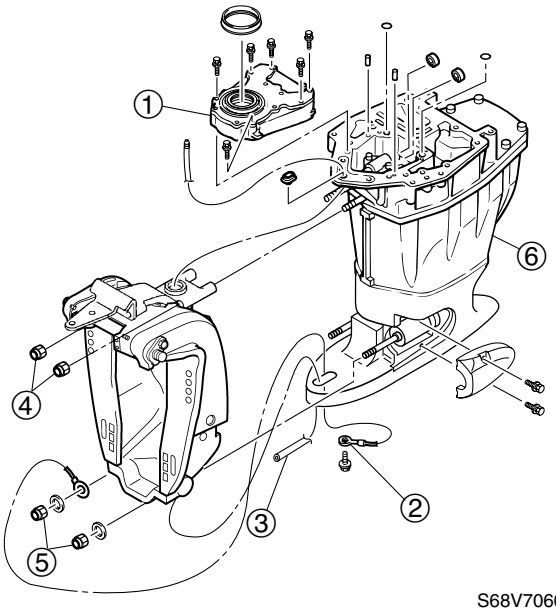

S68V7060

Disassembling the oil pump

1. Remove the oil seal housing screws ①, and then remove the oil seal housing ②.

2. Remove the oil pump cover screws ③, and then disassemble the oil pump.

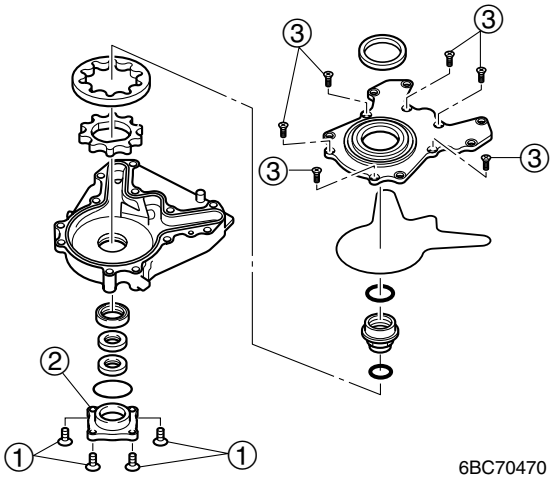

6BC70470

Checking the oil pump

1. Check the inner rotor, outer rotor and inner surface of the oil pump case. Replace the oil pump assembly if the inner rotor and outer rotor are cracked or worn, or if the inner surface of the oil pump case is scratched.

2. Check the pump shaft. Replace if cracked or worn.

Assembling the oil pump

1. Install a new oil seal into the oil pump cover to the specified depth ⓐ.

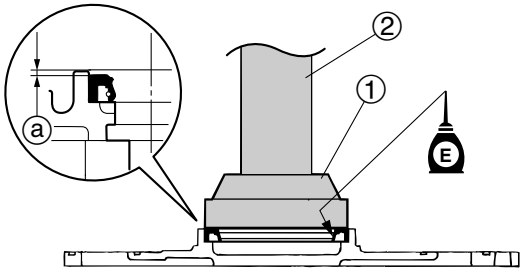

6BC70725

	Bearing outer race attachment ①: 90890-06625 Driver rod LS ②: 90890-06606

	Installation depth ⓐ: 0.5 ± 0.3 mm (0.02 ± 0.01 in)

7

2. Install a new oil seal into the oil pump case.

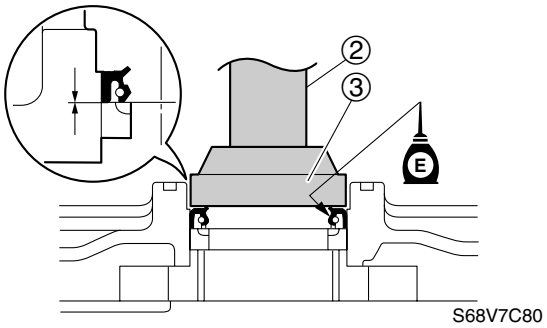

	Bearing outer race attachment ③: 90890-06628 Driver rod LS ②: 90890-06606

3. Install the new oil seals into the oil seal housing.

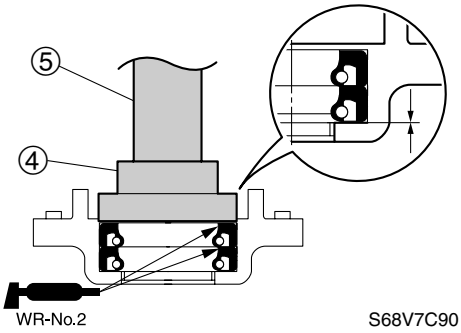

	Needle bearing attachment ④: 90890-06612 Driver rod SS ⑤: 90890-06604

4. Install new O-rings ⑦ and ⑧ into the pump shaft ⑥.

5. Install the inner rotor ⑨, outer rotor ⑩, pump shaft ⑥ and new gasket ⑪ into the oil pump case ⑫, and then tighten the oil pump cover screws ⑬ to the specified torque.

NOTE:
- Before assembling the oil pump, lubricate the oil pump inner surface.
- Align the mark on the inner rotor with mark on the outer rotor as shown, when installing them.

6. Install the new o-ring ⑭, oil seal housing ⑮, and then tighten the oil seal housing screws ⑯ to the specified torque.

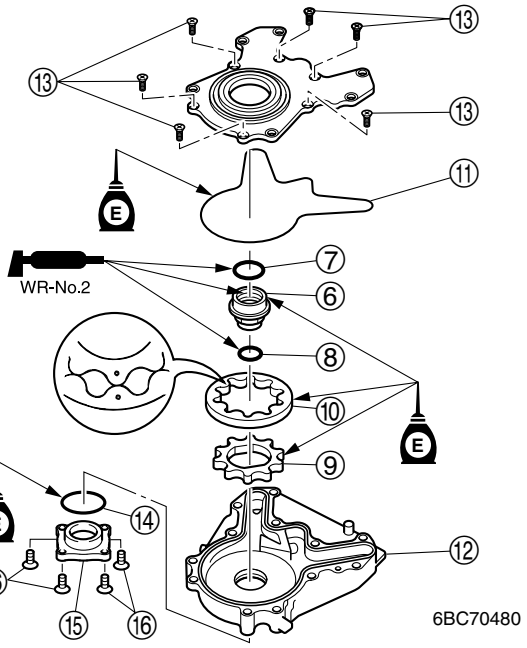

	Oil pump cover screw ⑬: 4 N·m (0.4 kgf·m, 3.0 ft·lb) Oil seal housing screw ⑯: 4 N·m (0.4 kgf·m, 3.0 ft·lb)

Disassembling the upper case

1. Remove the engine oil drain bolt.

NOTE:
Make sure that the engine oil is drained, before disassembling the upper case.

2. Remove the oil pan assembly bolts ①, and then remove the oil pan assembly ② from the upper case ③.

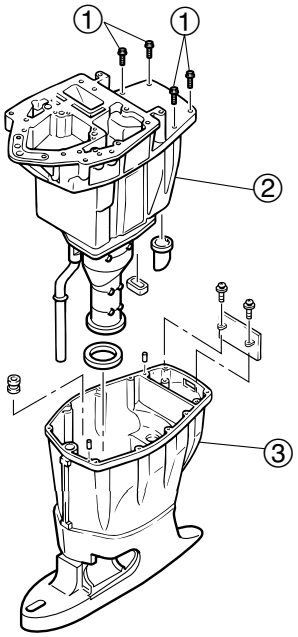

3. Place the upper case upside down, and then remove the circlip ④. Then remove the drive shaft bushing ⑤.

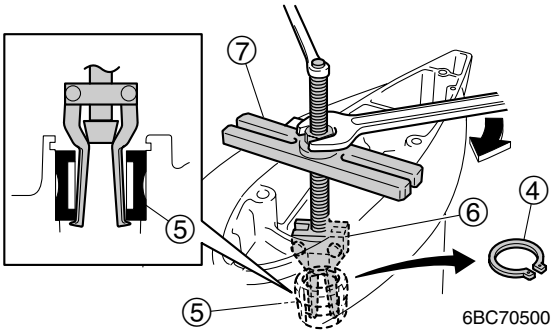

	Bearing puller assembly ⑥: 90890-06535 Stopper guide plate ⑦: 90890-06501

Checking the drive shaft bushing

1. Check the drive shaft bushing. Replace if cracked or worn.

Disassembling the oil pan and exhaust manifold

1. Remove the cooling water pipe ①, muffler ②, gaskets ③, plate ④ and dowels ⑤ from the oil pan ⑥, and then remove the cover ⑦, seal ⑧ from the muffler ②.

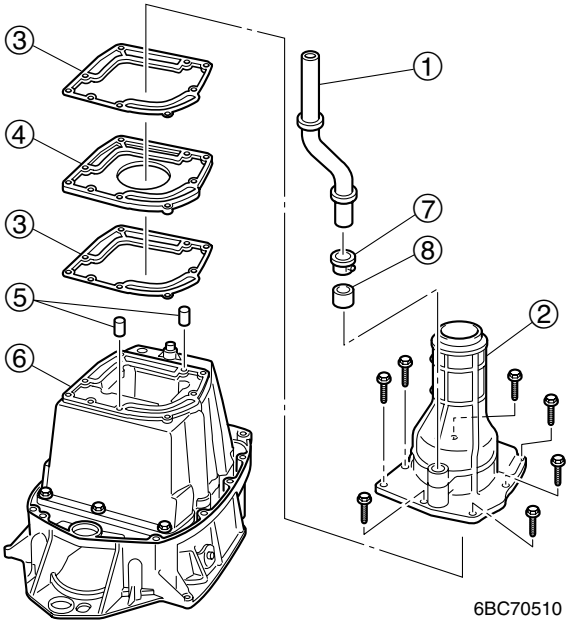

2. Remove the exhaust manifold ⑨, gasket ⑩, oil pan ⑥ and rubber seal ⑪.

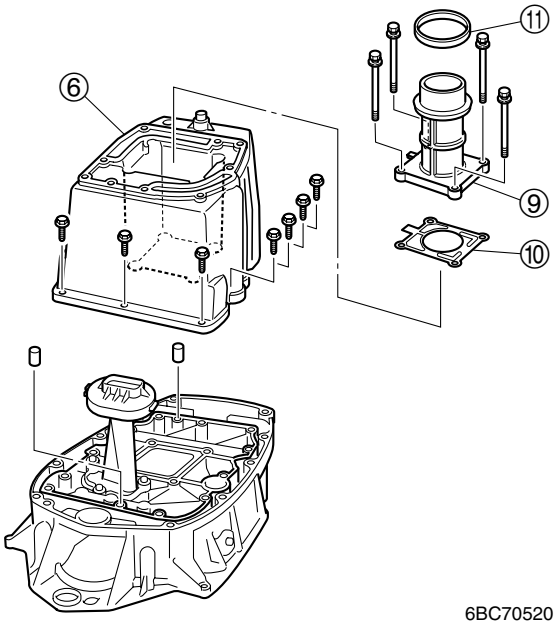

7

3. Remove the oil strainer ⑫, gasket ⑬ and gasket ⑭ from the exhaust guide ⑮.

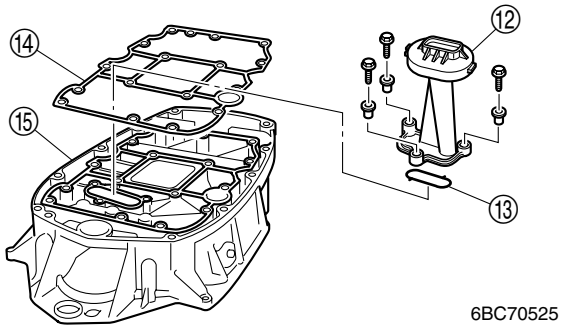

Checking the oil pan and exhaust manifold

NOTE:
Clean the removed parts.

1. Check the oil pan. Replace if cracked or corroded

2. Check the exhaust guide, exhaust manifold and muffler. Replace if cracked or corroded.

Checking the oil strainer

1. Check the oil strainer. Clean if there is dirt or residue.

Assembling the oil pan and exhaust manifold

1. Install the new gasket ①, collars ② and oil strainer ③ onto the exhaust guide ④, and then tighten the oil strainer bolts ⑤ to the specified torque.

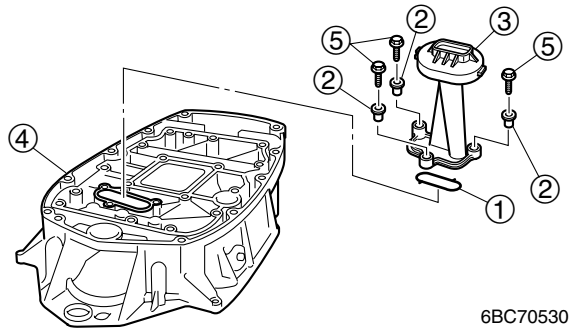

	Oil strainer bolt ⑤: 10 N·m (1.0 kgf·m, 7.4 ft·lb)

2. Install the dowels ⑥, new gasket ⑦ and oil pan ⑧ onto the exhaust guide ④.

3. Install the new gasket ⑨, exhaust manifold ⑩ and new rubber seal ⑪.

NOTE:
Make sure that the sealant side of the gasket ⑨ faces to the exhaust manifold ⑩.

4. Tighten the exhaust manifold bolts ⑫ and oil pan bolts ⑬ to the specified torque.

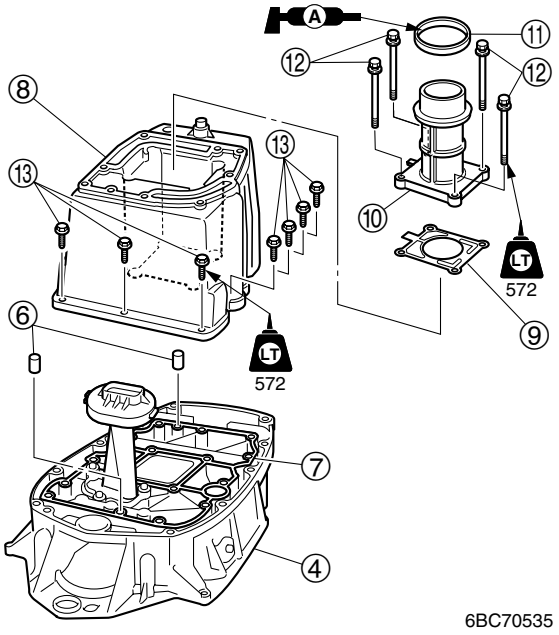

	Exhaust manifold bolt ⑫: 11 N·m (1.1 kgf·m, 8.1 ft·lb) Oil pan bolt ⑬: 11 N·m (1.1 kgf·m, 8.1 ft·lb)

5. Install the dowels ⑭, new gaskets ⑮ and the plate ⑯.

6. Install the muffler ⑰ onto the oil pan, and then tighten the bolts ⑱.

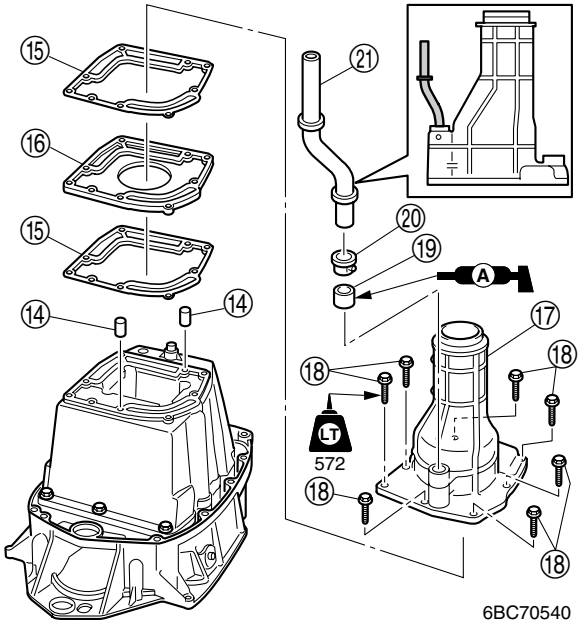

7. Install the seal ⑲, cover ⑳ and cooling water pipe ㉑ into the muffler ⑰.

NOTE:
Install the cooling water pipe ㉑ so that it is positioned as shown.

Assembling the upper case

1. Install the drive shaft bushing ① into the upper case, and then install the circlip ②.

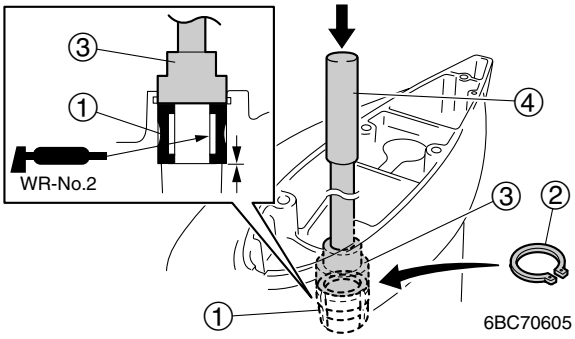

NOTE:
After installing the drive shaft bushing, apply grease to the inside of the bushing.

	Needle bearing attachment ③: 90890-06653 Driver rod L3 ④: 90890-06652

2. Install the baffle plate ⑤, and then tighten the screw ⑥ to the specified torque.

3. Install the rubber seal ⑦ into the joint hole ⓐ in the upper case.

4. Install the rubber seal ⑧ and new rubber seal ⑨ into the oil pan assembly ⑩.

5. Install the dowels ⑪ and new gasket ⑫ onto the upper case.

6. Install the oil pan assembly ⑩ to the upper case ⑬, and then tighten the oil pan assembly bolts ⑭ to the specified torque.

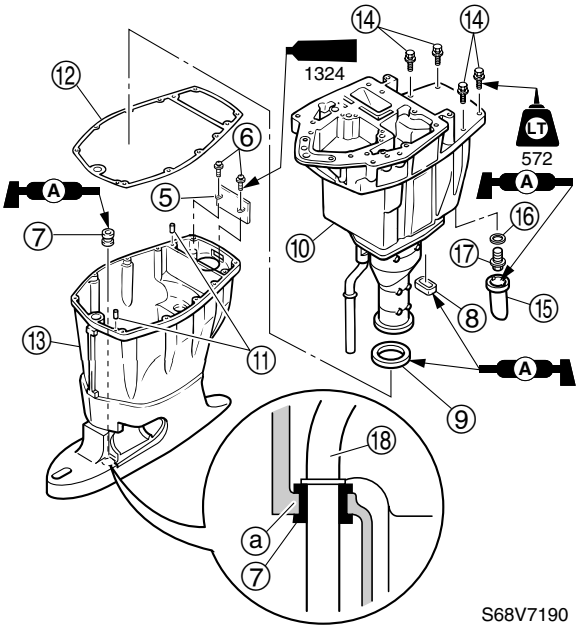

NOTE:

- Be sure to insert the cooling water pipe ⑱ into the joint hole ⓐ in the upper case as shown.
- Install the damper ⑮ to the upper case ⑬ before installing the oil pan assembly ⑩ onto the upper case ⑬.

	Baffle plate screw ⑥: 4 N·m (0.4 kgf·m, 3.0 ft·lb) Oil pan assembly bolt ⑭: 20 N·m (2.0 kgf·m, 14.8 ft·lb)

7. Install a new gasket ⑯, and then tighten the engine oil drain bolt ⑰ to the specified torque.

	Engine oil drain bolt ⑰: 27 N·m (2.7 kgf·m, 19.9 ft·lb)

Installing the upper case

1. Install the upper mount bracket ① and upper mount bolts ② into the upper case.

2. Tighten the mount bracket bolts ③ to the specified torque.

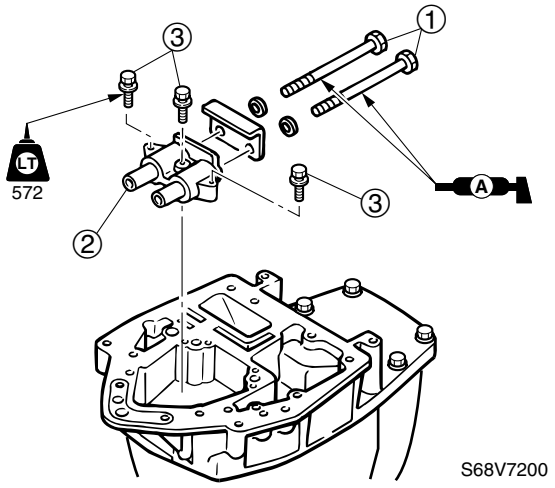

	Mount bracket bolt ③: 28 N·m (2.8 kgf·m, 20.7 ft·lb)

3. Install the lower mounts ④ and lower mount bolts ⑤ onto the upper case, and then install the upper case to the bracket assembly ⑥. Then tighten the upper mounting nuts ⑦ and lower mounting nuts ⑧ to the specified torque.

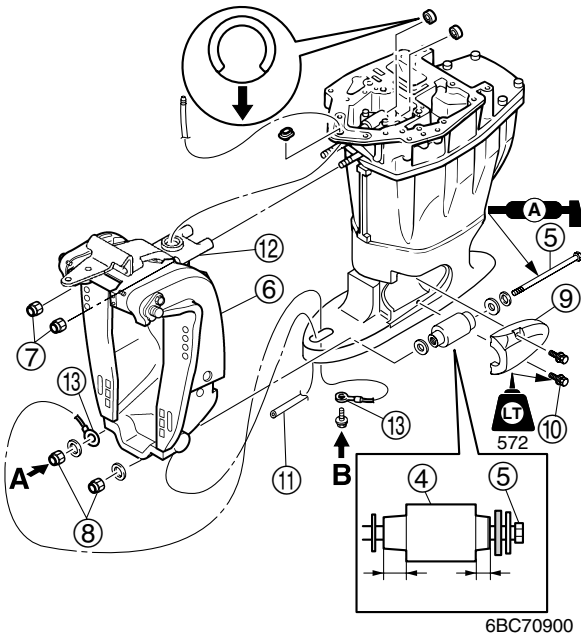

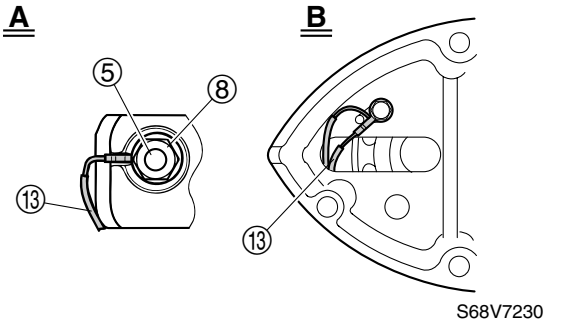

NOTE:

- Install the lower mounts ④ with the longer side facing forward as shown.
- Connect the ground lead to the lower mount bolt ⑤ of the starboard side as shown.

	Upper mounting nut ⑦: 51 N·m (5.1 kgf·m, 37.6 ft·lb) Lower mounting nut ⑧: 71 N·m (7.1 kgf·m, 52.4 ft·lb)

4. Install the covers ⑨, and then tighten the cover bolts ⑩.

5. Pass the speedometer hose ⑪ through the upper case and steering arm ⑫.

6. Connect the ground lead ⑬ to the upper case as shown.

7. Install the new O-rings ⑭ and dowels ⑮ onto the upper case assembly.

8. Install the oil pump assembly ⑯, and then tighten the oil pump bolts ⑰ to the specified torque.

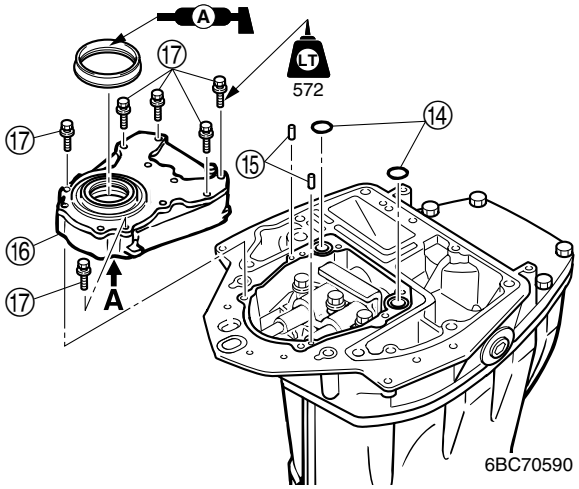

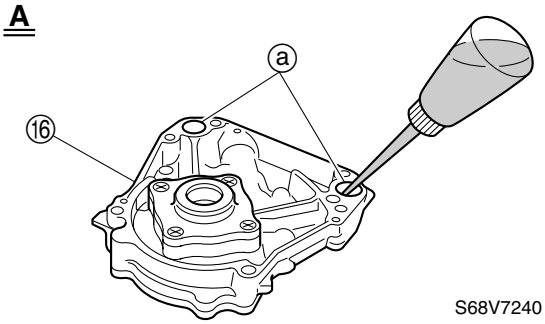

CAUTION:

Before installing the oil pump, be sure to fill it with engine oil through the oil passages ⓐ.

	Oil pump bolt ⑰: 10 N·m (1.0 kgf·m, 7.4 ft·lb)

Removing the steering arm

1. Remove the circlip ①, and then remove the steering yoke ②.

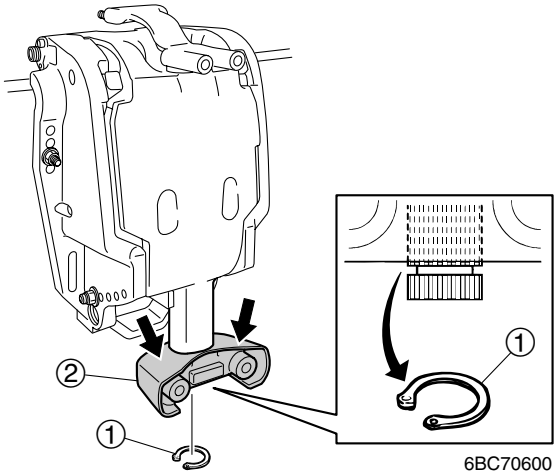

NOTE:
Place a block of wood to the thick part of the steering yoke ②, and then remove it by striking with a hammer.

2. Remove the steering arm ③ from the swivel bracket by pulling the steering arm off the swivel bracket ④.

3. Remove the washer ⑤, bushing ⑥, O-ring ⑦, bushing ⑧ and washer ⑨ from the swivel bracket ④.

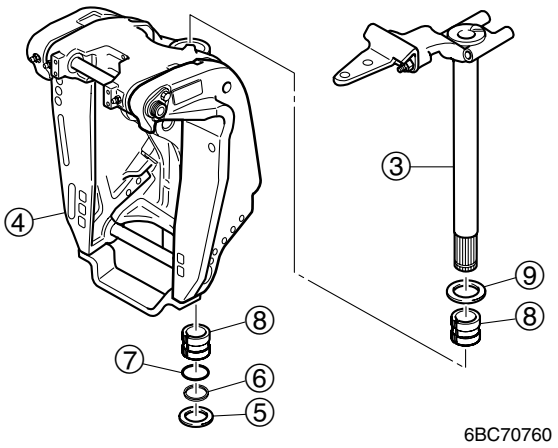

Installing the steering arm

1. Install the washer ① and bushing ② onto the steering arm ③.

2. Install the steering arm onto the swivel bracket ④.

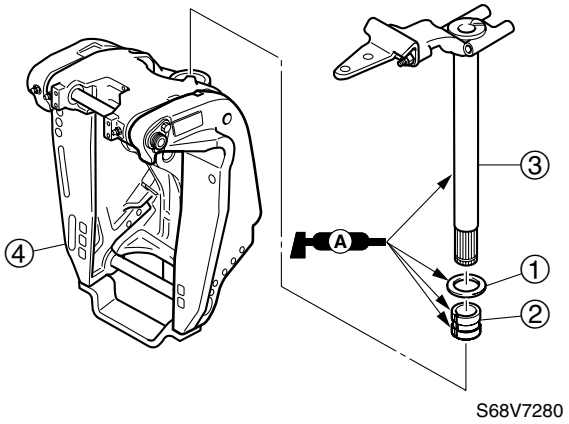

3. Install the bushing ⑤, new O-ring ⑥, bushing ⑦ and washer ⑧ into the swivel bracket.

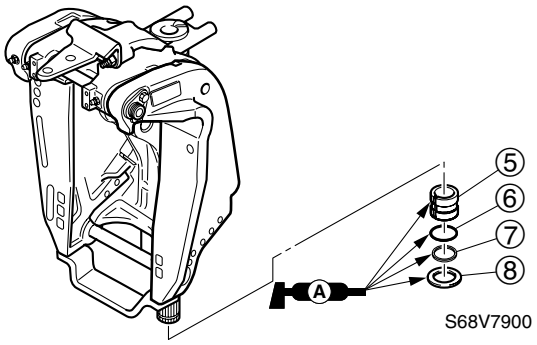

4. Install the steering yoke ⑨ onto the steering arm ③.

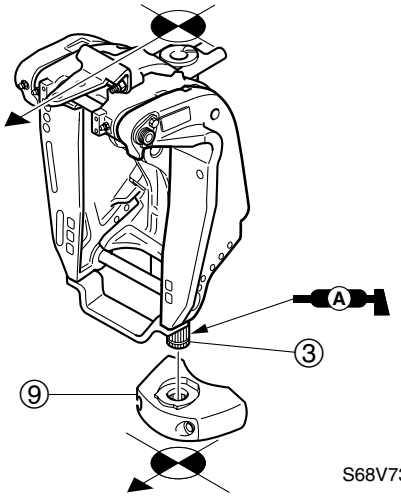

NOTE:
Make sure that they are both facing in the same direction as shown.

5. Hold the steering arm ③, and then strike the steering yoke ⑨ until the groove ⓐ for installing the circlip is visible.

NOTE:
- Place block of wood to the thick part of the steering yoke ⑨, and then install it by striking with a hammer.
- To improve working efficiency, strike the bracket assembly when it is held upside down.

6. Install the circlip ⑩.

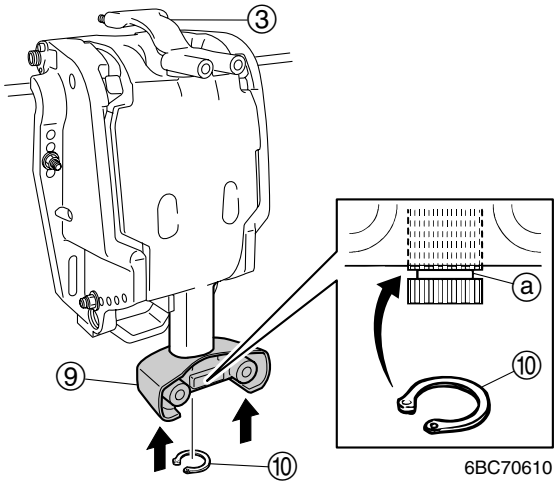

7. Apply grease to the grease nipple ⑪ on the swivel bracket ④ until grease comes out from both the upper and lower bushings ⓑ.

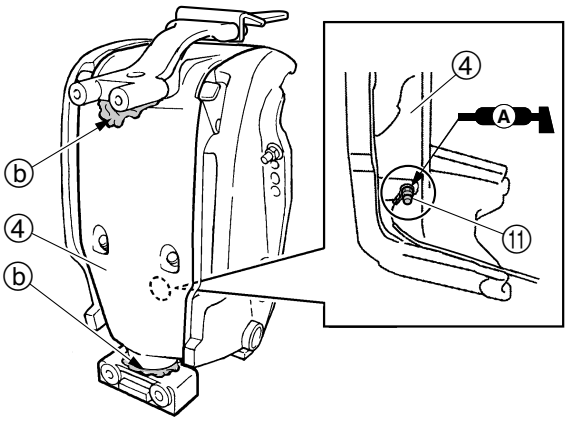

7

Clamp bracket and swivel bracket

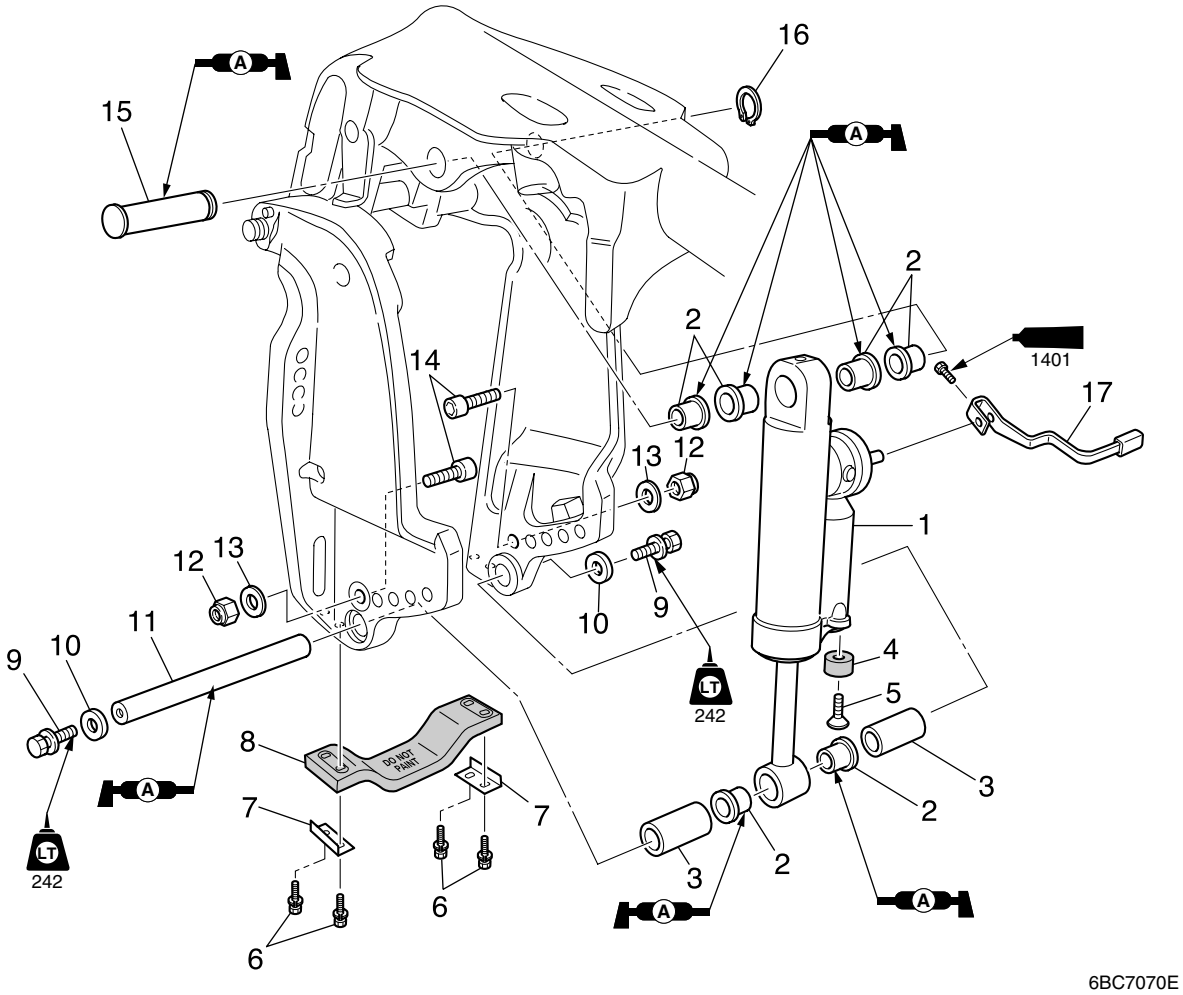

No.	Part name	Q'ty	Remarks
1	Hydro tilt assembly	1	
2	Bushing	6	
3	Collar	2	
4	Anode	1	
5	Screw	1	ø6 × 25 mm
6	Bolt	4	M6 × 30 mm
7	Plate	2	
8	Anode	1	
9	Bolt	2	M10 × 30 mm
10	Washer	2	
11	Shaft	1	
12	Self-locking nut	2	
13	Washer	2	
14	Stopper bolt	2	M12 × 40 mm
15	Shaft	1	
16	Circlip	1	
17	Tilt lock lever	1	

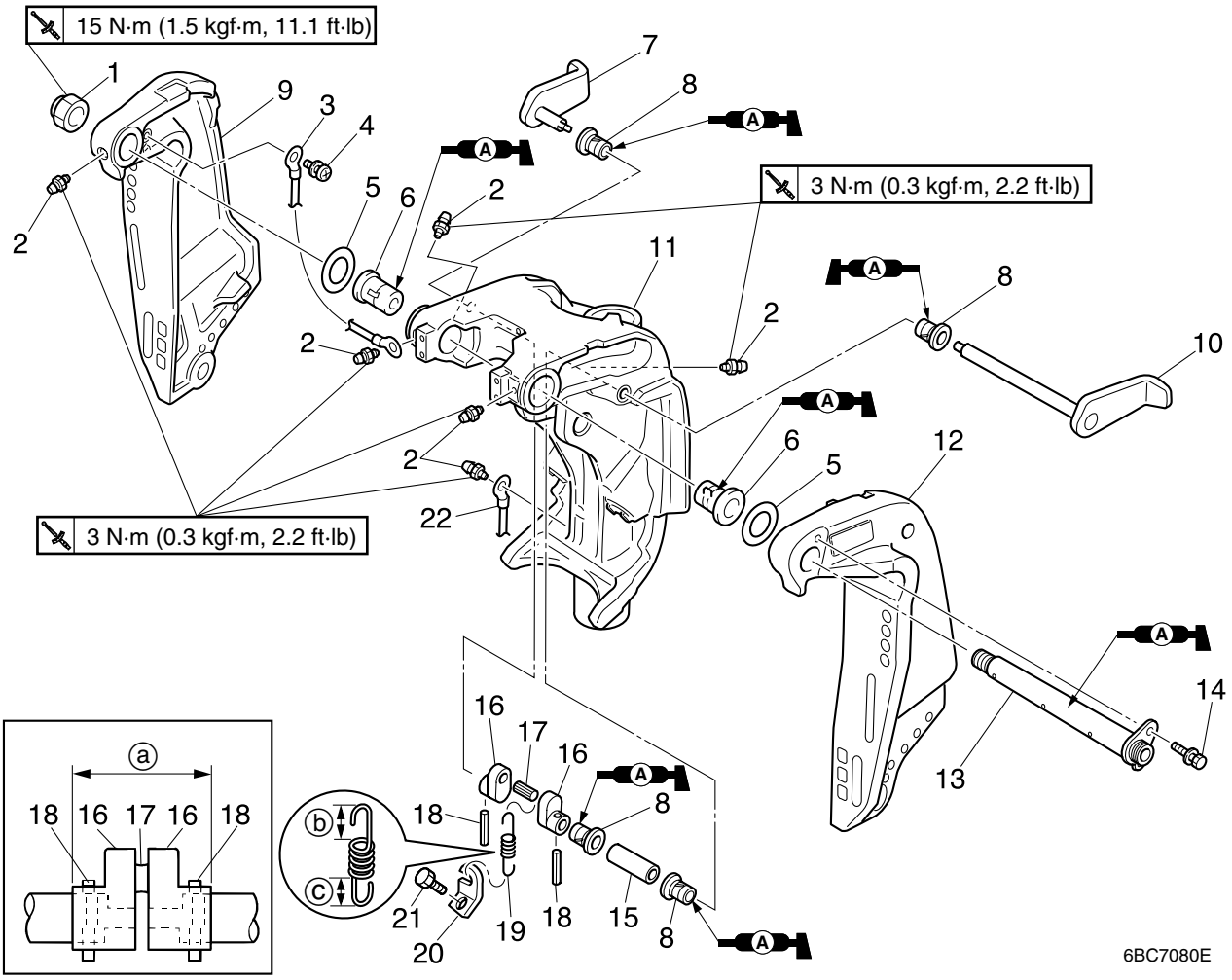

No.	Part name	Q'ty	Remarks
1	Self-locking nut	1	
2	Grease nipple	6	
3	Ground lead	1	
4	Screw	1	ø6 × 12 mm
5	Washer	2	
6	Bushing	2	
7	Tilt stop lever	1	
8	Bushing	4	
9	Clamp bracket	1	
10	Tilt stop lever	1	
11	Swivel bracket	1	L-transam model/X-transam model
12	Clamp bracket	1	
13	Through tube	1	
14	Bolt	1	M8 × 20 mm
15	Collar	1	
16	Distance collar	2	ⓐ: 30.3–30.6 mm (1.19–1.20 in)
17	Pin	1	

Bracket unit

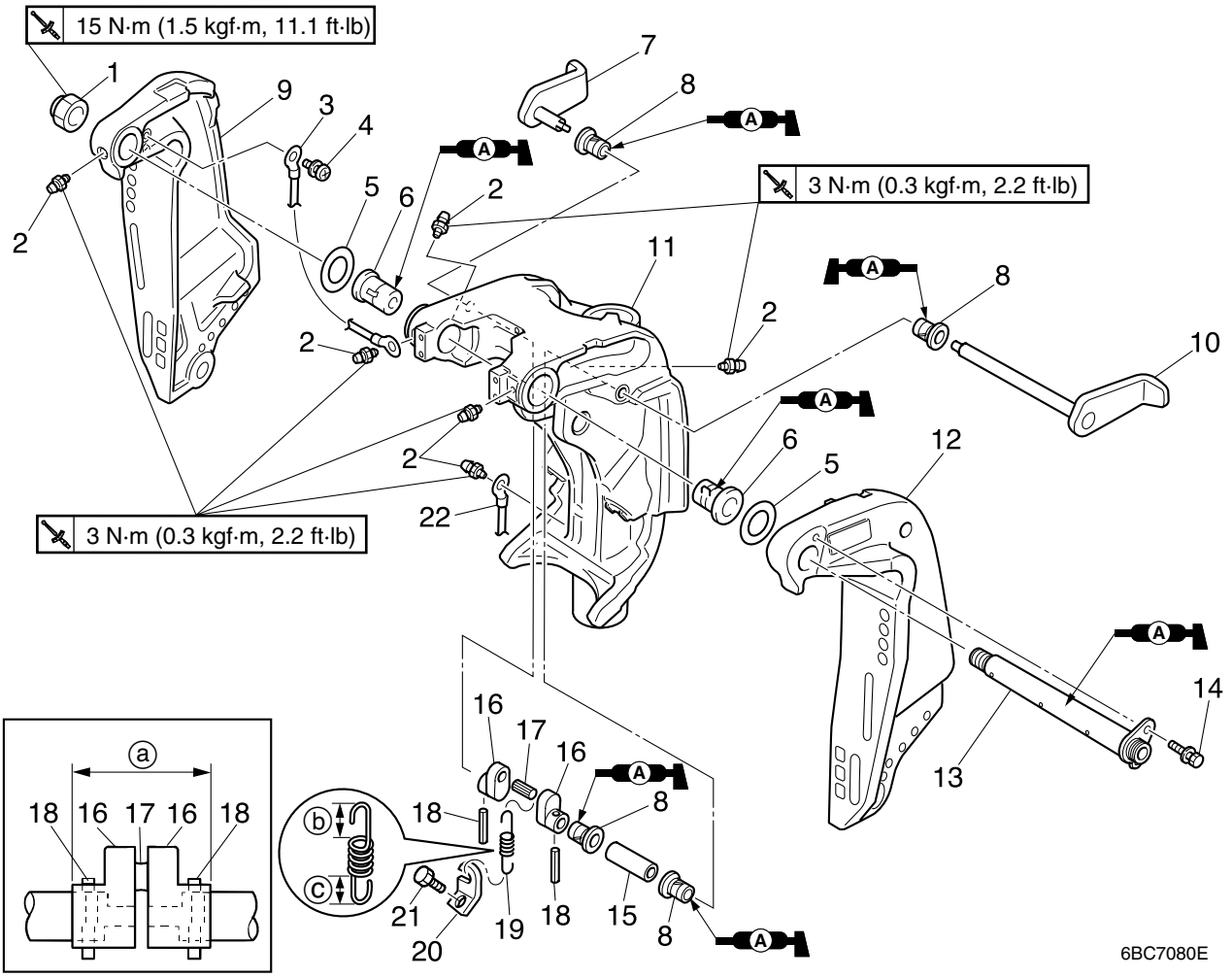

No.	Part name	Q'ty	Remarks
18	Spring pin	2	
19	Spring	1	ⓑ > ⓒ
20	Spring hook	1	
21	Bolt	1	M6 × 10 mm
22	Ground lead	1	L-transam model/X-transam model

Removing the hydro tilt assembly

1. Fully tilt the outboard motor up, and then support it with the tilt stop lever ①.

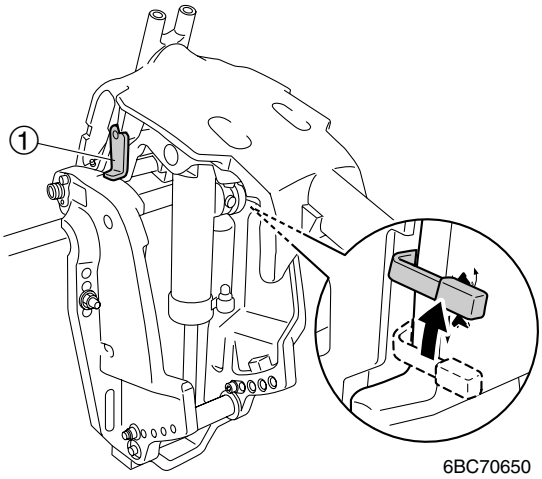

⚠WARNING

- **After tilting the outboard motor up, be sure to support it with the tilt stop lever. Otherwise, the outboard motor could suddenly fall if the hydro tilt assembly should lose gas pressure.**
- **When removing the hydro tilt assembly with the power unit installed, be sure to suspend the outboard motor. Otherwise, the outboard motor could suddenly fall and result in severe injury.**

2. Remove the lower mount shaft bolts ②, washers ③, and then remove the lower mount shaft ④.

NOTE:

Make sure that the tilt lock lever ⓐ is in the lock position before removing the hydro tilt assembly.

3. Remove the circlip ⑤ and upper mount shaft ⑥, and then remove the hydro tilt assembly ⑦ from the swivel bracket.

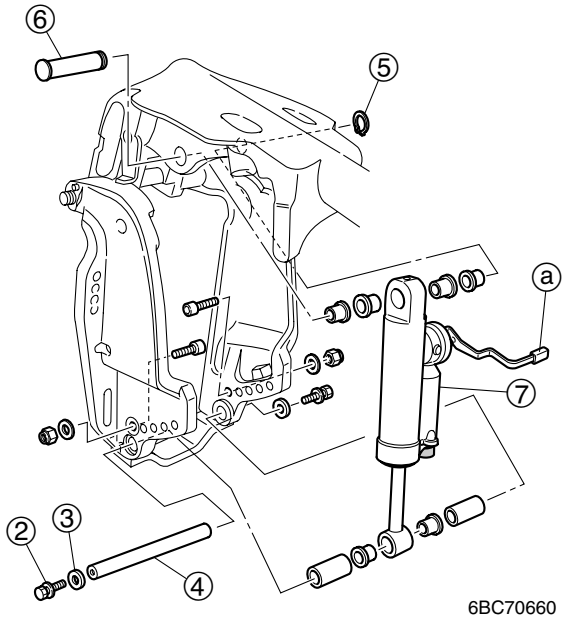

⚠WARNING

- **Do not disassemble or puncture the hydro tilt assembly, as high-pressure gas is contained.**
- **Do not apply heat or fire to the hydro tilt assembly, as high-pressure gas is contained.**

7

Removing the clamp bracket

1. Remove the anode ①.

2. Remove the ground lead ②.

3. Remove the bolt ③, self-locking nut ④ and through tube ⑤, and then remove the clamp brackets ⑥ and ⑦ from the swivel bracket.

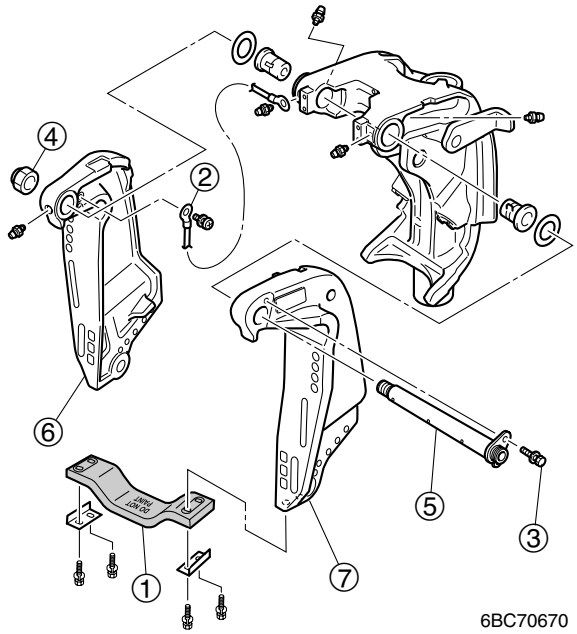

4. Remove the spring ⑧, spring hook ⑨ and spring pins ⑩.

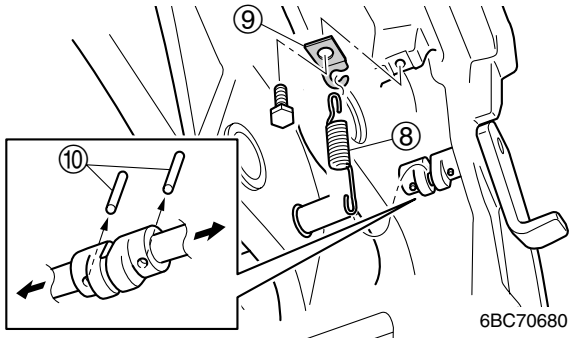

NOTE:
Remove the spring pin ⑩ towards the direction shown.

5. Remove the tilt stop levers ⑪, distance collar assembly ⑫, collar ⑬ and bushings ⑭.

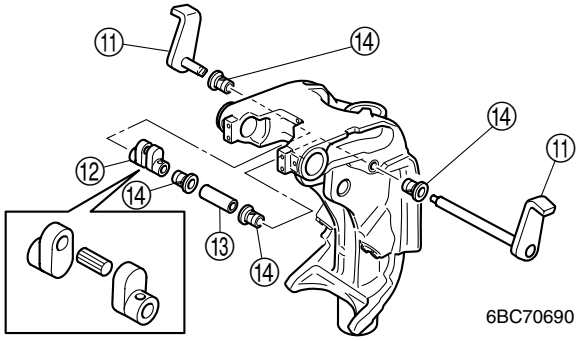

Installing the clamp bracket

1. Assemble the distance collar assembly.

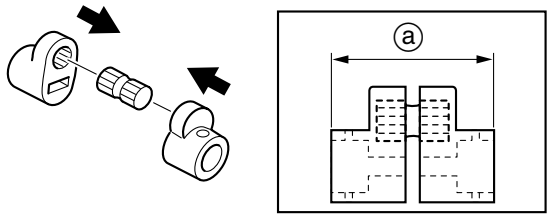

NOTE:
Make sure that the distance ⓐ shown is within specification.

Distance ⓐ:
30.3–30.6 mm (1.19–1.20 in)

2. Install the bushings ①, collar ②, distance collar assembly ③ and tilt stop levers ④.

3. Install the spring pins ⑤, spring hook ⑥ and spring ⑦.

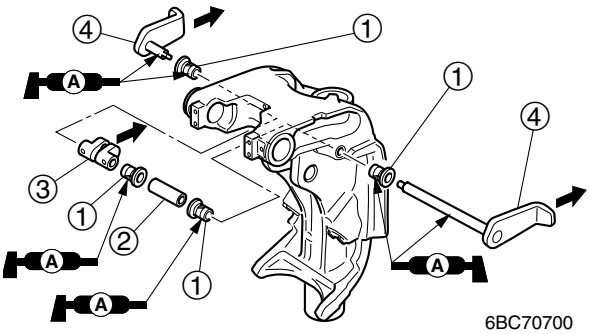

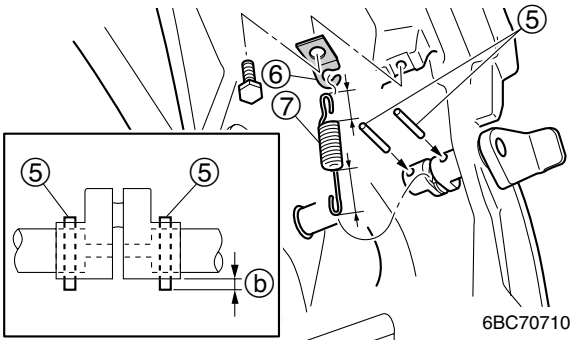

NOTE:

- Be sure to install the distance collar assembly ③ and tilt stop levers ④ so that they are facing in the direction shown.
- Install the spring pin ⑤ towards the direction shown.
- Hook the longer end of spring ⑦ to the distance collar assembly ③.

	Distance ⓑ: 3.0 mm (0.12 in)

4. Install the bushings ⑧, washers ⑨, clamp brackets ⑩, ⑪ and through tube ⑫ to the swivel bracket, and then install the bolt ⑬ and self-locking nut ⑭. Then tighten the self-locking nut ⑭ to the specified torque.

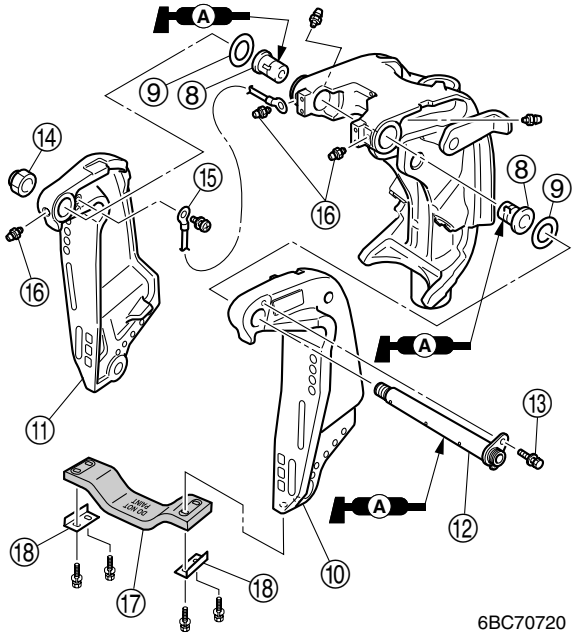

	Self-locking nut ⑭: 15 N·m (1.5 kgf·m, 11.1 ft·lb)

5. Install the ground lead ⑮, and then tighten the grease nipples ⑯ to the specified torque.

	Grease nipple ⑯: 3 N·m (0.3 kgf·m, 2.2 ft·lb)

6. Install the anode ⑰ and plate ⑱, and then tighten the bolts.

7

Installing the hydro tilt assembly

1. Fully tilt the outboard motor up, and then support it with the tilt stop lever ①.

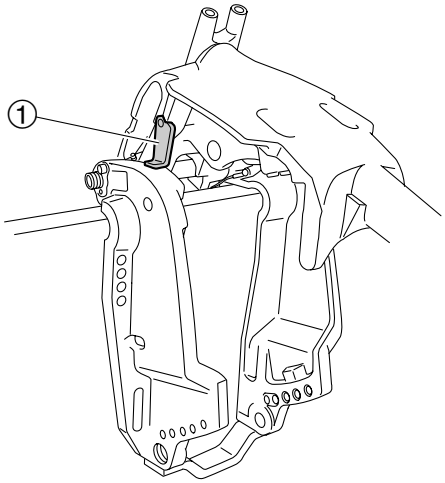

WARNING

- **After tilting the outboard motor up, be sure to support it with the tilt stop lever.**
- **When installing the hydro tilt assembly with the power unit installed, be sure to suspend the outboard motor. Otherwise, the outboard motor could suddenly fall and result in severe injury.**

2. Install the bushings ② to the hydro tilt assembly and swivel bracket.

3. Install the upper end of the hydro tilt assembly into the swivel bracket, and then install the upper mount shaft ③ and circlip ④.

4. Install the collars ⑤, lower mount shaft ⑥ and washers ⑦, and then tighten the lower mount shaft bolts ⑧.

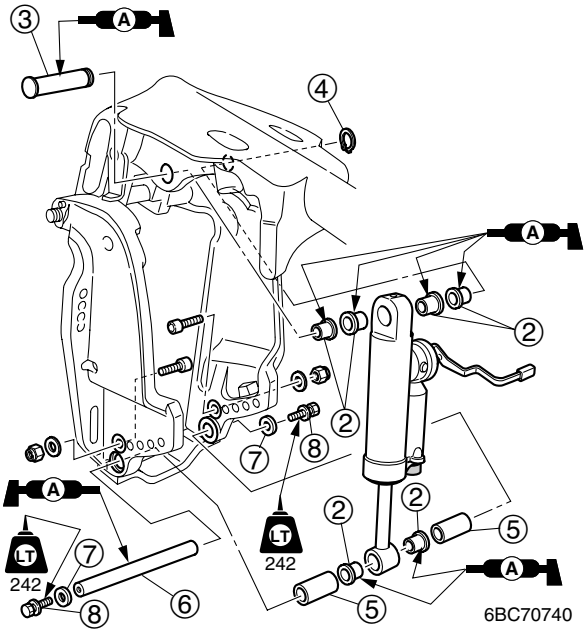

5. Apply grease to all grease nipples until grease comes out from the bushings.

NOTE:

See “Lubricating the outboard motor” (3-18).

— MEMO —

Electrical system

Electrical component and wiring harness routing 8-1
Port view 8-1
Starboard view 8-3
Bow view 8-5
Aft view 8-7
Top view 8-9
Bottom cowling 8-11
Tiller handle (tiller handle model) 8-13

Checking the electrical component 8-15
Checking using the YDIS 8-15
Measuring the peak voltage 8-15

Starter motor 8-16
Removing the starter motor 8-18
Checking the starter motor operation 8-18
Checking the magnet switch 8-19
Checking the starter motor pinion 8-19
Disassembling the starter motor 8-20
Checking the armature 8-22
Checking the brush holder and brush 8-23
Assembling the starter motor 8-23
Installing the starter motor 8-26

Starting system 8-27
Checking the engine start switch 8-27
Checking the neutral switch 8-28
Checking the starter relay 8-29

Ignition and ignition control system 8-30
Checking the ignition spark 8-30
Checking the ignition coil and spark plug wire 8-31
Checking the pulser coil assembly 8-33
Checking the engine stop lanyard switch 8-33

Engine electric control system 8-34
Checking the fuse 8-34
Checking the main/high-pressure fuel pump relay 8-34
Checking the ECM 8-37
Checking the TPS 8-38
Checking the ISC 8-40
Checking the sensor assembly 8-41
Checking the cooling water temperature sensor 8-43
Checking the oil pressure switch 8-43
Checking the warning indicator assembly (tiller handle model) 8-45
Checking the buzzer (tiller handle model) 8-46

Checking the shift position switch 8-47
Checking the hour meter 8-49

Fuel control system 8-50
Checking the water detection switch 8-50
Checking the fuel injector 8-51
Checking the high-pressure fuel pump 8-52

Charging system 8-53
Checking the stator assembly 8-53
Checking the Rectifier Regulator 8-54

Electrical component and wiring harness routing

Port view

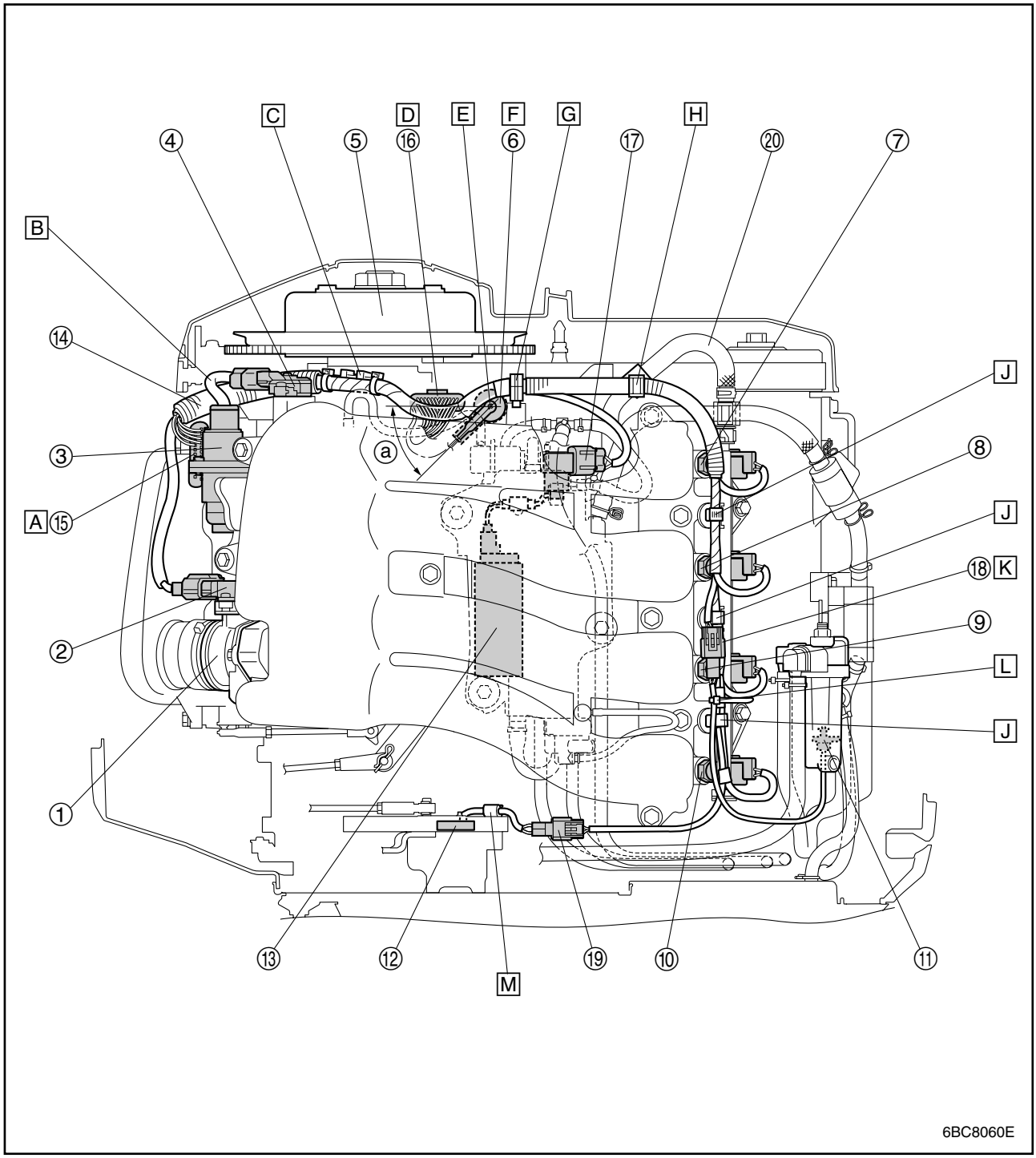

① Throttle body assembly
② TPS
③ ISC
④ Sensor assembly
⑤ Flywheel magnet
⑥ Oil pressure switch
⑦ Fuel injector #1
⑧ Fuel injector #2
⑨ Fuel injector #3
⑩ Fuel injector #4
⑪ Water detection switch (in the fuel filter assembly)
⑫ Shift position switch
⑬ High-pressure fuel pump (in the vapor separator)
⑭ Wiring harness
⑮ Joint connector 1
⑯ Joint connector 2

⑰ High-pressure fuel pump coupler
⑱ Water detection switch coupler
⑲ Shift position switch coupler
⑳ High-pressure fuel hose

A Push in the joint connector 1 completely to the bracket.
B After installing the flywheel magnet cover, put the ISC lead into the flywheel magnet cover.
C Push in the wiring harness clamp completely to the bracket.
D Push in the joint connector 2 completely to the bracket.
E Install the oil pressure switch lead in angle ⓐ (45° ± 20°) with the specified torque.
F Screw in the oil pressure switch until 2 threads are engaged, then apply LOCTITE 572 to the exposed switch threads, and then tighten the switch to the specified torque.
G Fasten the clamp of the intake manifold assembly with the white tape portion on the wiring harness.
H Fasten the high-pressure fuel hose and wiring harness with the clamp. Be sure to fasten the wiring harness at the small diameter position of the clamp. The clamp opening must face downward.
J Fasten the wiring harness with the clamp onto the fuel rail.
K Be sure that there is no slack in the wiring harness.
L Fasten the wiring harness and water detection switch lead at the white tape position with a plastic tie as shown. Be sure not to cut off the plastic tie ends. Locate the tie ends inside of the fuel filter cup assembly (rather than the center position).
M Pass the shift position switch lead through the clamp.

Starboard view

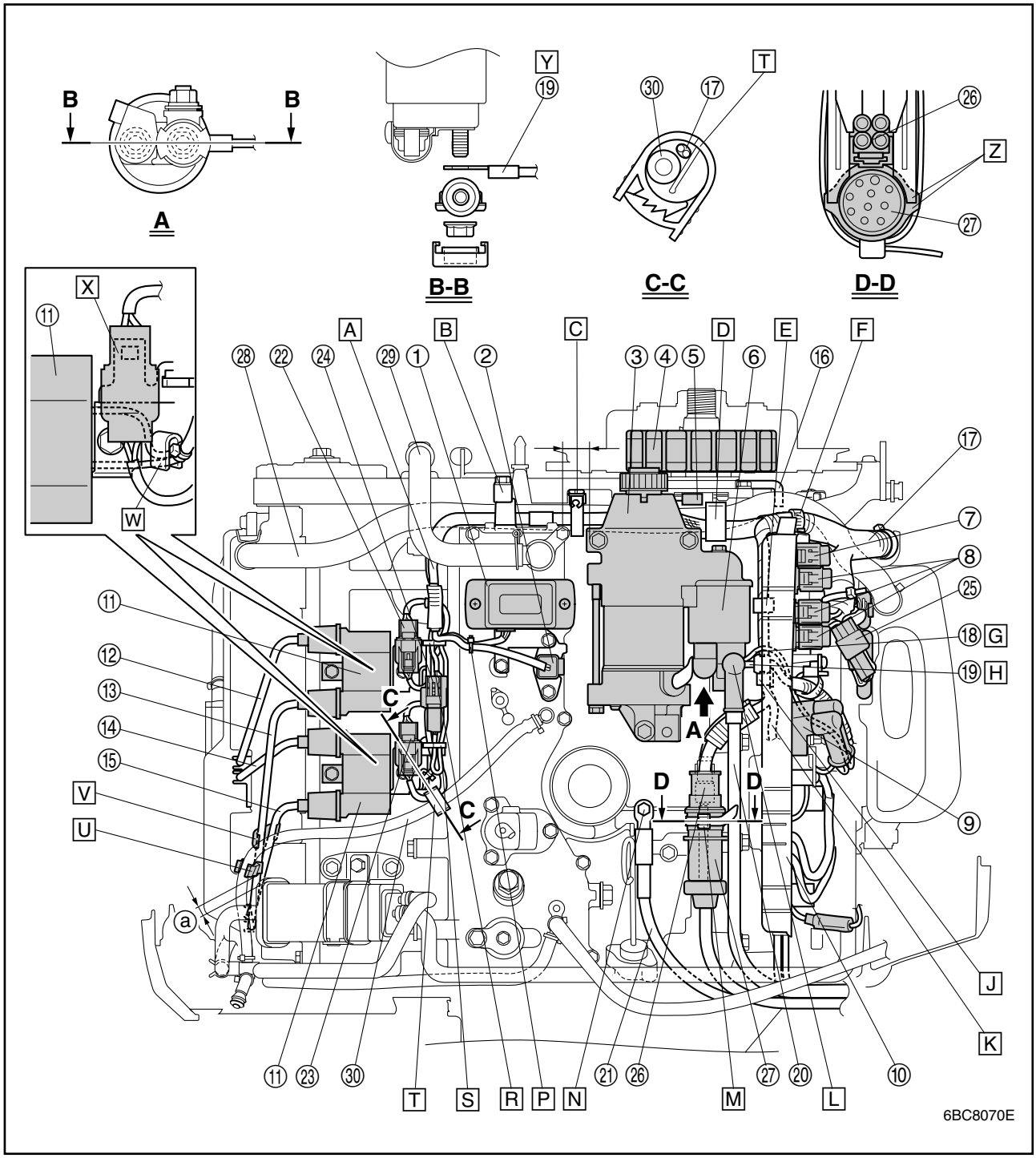

① Hour meter
② Cooling water temperature sensor
③ Starter motor
④ Stator assembly
⑤ Pulser coil assembly
⑥ Magnet switch
⑦ Fuse (30 A)
⑧ Fuse (20 A)
⑨ Starter relay
⑩ Junction box
⑪ Ignition coil
⑫ Spark plug wire #1
⑬ Spark plug wire #4
⑭ Spark plug wire #2
⑮ Spark plug wire #3
⑯ Stator assembly lead
⑰ Wiring harness
⑱ Starter motor lead (Br/W)

⑲ Magnet switch lead (R)
⑳ Positive battery cable
㉑ Negative battery cable
㉒ Ignition coil coupler (#1, #4)
㉓ Ignition coil coupler (#2, #3)
㉔ Hour meter coupler
㉕ Pulser coil assembly coupler
㉖ Warning indicator coupler (from tiller handle/tachometer)
㉗ 10-pin main harness coupler
㉘ Blowby hose
㉙ Cooling water hose
㉚ Cooling water hose

A Route the wiring harness behind the cooling water hose.
B Pass the wiring harness through the holder so that the harness passes in the front of the blowby hose.
C Install the clamp between the boss and the starter motor. Then, fasten the wiring harness and the blowby hose with the clamp.
D Pass the wiring harness through the holder so that the harness passes in the front of the blowby hose.
E Fasten the wiring harness with the clamp onto the junction box.
F Fasten the wiring harness with the clamp onto the bracket.
G Pass the starter motor lead (Br/W) between the junction box and crankcase, pull into the junction box, and then connect the lead to the starter relay.
H Pass the magnet switch lead (R) through the junction box, and then connect the lead to the magnet switch. Engage the concave part of grommet, being connected to the magnet switch lead, with the convex part of junction box.
J Fasten the wiring harness with the clamp onto the junction box.
K Pass the wiring harness between the junction box and crankcase, and then pull out the harness from the junction box.
L Lay out the positive battery cable on a line vertical to the terminal, and then connect this cable to the terminal.
M Insert the warning indicator coupler into position, and then fasten the 10-pin main harness coupler with the holder.
N Install the negative battery cable to the ground terminal and route the cable as shown.
P Fasten the hour meter lead and cooling water temperature sensor lead with a plastic tie.
R Pass the wiring harness, ignition coil lead (#1, #4) and hour meter lead through the holder, and then fix them to the bracket.
S Pass the wiring harness, ignition coil lead (#2, #3) and hour meter lead through the holder, and then fix them to the bracket. Be sure to fold up the hour meter lead as shown.
T Fasten the wiring harness (to ignition coil) and cooling water hose with the clamp.
U Fasten the cooling water hose and spark plug wire #4 with the holder, so that the holder aligns with the mark on the hose. Separate the holder from the canister to have distance ⓐ (10 mm or more).
V Fasten the spark plug wires #3 and #4 with the holder. These spark plug wires must not interfere with each other.
W Pass the ignition coil lead through the holder as shown.
X Insert the ignition coil coupler into the bracket.
Y Install the magnet switch lead to the magnet switch in the direction as shown.
Z Align the holder end with the projection of 10-pin main harness coupler.

Bow view

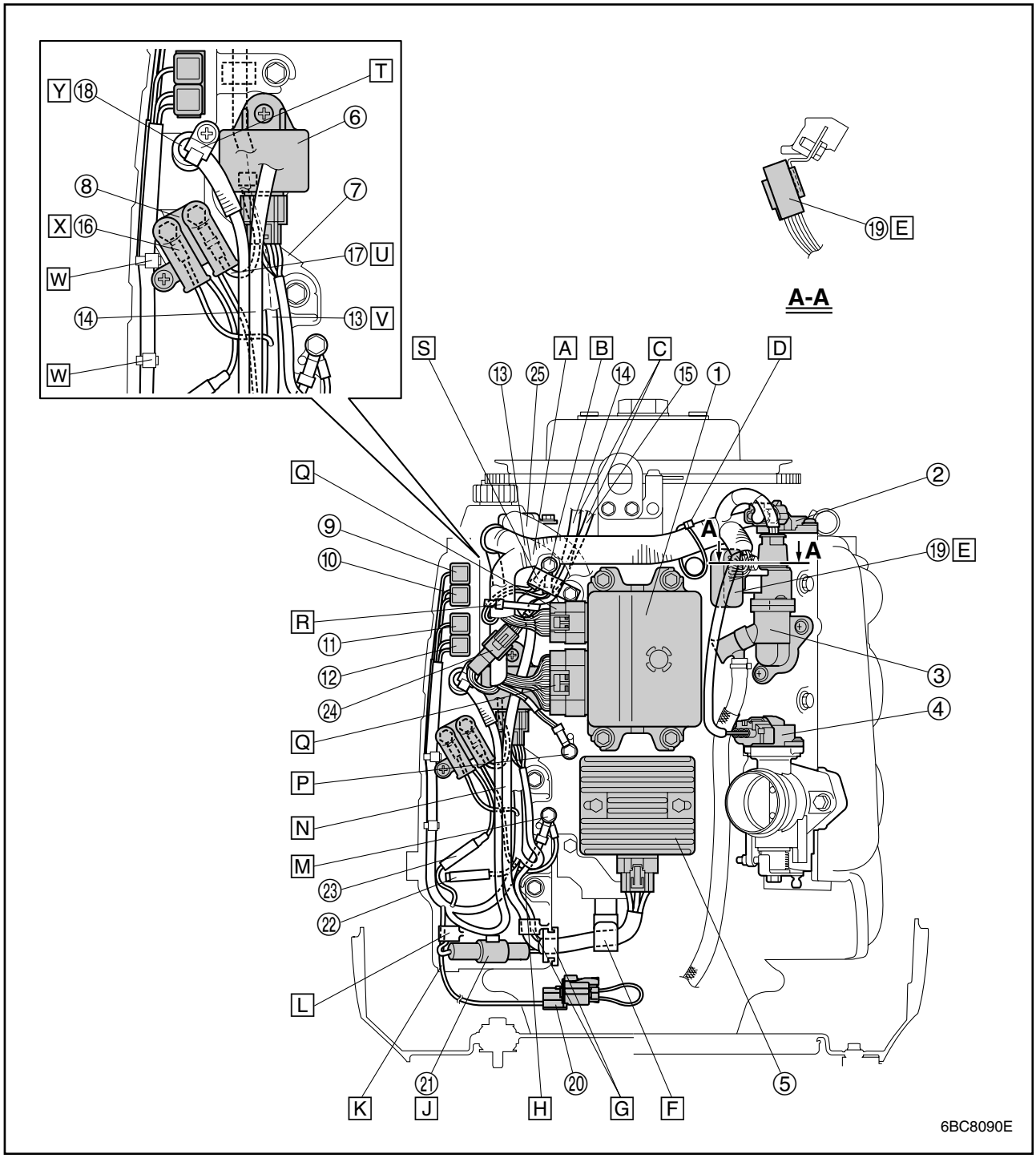

① ECM
② Sensor assembly
③ ISC
④ TPS
⑤ Rectifier Regulator
⑥ Main/high-pressure fuel pump relay
⑦ Junction box
⑧ Starter relay
⑨ Fuse (30 A): Starter relay
⑩ Fuse (20 A): Main, Rectifier Regulator
⑪ Fuse (20 A): Engine start switch
⑫ Fuse (20 A): ECM, Ignition coil, High-pressure fuel pump, Fuel injector, ISC
⑬ Wiring harness
⑭ Stator assembly lead
⑮ Pulser coil assembly lead
⑯ Starter relay lead (R)
⑰ Starter motor lead (Br/W)

⑱ Magnet switch lead (R)
⑲ Joint connector 1
⑳ YDIS communication coupler
㉑ Rectifier Regulator lead coupler
㉒ Diagnostic flush indicator B lead connector (L/W)
㉓ Starter relay lead connector (Br)
㉔ Pulser coil assembly coupler
㉕ Blowby hose

A Route the wiring harness to the outside of the blowby hose.
B Install the wiring harness ground leads, making sure that they contact the stopper.
C Pass the stator assembly lead and pulser coil assembly lead behind the wiring harness and the blowby hose.
D Fasten the wiring harness and collar of the intake silencer with a plastic tie as shown.
E Push in the joint connector 1 completely to the bracket.
F Pass the stator assembly lead through the bracket.
G Fasten the stator assembly lead and Rectifier Regulator ground lead with the holder and pass them through the grommet.
H Take care that both the starter relay ground lead and the Rectifier Regulator ground lead do not interfere with the bolts, and then pass their leads through the boss side of junction box as shown.
J Fasten the Rectifier Regulator lead coupler with the clamp in the junction box as shown.
K Pass the YDIS communication lead behind the Rectifier Regulator lead, and then pull out from the junction box.
L Pass both the YDIS communication lead and the Rectifier Regulator lead through the holder.
M Install the starter relay ground lead and Rectifier Regulator ground lead, making sure that the leads contact the stopper as shown. Direct and install the starter relay ground lead and the Rectifier Regulator ground lead as shown.
N Route the stator assembly lead behind the wiring harness.
P Install the wiring harness ground lead, making sure that it contacts the stopper as shown.
Q Insert the ECM coupler into position until it clicks.
R Fasten the wiring harness, wiring harness ground leads, stator assembly lead and pulser coil assembly lead with a plastic tie.
S Pass the wiring harness ground leads, stator assembly lead and pulser coil assembly lead through the bracket.
T Connect the magnet switch lead (R) to the magnet switch, and then fasten the magnet switch lead (R) with the clamp, and then cut off the clamp end.
U Pass the starter motor lead (Br/W) between the junction box and crankcase, pull into the junction box, and then connect the lead to the starter relay. Install the starter motor lead (Br/W) at the same angle as the starter relay, and then tighten to the specified torque.
V Pass the wiring harness between the junction box and crankcase, and then pull out the harness from the junction box.
W Install and fasten the wiring harness to the junction box with a plastic tie.
X Install the starter relay lead (R) at the same angle as the starter relay.
Y Engage the concave part of grommet, being connected to the magnet switch lead (R), with the convex part of junction box. Pull out the magnet switch lead (R) from the junction box, and then connect the lead to the magnet switch.

Aft view

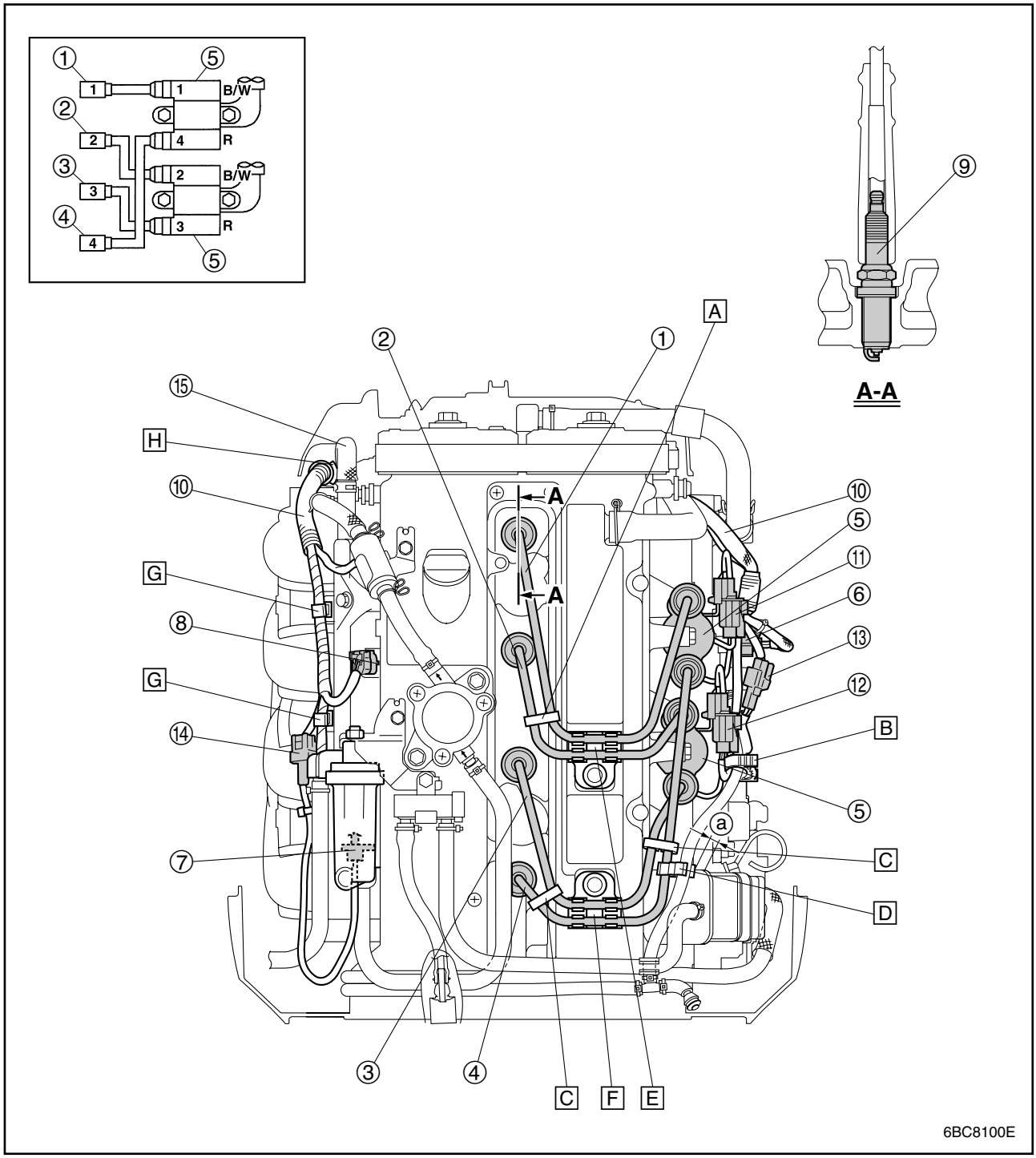

① Spark plug wire #1
② Spark plug wire #2
③ Spark plug wire #3
④ Spark plug wire #4
⑤ Ignition coil
⑥ Cooling water temperature sensor
⑦ Water detection switch (in the fuel filter assembly)
⑧ Fuel injector
⑨ Spark plug
⑩ Wiring harness
⑪ Ignition coil coupler (#1, #4)
⑫ Ignition coil coupler (#2, #3)
⑬ Hour meter coupler
⑭ Water detection switch coupler
⑮ High-pressure fuel hose.

A Fasten the spark plug wires #1 and #2 with the holder. These spark plug wires must not interfere with each other.
B Fasten the wiring harness (to ignition coil) and cooling water hose with the clamp.
C Fasten the spark plug wires #3 and #4 with the holder. These spark plug wires must not interfere with each other.
D Fasten the cooling water hose and spark plug wire #4 with the holder, making sure to align the holder with the mark on the hose. Separate the holder from the canister to have distance ⓐ (10 mm or more).
E Fasten the spark plug wires #1 and #2 with the holder, and then install them to the cylinder head cover.
F Fasten the spark plug wires #3 and #4 with the holder, and then install them to the cylinder head cover.
G Fasten the wiring harness with the clamp onto the fuel rail.
H Fasten the high-pressure fuel hose and wiring harness with the clamp. Be sure to fasten the wiring harness at the small diameter position of the clamp. The clamp opening must face downward.

Top view

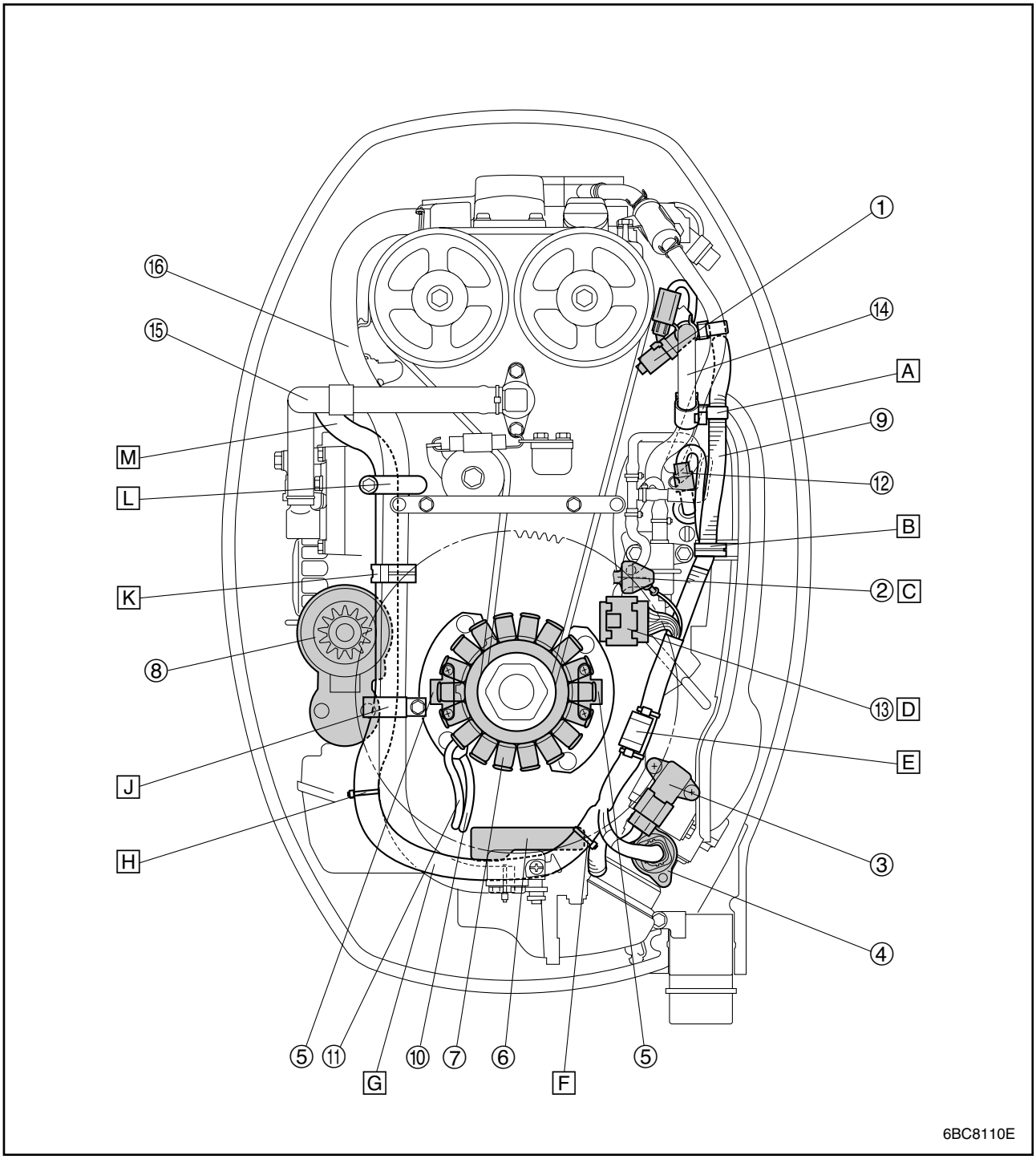

① Fuel injector
② Oil pressure switch
③ Sensor assembly
④ ISC
⑤ Pulser coil assembly
⑥ ECM
⑦ Stator assembly
⑧ Starter motor
⑨ Wiring harness
⑩ Pulser coil assembly lead
⑪ Stator assembly lead
⑫ High-pressure fuel pump coupler
⑬ Joint connector 2
⑭ High-pressure fuel hose
⑮ Cooling water hose
⑯ Blowby hose

A Fasten the high-pressure fuel hose and wiring harness with the clamp. Be sure to fasten the wiring harness at the small diameter position of the clamp. The clamp opening must face downward.
B Fasten the clamp of the intake manifold assembly with the white tape portion on the wiring harness.
C Screw in the oil pressure switch until 2 threads are engaged, then apply LOCTITE 572 to the exposed switch threads, and then tighten the switch to the specified torque.
D Push in the joint connector 2 completely to the bracket.
E Push in the wiring harness clamp completely to the bracket.
F Fasten the wiring harness and collar of the intake silencer with a plastic tie.
G Route the wiring harness to the outside of the blowby hose.
H Fasten the wiring harness with the clamp onto the bracket.
J Pass the wiring harness through the holder so that the harness passes outside of the blowby hose.
K Install the clamp between the boss and the starter motor. Then, fasten the wiring harness and the blowby hose with the clamp.
L Pass the wiring harness through the holder so that the harness passes outside of the blowby hose.
M Route the wiring harness behind the cooling water hose.

Bottom cowling

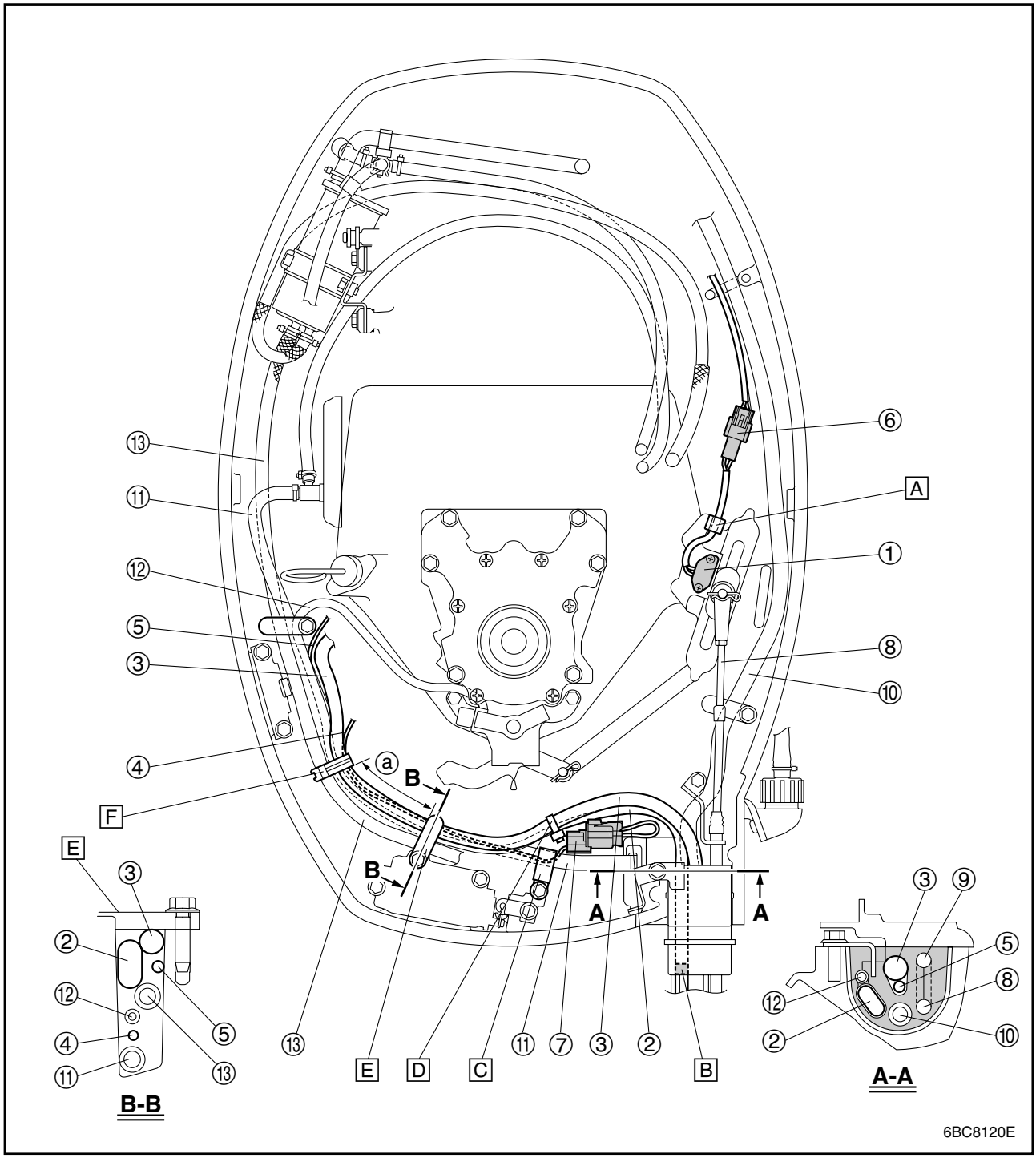

① Shift position switch
② Battery cable
③ 10-pin main harness
④ YDIS communication lead
⑤ Warning indicator lead (to tiller handle/ tachometer)
⑥ Shift position switch coupler
⑦ YDIS communication coupler
⑧ Shift cable
⑨ Throttle cable
⑩ Fuel hose
⑪ Flushing hose
⑫ Speedometer hose
⑬ Canister hose

A Pass the shift position switch lead through the clamp.
B Align the white tape end of the battery cable through the grommet end.
C Pass the flushing hose and YDIS communication lead through the holder.
D A plastic tie is for tiller handle models. See “Tiller handle (tiller handle model)” (8-13).
E Pass the battery cable, 10-pin main harness, YDIS communication lead, warning indicator lead, flushing hose, speedometer hose and canister hose through the plate.
F Bundle the battery cable, 10-pin main harness, YDIS communication lead, warning indicator lead, flushing hose, speedometer hose and canister hose at the position 50 to 80 mm (distance ⓐ) away from the plate with the clamp.

Tiller handle (tiller handle model)

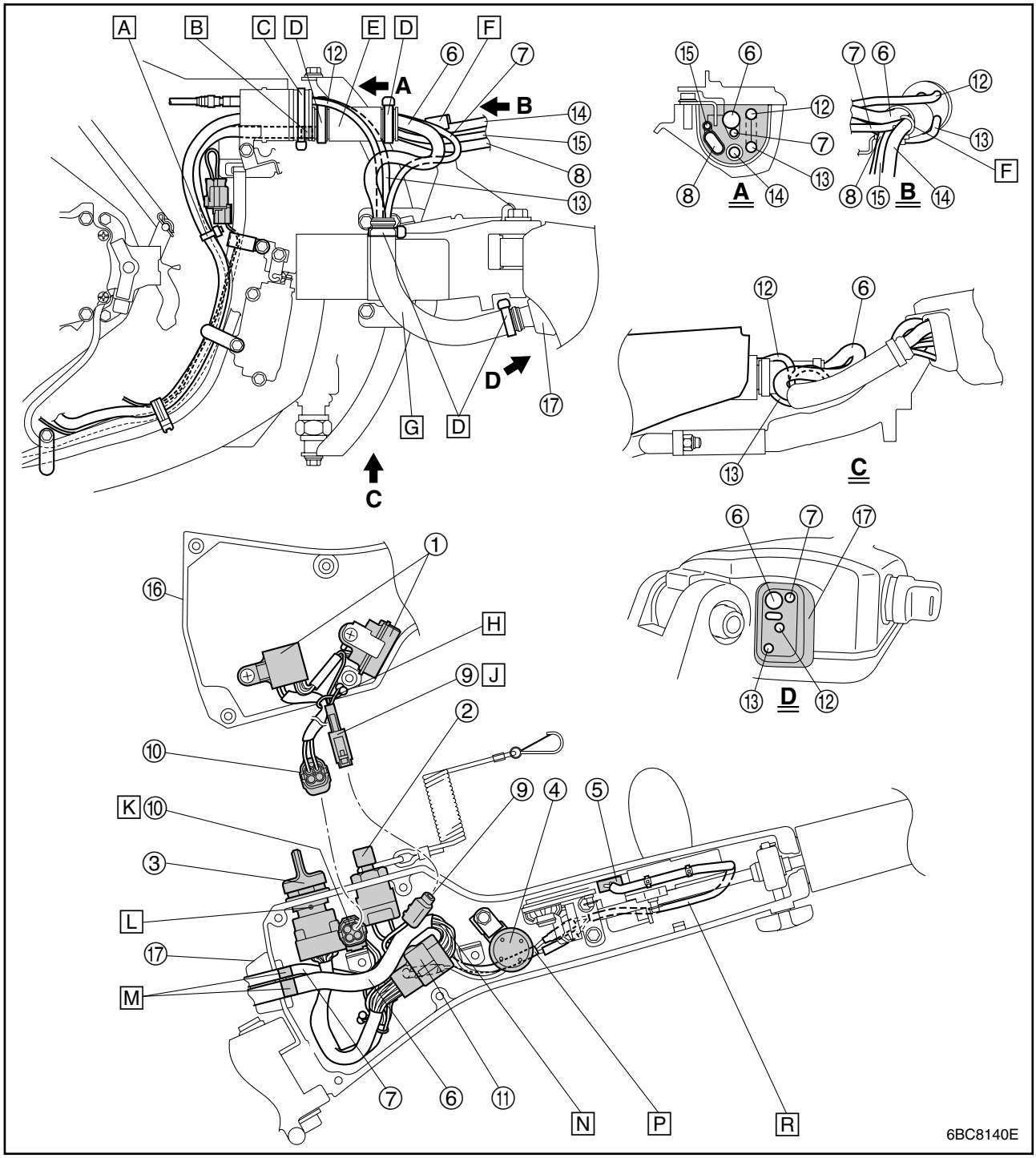

① Warning indicator assembly
② Engine stop lanyard switch
③ Engine start switch
④ Buzzer
⑤ Neutral switch
⑥ 10 pin-main harness
⑦ Warning indicator lead
⑧ Battery cable
⑨ Warning indicator coupler (1 pin)
⑩ Warning indicator coupler (4 pins)
⑪ Engine start switch coupler
⑫ Throttle cable
⑬ Shift cable
⑭ Fuel hose
⑮ Speedometer hose
⑯ Tiller handle cover
⑰ Grommet

A Bundle the 10-pin main harness and the battery cable together with a plastic tie.
B Align the white tape end of the battery cable with the grommet end.
C Fasten the grommet end with a plastic tie.
D Fasten the corrugate tube end with a plastic tie, and then cut off its excess.
E Pass the 10-pin main harness, warning indicator lead, battery cable, fuel hose and speedometer hose through the corrugate tube.
F Pass the fuel hose through the hose holder.
G Pass the 10-pin main harness, warning indicator lead, throttle cable and shift cable through the corrugate tube.
H Fasten the warning indicator leads with the clamp.
J Hold the warning indicator coupler (1 pin) in vertical direction, and then insert the coupler into the bottom of bracket.
K Insert the warning indicator coupler (4 pins) into the bracket.
L Install the engine start switch by facing the hole of this switch to the direction as shown.
M Align the tape ends of 10-pin main harness and warning indicator lead with the grommet end.
N Temporarily fold up the 10-pin main harness and connect the harness to the engine start switch coupler. This harness folding position must be 10 mm or more away from the engine start switch coupler. Fold up the harness so that the harness bending circle has the 10-mm or larger radius.
P Pass the neutral switch leads (Br) under the buzzer.
R Pass the neutral switch leads (L) and (B) under the throttle/shift link assembly as shown.

Checking the electrical component

Checking using the YDIS

When checking the ISC, fuel injector or each sensor, use the YDIS.

When deleting the diagnosis record in the YDIS, be sure to check the time that the trouble codes were detected.

When checking the input voltage of a part, the coupler or connector must be disconnected. As a result, the ECM determines that the part is disconnected and a trouble code is detected. Therefore, be sure to delete the diagnosis record after checking the input voltage.

NOTE:

- Before checking the electrical components, make sure that the battery is fully charged.
- The YDIS requires that you use an exclusive communication cable and CD-ROM to connect to a computer. For a description of the communication cable and CD-ROM to be used, see "YDIS" (9-1). Also, be sure to check the CD-ROM version before using it.
- To connect the YDIS, see "YDIS" (9-1) or the YDIS (Ver. 1.23a or later) Instruction Manual.

YDIS (connecting kit):
60V-85300-02-00
YDIS (CD-ROM, Ver. 1.23a):
60V-WS853-03

Measuring the peak voltage

To check the electrical components or measure the peak voltage, use the special service tools. A faulty electrical component can be easily checked by measuring the peak voltage. The specified engine speed when measuring the peak voltage is affected by many factors, such as fouled spark plugs or a weak battery. If one of these factors is present, the peak voltage cannot be measured properly.

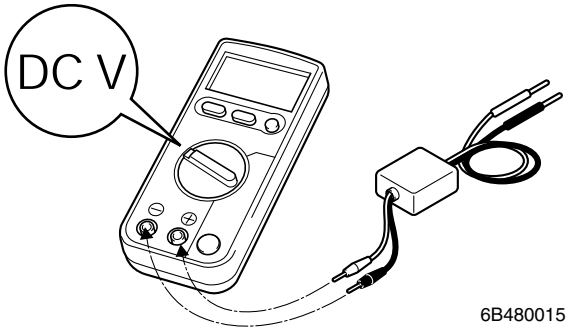

WARNING

When checking the peak voltage, do not touch any of the connections of the digital tester leads.

CAUTION:

When testing the voltage between the terminals of an electrical component with the digital tester, do not allow any of the leads to touch any metal parts. If touched, the electrical component can short and be damaged.

NOTE:

- Before measuring the peak voltage, check all wiring for proper connections and corrosion, and check that the battery is fully charged.
- Use peak voltage adapter B with the recommended digital circuit tester.
- Connect the positive pin of peak voltage adapter B to the positive terminal of the digital tester, and the negative pin to the negative terminal.
- When measuring the peak voltage, set the selector on the digital circuit tester to the **DC voltage mode**.

Digital circuit tester: 90890-03174
Peak voltage adapter B:
90890-03172

Starter motor

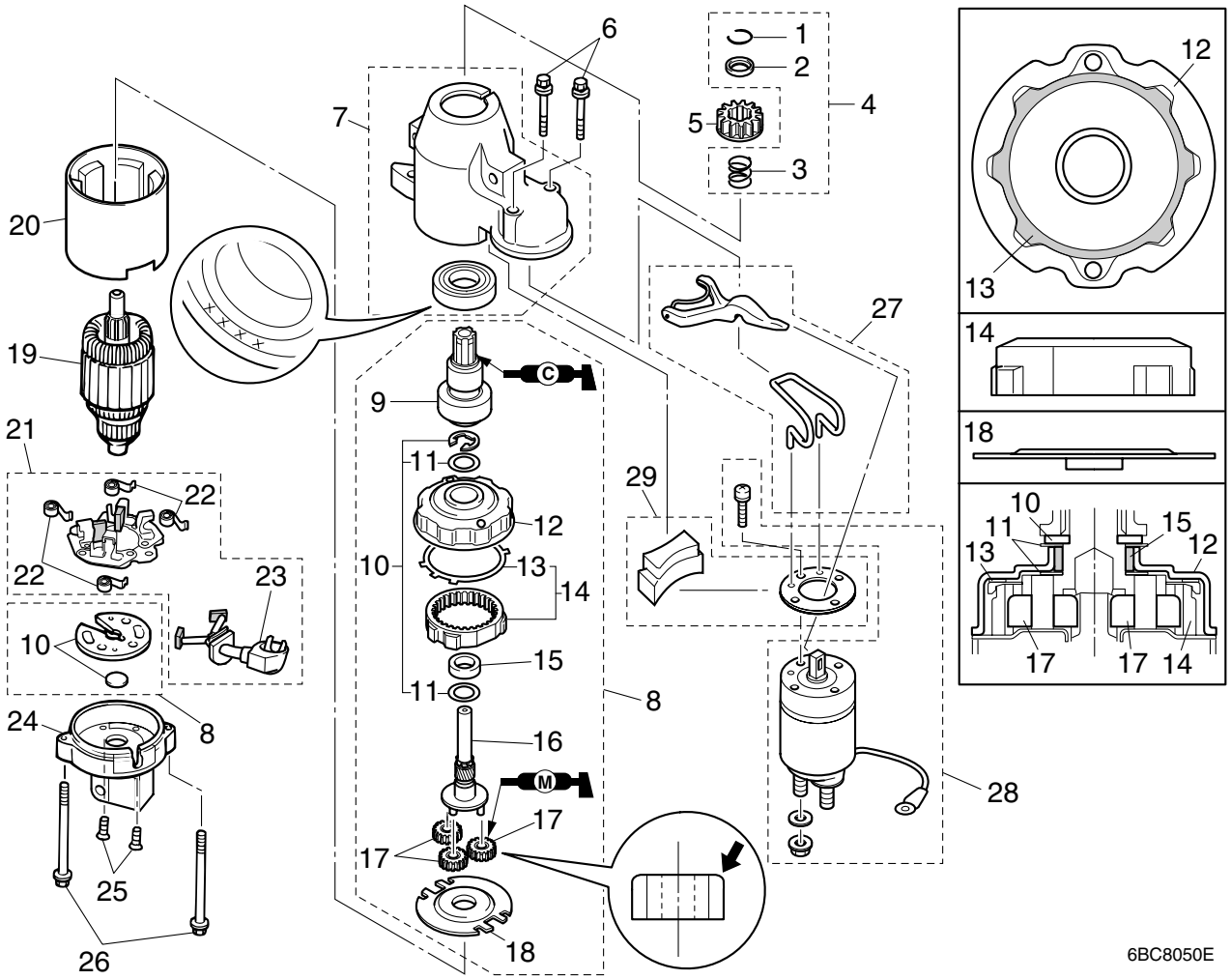

No.	Part name	Q'ty	Remarks
1	Clip	1	
2	Pinion stopper	1	
3	Spring	1	
4	Pinion stopper set	1	
5	Starter pinion	1	
6	Bolt	2	M6 × 50 mm
7	Cover assembly	1	
8	Starter motor gear assembly	1	
9	Clutch assembly	1	
10	Washer set	1	
11	Washer	–	
12	Bracket	1	
13	Gasket	1	Not reusable
14	Outer gear	1	
15	Bearing	1	
16	Pinion shaft	1	
17	Planetary gear	3	

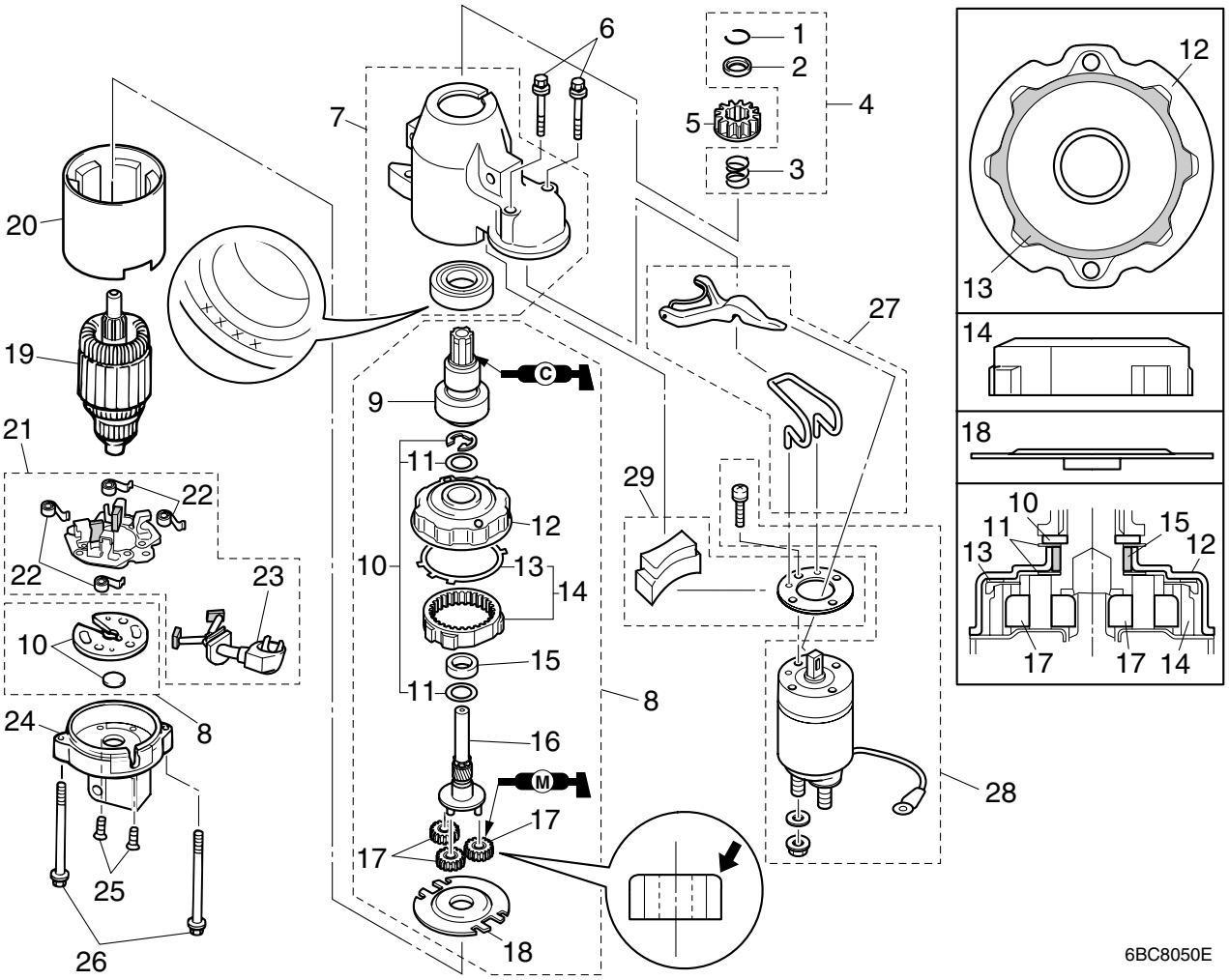

No.	Part name	Q'ty	Remarks
18	Plate	1	
19	Armature	1	
20	Stator	1	
21	Brush holder assembly	1	
22	Brush spring	4	
23	Brush assembly	1	
24	Bracket	1	
25	Screw	2	ø4 × 15 mm
26	Bolt	2	M6 × 120 mm
27	Lever assembly	1	
28	Magnet switch assembly	1	
29	Dust cover	1	

Removing the starter motor

NOTE:
Check the fuse (30 A), engine start switch, neutral switch and starter relay, before checking the starter motor.

1. Remove the starter motor from the power unit.

NOTE:
To remove the starter motor, see the exploded diagram (5-5).

Checking the starter motor operation

NOTE:
- If the starter motor is disassembled for maintenance, be sure to check the operation again after assembling it.
- Before checking the starter motor operation, check the battery is fully charged.

1. Hold the starter motor in a vise using aluminum plates on both sides.

2. Connect the positive battery cable ① to the magnet switch terminal ②, and then connect the negative battery cable ③ to the starter motor body as shown.

3. Connect the starter motor lead (Br/W) ④ to the positive battery terminal, and then check that the pinion comes out and rotates.

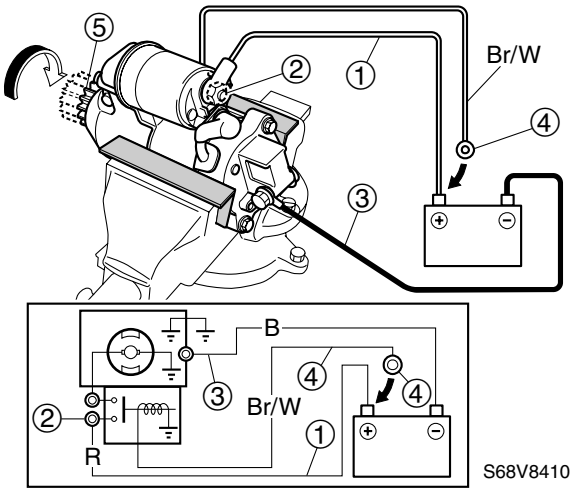

⚠WARNING

Do not place any objects near the pinion ⑤ or touch it. The pinion ⑤ moves slightly away from the starter motor body and rotates at high speed.

NOTE:
Check the starter motor operation for a few seconds.

4. Disconnect the negative battery cable ③ and positive battery cable ① from the battery terminals.

8

Checking the magnet switch

1. Connect the negative battery cable ① to the starter motor body.

2. Connect the tester leads between the magnet switch terminals ② and ③ as shown.

3. Connect the starter motor lead (Br/W) ④ to the positive battery terminal, and then check that there is continuity. Disconnect the starter motor lead (Br/W) ④ from the positive battery terminal, and then check that there is no continuity. Replace the magnet switch if out of specification.

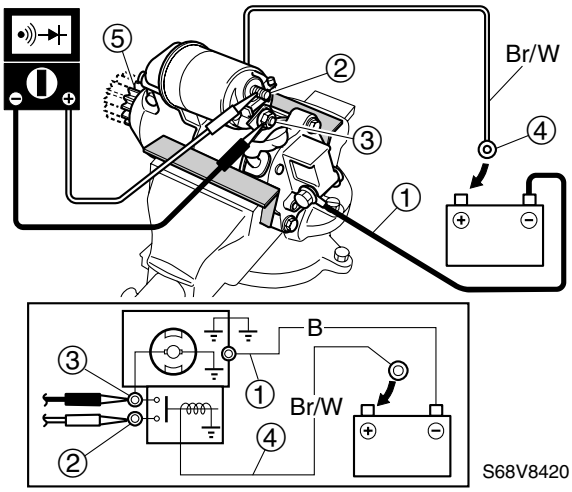

CAUTION:

Do not connect the starter motor lead (Br/W) to the battery for more than 1 second, otherwise the magnet switch can be damaged.

NOTE:

The pinion ⑤ moves away from the starter body as shown while the magnet switch is "ON."

Magnet switch continuity: Terminal ② – Terminal ③	
Starter motor lead (Br/W)	Continuity
Connected	Yes
Disconnected	No

4. Disconnect the tester leads and negative battery cable ① from the battery terminal.

Checking the starter motor pinion

WARNING

Be sure to disconnect the battery cables from the battery before checking the pinion.

1. Check the pinion teeth. Replace the pinion if cracked or worn.

2. Check the pinion for operation.

NOTE:

Turn the pinion counterclockwise to check that it rotates smoothly and turn it clockwise to check that it comes out but does not rotate.

Disassembling the starter motor

1. Hold the starter motor in a vise using aluminum plates as shown.

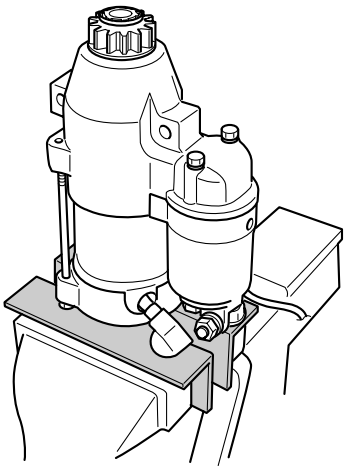

2. Remove the clip ①, and then remove the pinion stopper ②, pinion ③ and spring ④.

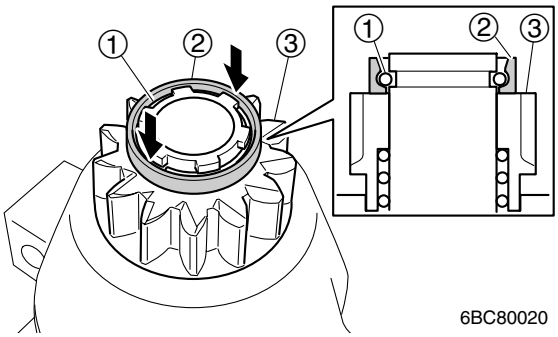

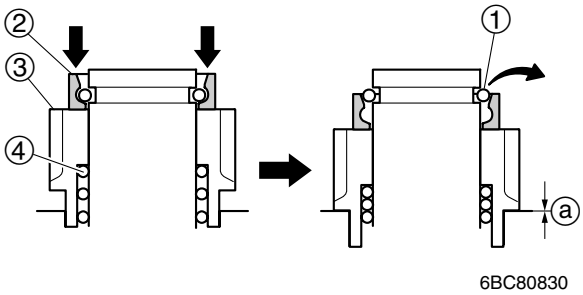

NOTE:

- Push down the pinion stopper ② and pinion ③ equally until the position ⓐ shown, when removing the clip ①.
- Remove the clip ① with a screwdriver.

3. Remove the bolts ⑤, and then disassemble the starter motor body.

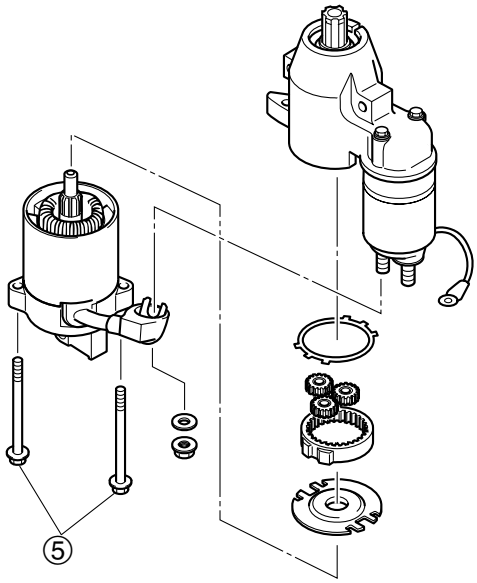

NOTE:

Be sure to keep the parts in the direction and position as they were removed.

4. Remove the stator ⑥, and then remove the screws ⑦ and armature ⑧ with the brush holder assembly ⑨ from the bracket ⑩.

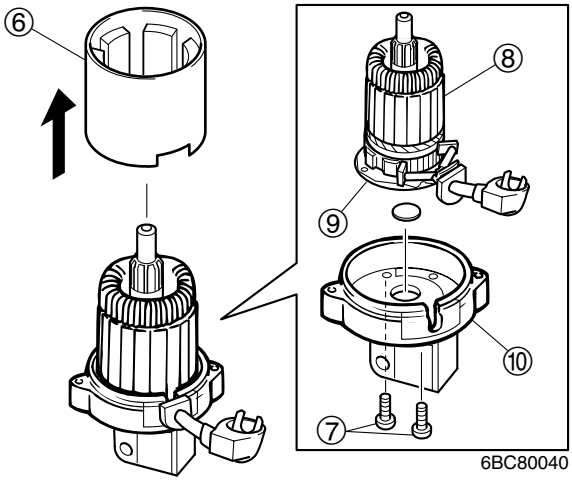

8

5. Remove the plate ⑪, and then remove the armature ⑧ from the brush holder assembly ⑨.

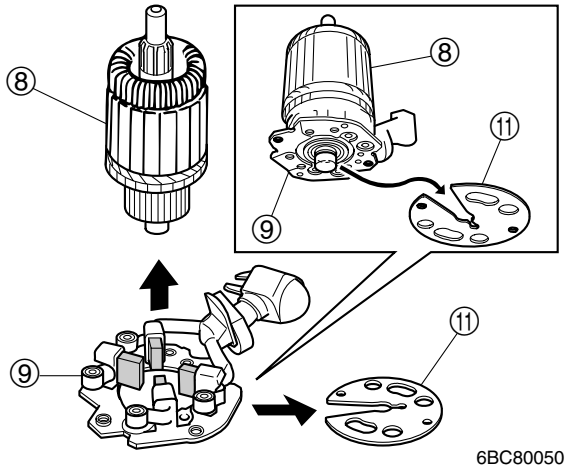

CAUTION:

Do not scratch or damage the brushes when removing the armature ⑧.

6. Remove the bolts ⑫, and then remove the magnet switch assembly ⑬, spring ⑭ and dust cover ⑮.

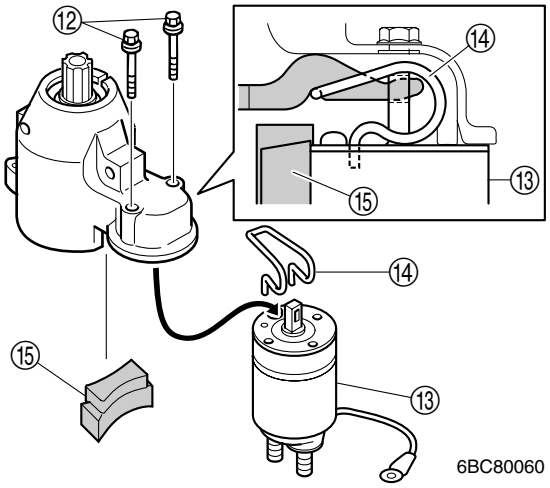

7. Remove the shift lever ⑯ and pinion shaft assembly ⑰.

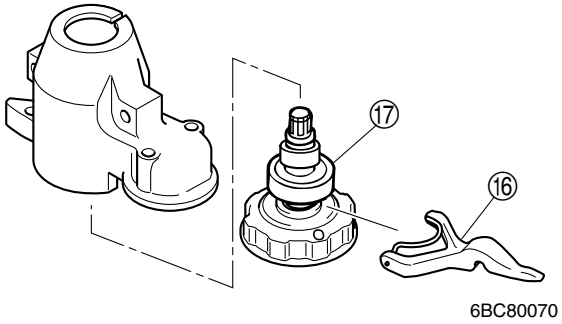

8. Remove the clutch assembly ⑱, and then remove the E-clip ⑲ from the pinion shaft ⑳.

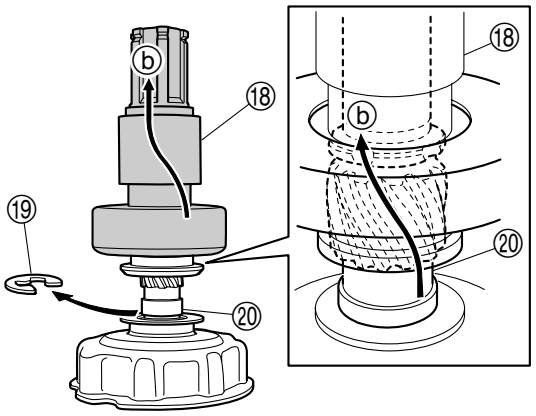

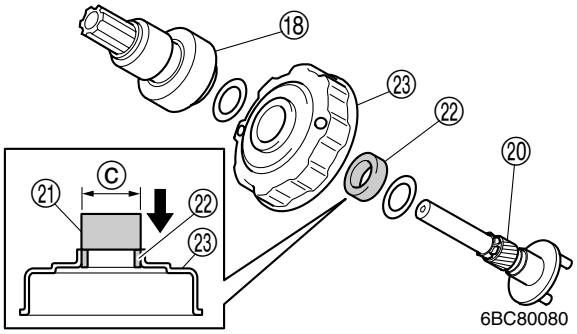

NOTE:

- Remove the clutch assembly ⑱ in the direction shown ⓑ.
- Use a solid cylinder ㉑ with an outer diameter ⓒ of 21.5 mm (0.85 in) to remove the bearing ㉒ from the bracket ㉓.

Checking the armature

1. Check the commutator. Clean with 600-grit sandpaper and compressed air if dirty.

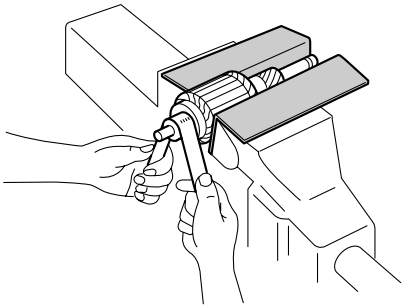

S6AG8440

2. Measure the commutator diameter ⓐ. Replace if below specification.

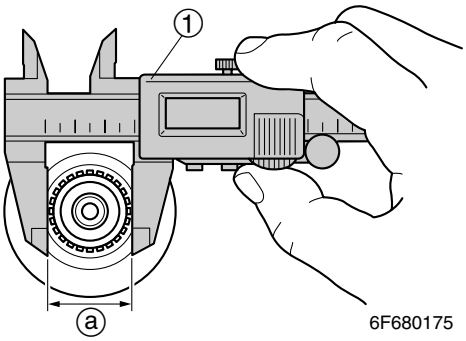

6F680175

	Digital caliper ①: 90890-06704

	Standard diameter ⓐ: 29.0 mm (1.14 in) Wear limit: 28.0 mm (1.10 in)

3. Measure the commutator undercut ⓑ. Replace if below specification.

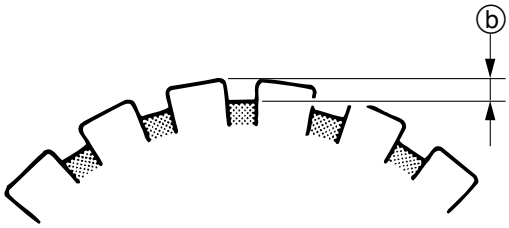

6F680180

	Standard undercut ⓑ: 0.8 mm (0.03 in) Wear limit: 0.2 mm (0.01 in)

4. Check the armature for continuity. Replace if out of specification.

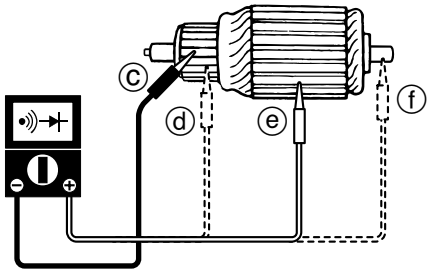

S68V7610

	Armature continuity

Checking points	Continuity
Commutator segments ⓒ – ⓓ	Yes
Segment ⓒ – Armature core ⓔ	No
Segment ⓒ – Armature shaft ⓕ	

8

Checking the brush holder and brush

1. Check the brush holder assembly for continuity. Replace if out of specification.

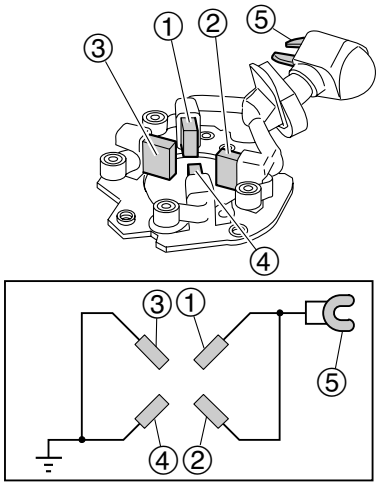

Brush holder assembly continuity	
Checking points	Continuity
Brush ① – Brush ②	Yes
Brush ① – Terminal ⑤	
Brush ② – Terminal ⑤	
Brush ③ – Brush ④	
For all brush and terminal combinations not listed above.	No

2. Measure the length of each brush. Replace the brush assembly or brush holder assembly if below specification.

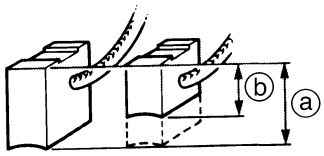

Standard length ⓐ:
15.5 mm (0.61 in)
Wear limit ⓑ:
9.5 mm (0.37 in)

Assembling the starter motor

CAUTION:

Do not allow grease or oil to contact the commutator of the armature.

1. Install the washer ①, bracket ②, washer ③ and E-clip ④ onto the pinion shaft ⑤, and then install the clutch assembly ⑥.

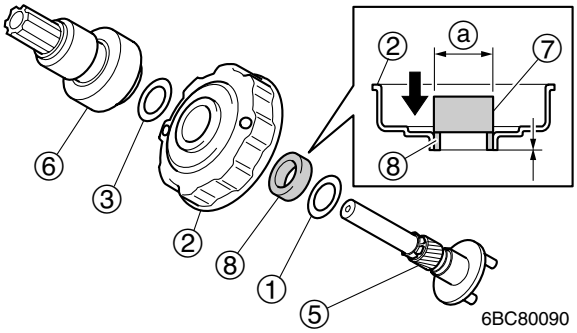

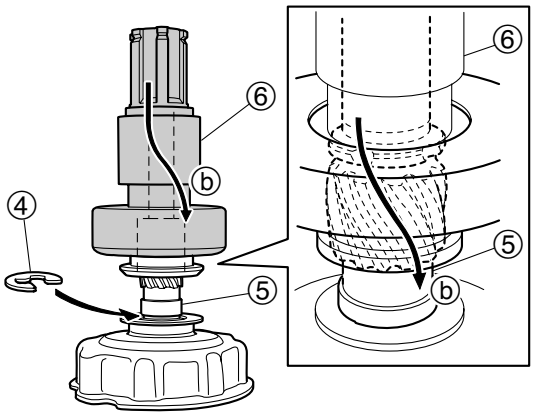

NOTE:

- Use a solid cylinder ⑦ with an outer diameter ⓐ of 21.5 mm (0.85 in) to install the bearing ⑧.
- Install the clutch assembly ⑥ in direction ⓑ shown.

2. Install the pinion shaft assembly ⑨ and shift lever ⑩ into the cover assembly ⑪ in the position shown.

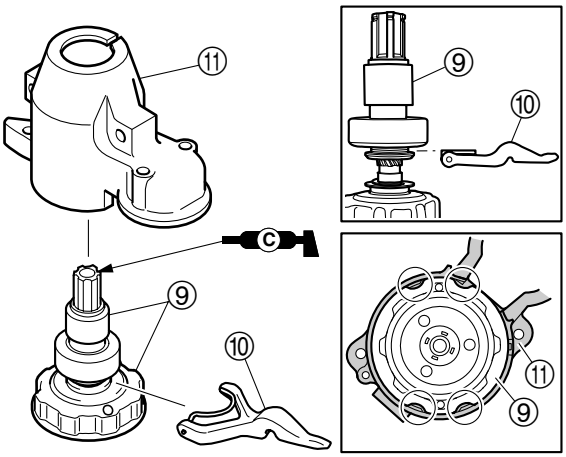

S68V8530

NOTE:
Install the pinion shaft assembly ⑨ into the cover assembly ⑪ in the position shown.

3. Install the dust cover ⑫, spring ⑬ and magnet switch assembly ⑭, and then tighten the bolts ⑮.

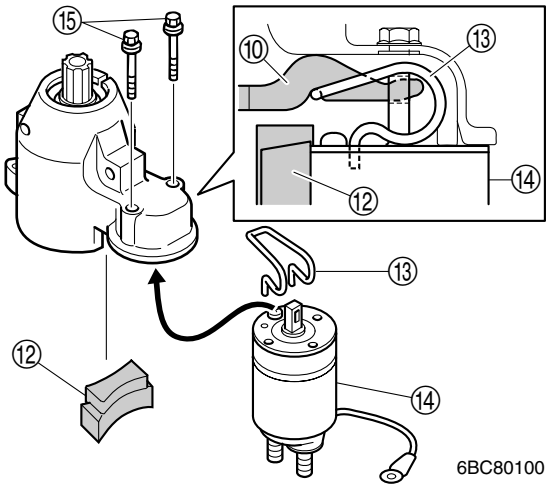

6BC80100

4. Install the armature ⑯ to the brush holder assembly, and then install the plate ⑰.

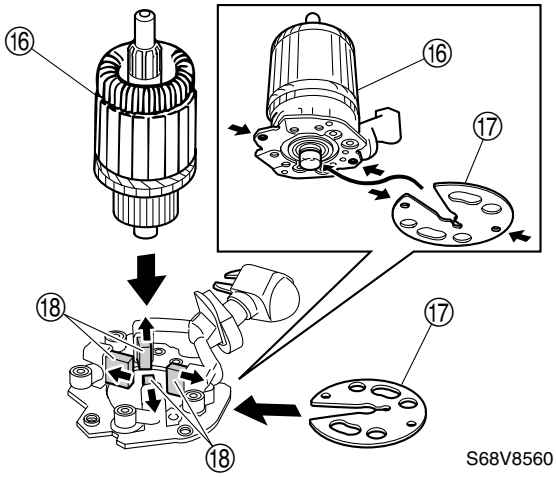

S68V8560

CAUTION:
Do not scratch or damage the brushes ⑱ when installing the armature ⑯.

NOTE:
- Push the brushes ⑱ into the holders as shown.
- Align the holes in the brush holder assembly with the holes in the plate ⑰.

5. Install the thrust washer ⑲ and armature with the brush holder assembly ⑳ to the bracket ㉑, and then tighten the screws ㉒.

6. Install the stator ㉓.

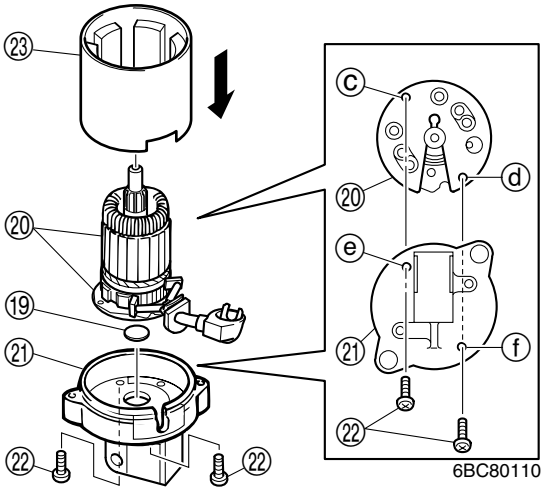

6BC80110

NOTE:
Align the holes ⓒ and ⓓ in the plate with the holes ⓔ and ⓕ in the bracket ㉑.

8

7. Install the new gasket ㉔, outer gear ㉕, planetary gears ㉖ and plate ㉗ to the pinion shaft assembly.

8. Install the stator assembly ㉘, and then tighten the bolts ㉙.

9. Install the brush lead ㉚ to the magnet switch terminal, and then tighten the nut ㉛.

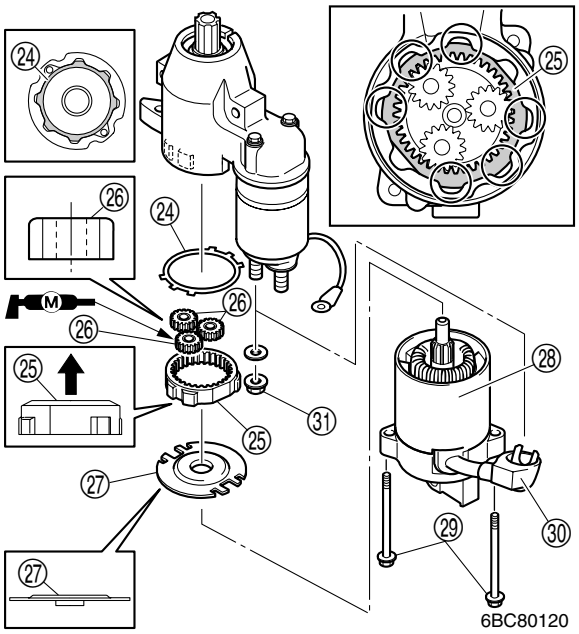

NOTE:
- Install a new gasket ㉔ to the pinion shaft assembly in the position shown.
- Install each planetary gear ㉖ with its rounded side in the direction shown.
- Install the outer gear ㉕ and plate ㉗ in the direction shown.

10. Install the spring ㉜, pinion ㉝ and pinion stopper ㉞, and then install the clip ㉟.

NOTE:
Push down the pinion stopper ㉞ and pinion ㉝ equally until the position ⓖ shown, when installing the clip ㉟.

11. Pull up the pinion stopper ㉞ until the clip ㉟ is installing the groove of the pinion stopper ㉞.

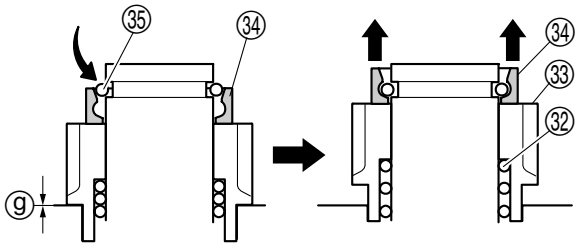

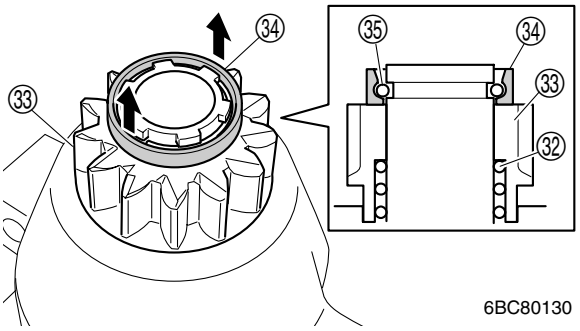

NOTE:
- Pull up the pinion stopper equally.
- After assembling the starter motor, check the starter motor operation, see “Checking the starter motor operation” (8-18).

Installing the starter motor

NOTE:

To route the wiring harness, leads and battery cables, see “Electrical component and wiring harness routing” (8-3).

1. Install the starter motor ① to the power unit, and then tighten the starter motor bolts ② to the specified torque.

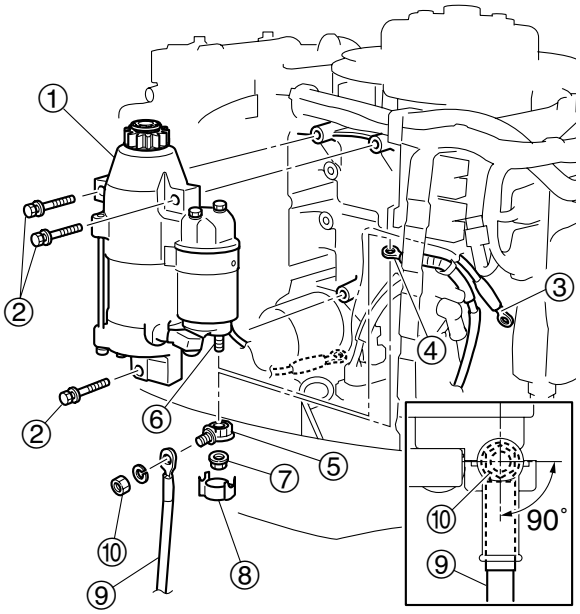

6BC80135

NOTE:

Route the starter motor lead (Br/W) ③ between the junction box and crankcase towards the starter relay.

	Starter motor bolt ②: 29 N·m (2.9 kgf·m, 21.4 ft·lb)

2. Install the magnet switch lead (R) ④ and terminal ⑤ to the magnet switch terminal ⑥, and then tighten the terminal nut ⑦ to the specified torque. Then install the cap ⑧.

	Terminal nut ⑦: 9 N·m (0.9 kgf·m, 6.6 ft·lb)

3. Connect the positive battery cable ⑨ to the terminal ⑤, and then tighten the terminal nut ⑩ to the specified torque.

NOTE:

Connect the positive battery cable ⑨ to the terminal vertically to prevent the positive battery cable from contacting the starter motor body and other terminal.

	Terminal nut ⑩: 9 N·m (0.9 kgf·m, 6.6 ft·lb)

4. Connect the starter motor lead (Br/W) ③ to the starter relay ⑪, and then tighten the starter relay terminal bolt ⑫ to the specified torque.

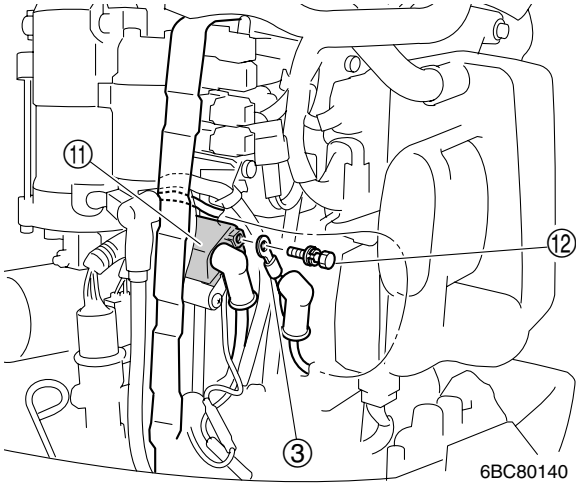

6BC80140

	Starter relay terminal bolt ⑫: 4 N·m (0.4 kgf·m, 3.0 ft·lb)

5. Install the junction box cover and flywheel magnet cover.

Starting system

Checking the engine start switch

1. Disconnect the 10-pin main harness coupler.

2. Measure the input voltage at the 10-pin main harness coupler (outboard motor end). Check the fuse and wiring harness if below specification.

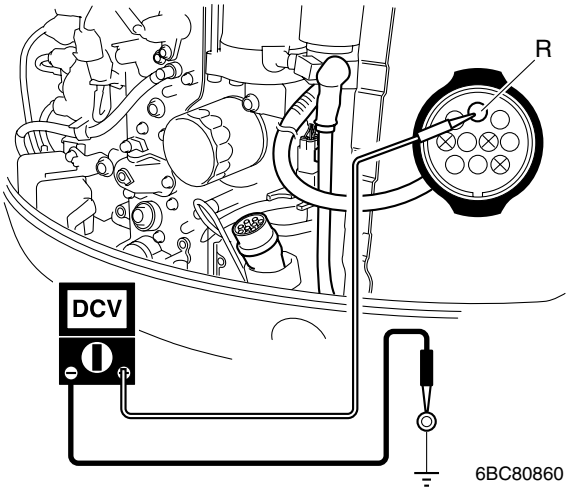

Engine start switch input voltage:
Red (R) – Ground
12 V (battery voltage)

3. Set the gear shift to the “N” position.

4. Check the engine start switch for continuity at the 10-pin main harness coupler. Check the engine stop lanyard switch, neutral switch and wiring harness or replace the engine start switch if out of specification.

A

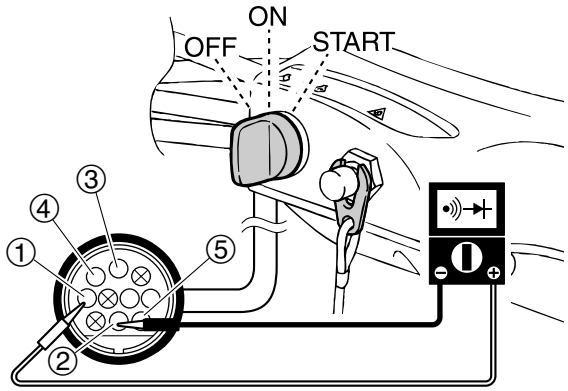

B

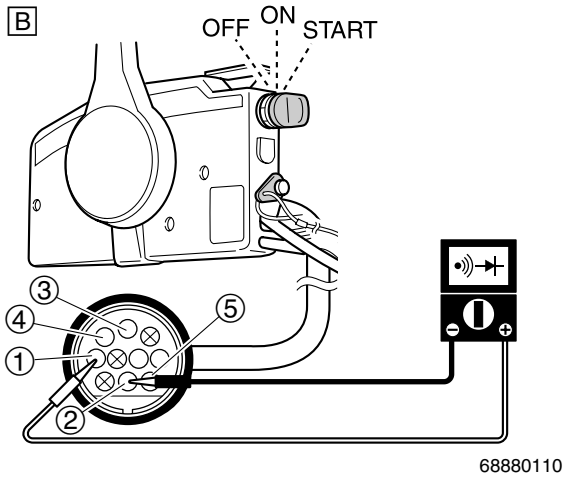

A Tiller handle model
B Remote control model

NOTE:
Check for continuity when the clip is installed to the engine stop lanyard switch.

Engine start switch continuity:					
Switch position	Lead color				
	White (W) ①	Black (B) ②	Red (R) ③	Yellow (Y) ④	Brown (Br) ⑤
OFF	○——	——○			
ON			○——	——○	
START			○——	——○	——○

5. Connect the 10-pin main harness coupler.

Checking the neutral switch

NOTE:

- To remove the tiller handle cover, shift cable and throttle cable from the tiller handle, see “Disassembling the tiller handle” (7-6). (tiller handle model)
- To disassemble the remote control box, see “Remote control box operation manual” bundle the remote control box. (Remote control model)

1. Disconnect the neutral switch lead connectors (Br) ① and (Br) ②.

2. Turn the engine start switch to “START”, and then measure the input voltage at the neutral switch connectors (wiring harness end). Check the engine start switch ③ and wiring harness if below specification.

A

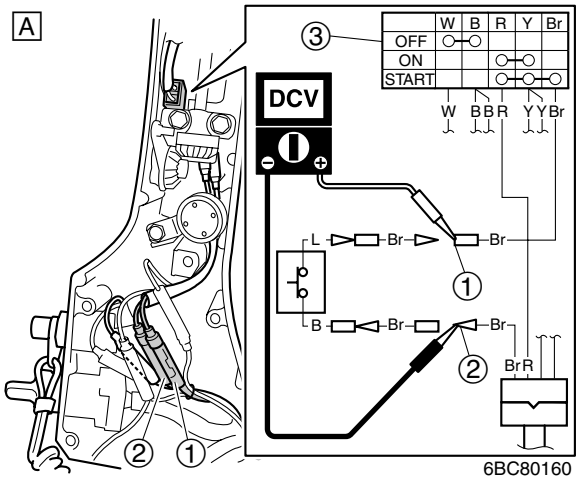

B

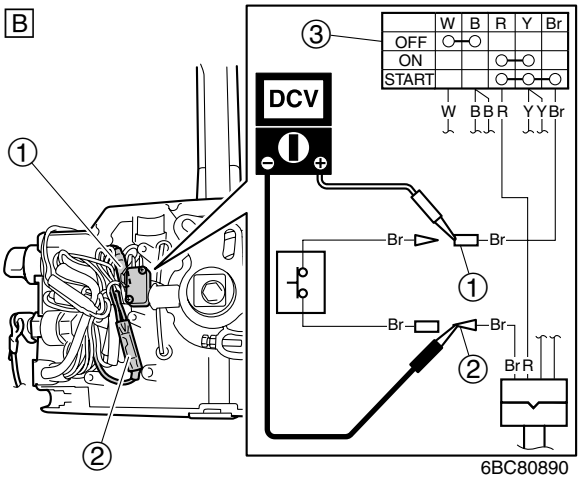

A Tiller handle model
B Remote control model

Neutral switch input voltage: Brown (Br) ① – Brown (Br) ② 12 V (battery voltage)

3. Turn the engine start switch to “OFF”.

8

4. Check the neutral switch ④ for continuity at the neutral switch connectors (neutral switch end). Replace if out of specification.

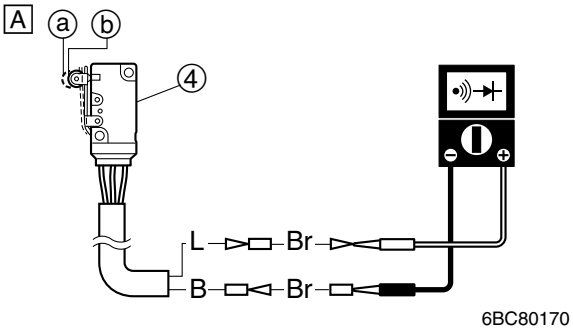

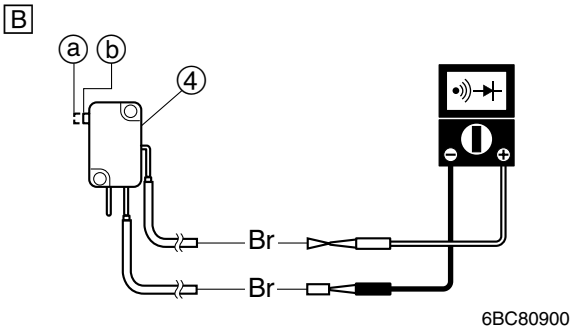

A Tiller handle model
B Remote control model

Neutral switch continuity: Brown (Br) – Brown (Br)	
Switch position	Continuity
Free ⓐ (“F” or “R”)	No
Pushed ⓑ (“N”)	Yes

5. Connect the neutral switch lead connectors (Br).

NOTE:

- To install the throttle cable, shift cable and tiller handle cover to the tiller handle, see “Assembling the tiller handle” (7-7). (tiller handle model)
- To assemble the remote control box, see “Remote control box operation manual” bundle the remote control box. (Remote control model)
- To adjust the throttle cable or shift cable, see “Checking the throttle system” (3-9) or “Checking the gear shift system” (3-12).

Checking the starter relay

1. Disconnect the starter relay lead connector (Br) ①.

2. Set the gear shift to the “N” position.

3. Turn the engine start switch to “START,” and then measure the input voltage at the starter relay connector (wiring harness end). Check the engine start switch ②, neutral switch ③ and wiring harness if below specification.

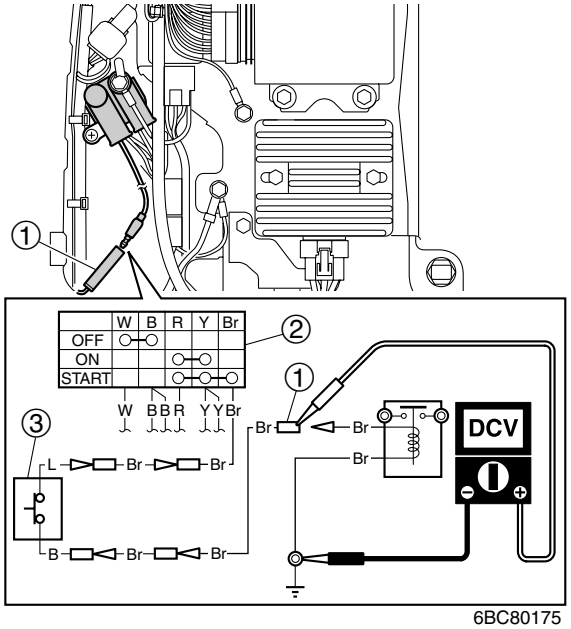

Starter relay input voltage: Brown ① – Ground 12 V (battery voltage)

4. Disconnect the ground lead (B), starter motor lead (Br/W) and starter relay lead (R), and then remove the starter relay ④.

5. Connect the tester leads to the starter relay terminals ⑤ and ⑥.

6. Connect the starter relay lead (Br) to the positive battery terminal, and then connect the ground lead (B) to the negative battery terminal. Check that there is continuity between the starter relay terminals. Replace if there is no continuity.

7. Disconnect the starter relay lead (Br) from the battery terminal. Check that there is no continuity between the starter relay terminals. Replace if there is continuity.

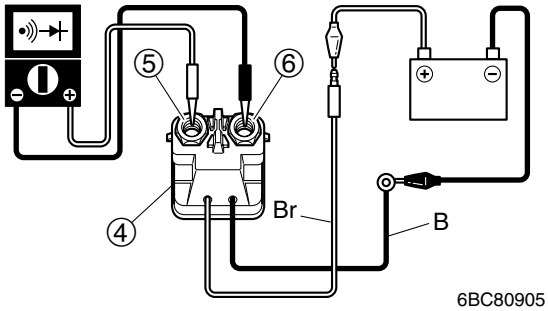

Starter relay continuity: Terminal ⑤ – Terminal ⑥	
Battery lead	Continuity
Connected	Yes
Disconnected	No

8. Install the starter relay, and then connect the starter relay lead (R), starter motor lead (Br/W), starter relay lead connector (Br) and ground lead (B).

NOTE:
To route and connect the wirings, see "Junction box" (5-18) and "Electrical component and wiring harness routing" (8-5).

Starter relay holder screw :
3 N·m (0.3 kgf·m, 2.2 ft·lb)
Starter relay terminal bolt :
4 N·m (0.4 kgf·m, 3.0 ft·lb)

Ignition and ignition control system

Checking the ignition spark

NOTE:
The ignition spark can also be checked using the "Stationary test" of the YDIS.

1. Disconnect the all fuel injector couplers.

NOTE:
To prevent the fuel from injecting into the cylinders when checking the ignition spark, be sure to disconnect all of the fuel injector couplers.

2. Remove the spark plug wire cover, and then disconnect the spark plug wires from the all spark plugs. Then remove the all spark plugs.

NOTE:
To checking the spark plug, see "Checking the spark plug" (3-7).

3. Connect a spark plug wire to the special service tool.

Ignition tester: 90890-06754

8

4. Crank the engine and check for a spark. Check the ignition system, if there is no spark.

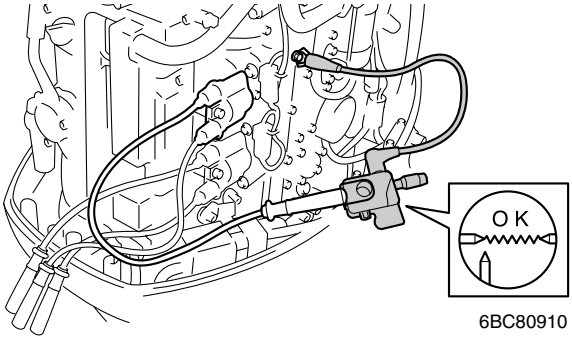

⚠WARNING

- **Do not touch any of the connections of the special service tool.**
- **Be sure to install the special service tool to the spark plug cap so that sparks do not leak out.**
- **Keep flammable gas or liquids away, since this test can produce sparks.**

NOTE:

- Check the ignition spark when the clip is installed to the engine stop lanyard switch.
- Repeat the steps 3–4 for each spark plug wire.

Checking the ignition coil and spark plug wire

1. Disconnect the ignition coil couplers ① and ②.

2. Turn the engine start switch to “ON”, and then measure the input voltage at the ignition coil coupler (wiring harness end). Check the wiring harness and main/high-pressure fuel pump relay if bellow specification.

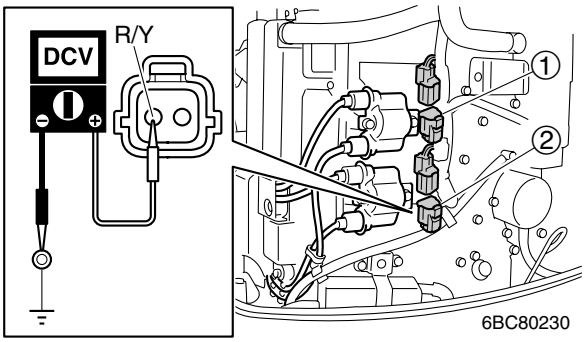

	Ignition coil input voltage: Red/yellow (R/Y) – Ground 12 V (battery voltage)

3. Turn the engine start switch to “OFF”.

4. Connect the test harness (2 pins) ③ to the ignition coil coupler.

5. Measure the ignition coil output peak voltage. Check the ignition coil resistance, pulser coil assembly and wiring harness if below specification.

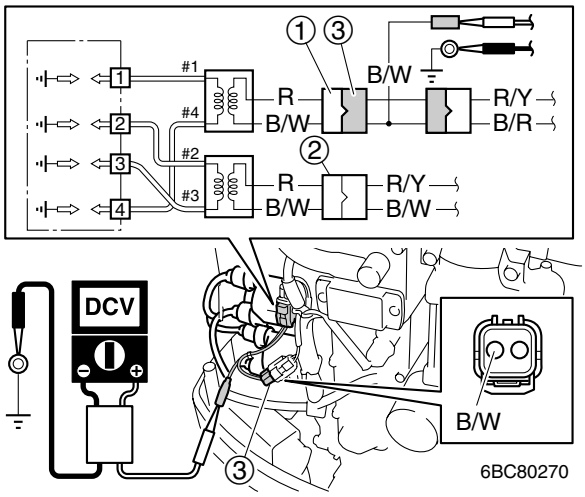

NOTE:

- To prevent the engine from starting when cranking it, be sure to disconnect all of the fuel injector couplers.
- Using the YDIS or the on-board tachometer to refer the engine speed.
- Replace the ECM if the ignition coils and pulser coil assembly are not malfunction, and then check the ignition coil output peak voltage again.

Test harness (2 pins) ③:
90890-06792
Peak voltage adapter B:
90890-03172

Ignition coil output peak voltage (reference data):
Black/white (B/W) – Ground

r/min	Loaded		
	Cranking	1,500	3,500
DC V	237	284	286

6. Disconnect the test harness (2 pins) ③.

7. Remove the ignition coil, and then disconnect the spark plug wires from the ignition coil.

NOTE:
Be sure to keep the spark plug wires in order of the number of cylinders (#1–#4).

8. Measure the ignition coil resistance. Replace if out of specification.

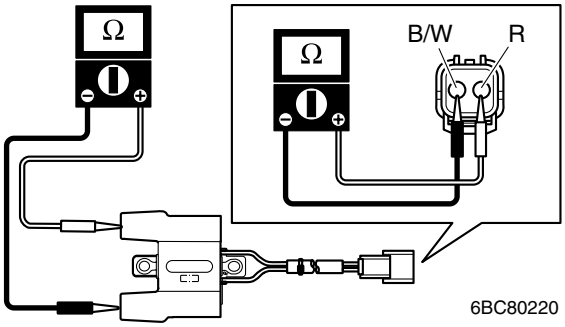

Ignition coil resistance:
Primary coil:
Red (R) – Black/white (B/W)
1.53–2.07 Ω at 20 °C (68 °F)
Secondary coil
(spark plug wire terminal):
12.5–16.9 kΩ at
20 °C (68 °F)

9. Measure the spark plug wire resistance. Replace if out of specification.

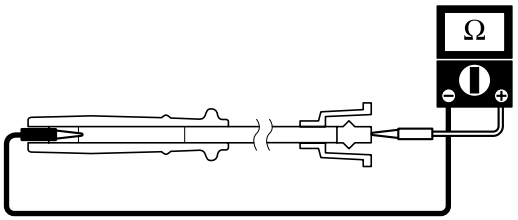

Spark plug wire resistance:
#1: 4.5–10.7 kΩ
#2: 3.3–8.0 kΩ
#3: 3.7–8.9 kΩ
#4: 4.3–10.2 kΩ

10. Connect the spark plug wires to the ignition coil.

NOTE:
Connect the spark plug wires to the original position.

11. Install the ignition coil, and then connect the ignition coil coupler and spark plug wires.

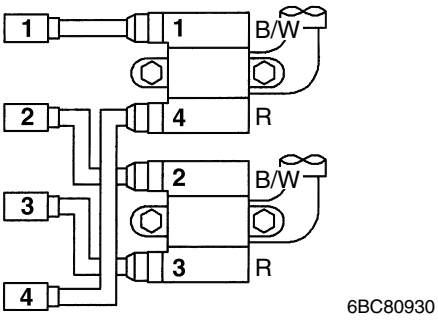

NOTE:
Connect the spark plug wires to the spark plug in the proper order.

8

Checking the pulser coil assembly

1. Remove the junction box cover.

2. Disconnect the pulser coil assembly coupler ①, and then connect the test harness (3 pins) ② to the pulser coil assembly coupler.

3. Measure the pulser coil assembly output peak voltage. Check the wiring harness and measure the pulser coil assembly resistance if below specification.

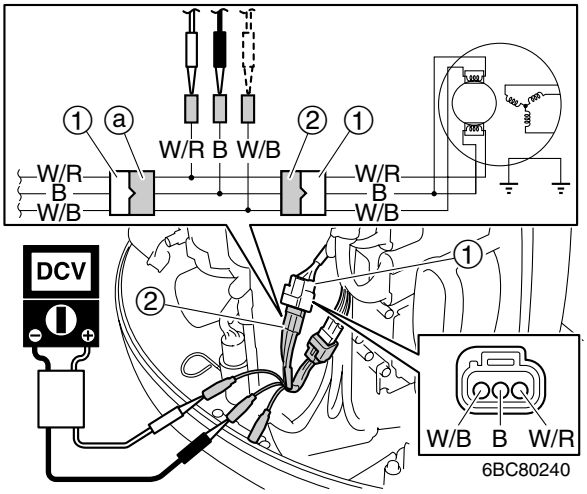

NOTE:
- If measuring the output peak voltage under the unloaded conditions, disconnect the coupler ⓐ.
- To prevent the engine from starting when cranking it, be sure to disconnect all of the fuel injector couplers.
- Using the YDIS or the on-board tachometer to refer the engine speed.

Test harness (3 pins) ②:
90890-06791
Peak voltage adapter B:
90890-03172

Pulser coil assembly output peak voltage (reference data):
White/red (W/R) – Black (B)
White/black (W/B) – Black (B)

r/min	Unloaded	Loaded		
	Cranking		1,500	3,500
DC V	3.1	3.1	15.9	29.9

4. Disconnect the test harness (3 pins) ② from the pulser coil assembly coupler (wire harness end ⓐ).

5. Measure the pulser coil assembly resistance. Replace if out of specification.

NOTE:
- The pulser coil air gap cannot be adjusted.
- Be sure to replace the assembly part when replacing the pulser coil assembly, see “Replacing the timing belt” (5-11).

Pulser coil assembly resistance (reference data):
White/red (W/R) – Black (B)
White/black (W/B) – Black (B)
459.0–561.0 Ω at 20 °C (68 °F)

6. Disconnect the test harness (3 pins) ②, and then connect the pulser coil assembly coupler.

Checking the engine stop lanyard switch

1. Disconnect the 10-pin main harness coupler.

2. Turn the engine start switch to “ON”, and then check the engine stop lanyard switch for continuity. Check the engine start switch or replace the engine stop lanyard switch if out of specification.

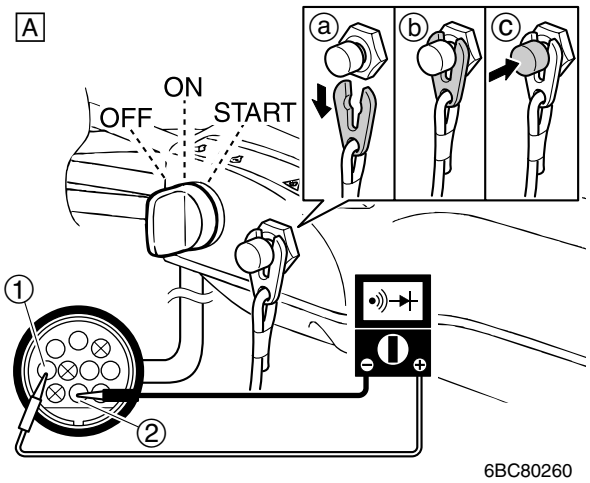

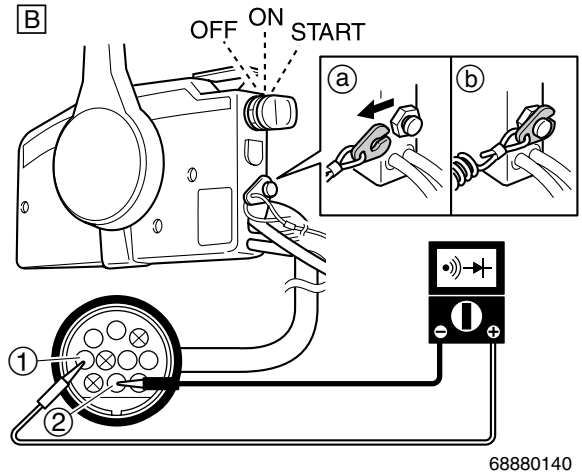

A Tiller handle model
B Remote control model

Engine stop lanyard switch continuity: White (W) ① – Black (B) ②	
Switch position	Continuity
Clip removed ⓐ	Yes
Clip installed ⓑ	No
Button pushed in ⓒ (Tiller handle model)	Yes

3 Turn the engine start switch to “OFF”.

4. Connect the 10-pin main harness coupler.

Engine electric control system

Checking the fuse

1. Check the fuse(s) (30 A, 20 A) for continuity. Replace if there is no continuity.

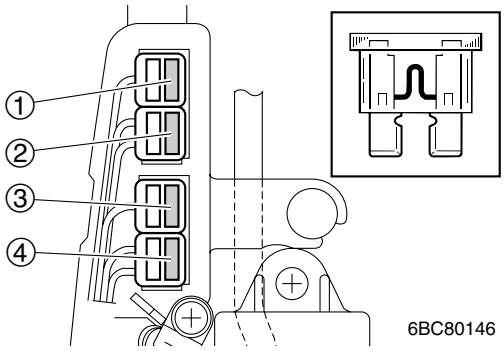

Fuse layout:
30 A, Green (G) ①: Starter relay
20 A, Yellow (Y) ②:
Main, Rectifier Regulator
20 A, Yellow (Y) ③:
Engine start switch
20 A, Yellow (Y) ④:
ECM, Ignition coil,
High-pressure fuel pump,
Fuel injector, ISC

Checking the main/high-pressure fuel pump relay

NOTE:
- Be sure to check the following order when checking the main control circuit and fuel control circuit.
- Be careful not to confuse the lead colors when connect the tester leads, as the lead color of the test harness is different from the lead color of main/high-pressure fuel pump relay.

1. Disconnect the main/high-pressure fuel pump relay coupler ①, and then connect the test harness (8 pins) ② to the main/high-pressure fuel pump relay coupler (wiring harness end).

8

2. Measure the input voltage at the Red (R) ③ and Black (B) ④. Check the fuse and wiring harness if below specification.

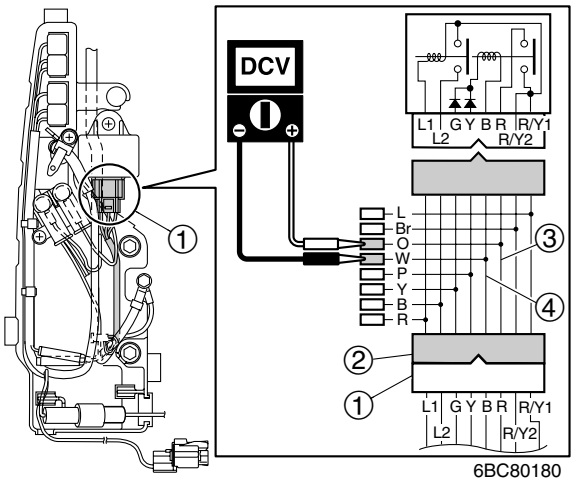

Main/high-pressure fuel pump relay input voltage:
Red (R) ③ – Black (B) ④
12 V (battery voltage)

3. Turn the engine start switch to "ON", and then measure the input voltage at the Yellow (Y) ⑤ and Black (B) ④. Check the engine start switch and wiring harness if below specification.

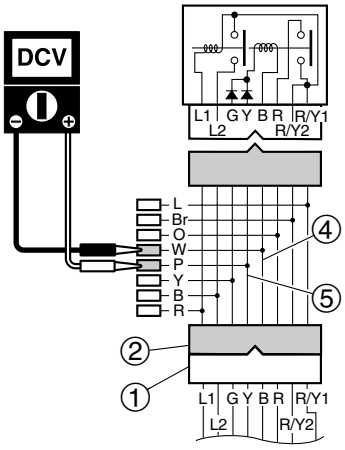

NOTE:
It is not malfunction if the buzzer comes on in this step.

Main/high-pressure fuel pump relay input voltage (main control):
Yellow (Y) ⑤ – Black (B) ④
12 V (battery voltage)

4. Turn the engine start switch to "OFF".

5. Connect the test harness (8 pins) to the main/high-pressure fuel pump relay ⑥.

6. Turn the engine start switch to "ON". Then measure the output voltage at the Red/yellow 1 (R/Y 1) ⑦ and Black (B) ④, and then measure the output voltage at the Red/yellow 2 (R/Y 2) ⑧ and Black ④. Replace the main/high-pressure fuel pump relay if below specification.

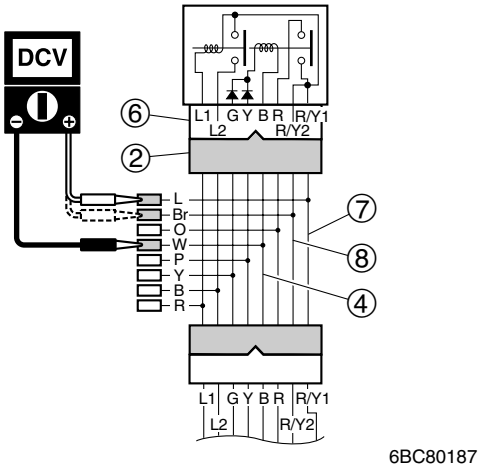

Main/high-pressure fuel pump relay output voltage (main control):
Red/yellow 1 (R/Y 1) ⑦ – Black (B) ④
Red/yellow 2 (R/Y 2) ⑧ – Black (B) ④
12 V (battery voltage)

7. Turn the engine start switch to “ON”. Then measure the input voltage at the Blue 1 (L1) ⑨ and Black (B) ④, and then measure the output voltage at the Blue 2 (L2) ⑩ and Black (B) ④. Check the wiring harness and ECM if the input voltage below specification. Replace the main/high-pressure fuel pump relay if the output voltage below specification.

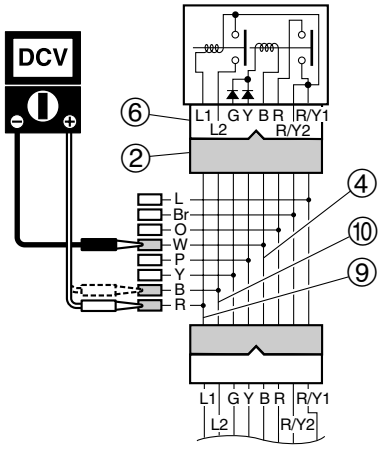

6BC80188

NOTE:

- Measure the input voltage at the Blue 1 (L1) ⑨ and Black (B) ④ after 3 seconds when the engine start switch turned to “ON”.
- Measure the output voltage at the Blue 2 (L2) ⑩ and Black (B) ④ within 3 seconds when the engine start switch turned to “ON”.

Main/high-pressure fuel pump relay input voltage (fuel control):
Blue 1 (L1) ⑨ – Black (B) ④
12 V (battery voltage)
Main/high-pressure fuel pump relay output voltage (fuel control):
Blue 2 (L2) ⑩ – Black (B) ④
12 V (battery voltage)

8. Turn the engine start switch to “START”, and then measure the input voltage at Green (G) ⑪ and Black (B) ④. Check the ECM and wiring harness if below specification.

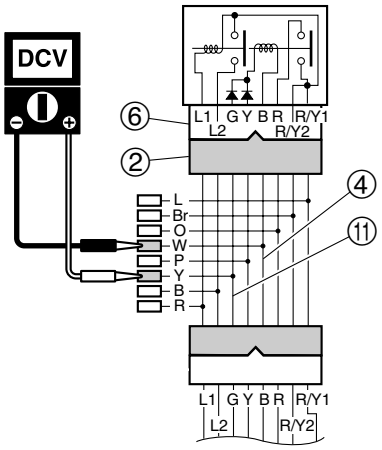

6BC80189

NOTE:

- To prevent from the engine from starting when cranking it, be sure to disconnect all of the fuel injector couplers.
- When measuring the input voltage while the engine is cranking.

Main/high-pressure fuel pump relay input voltage (reference data):
Green (G) ⑪ – Black (B) ④
More than 7 V

9. Turn the engine start switch to “OFF”.

10. Disconnect the test harness (8 pins) ②, and then connect the main/high-pressure fuel pump relay coupler.

8

Checking the ECM

1. Disconnect the ECM coupler ①.

2. Turn the engine start switch to “ON”, and then measure the input voltage at the ECM coupler terminal ⓐ (21, wiring harness end). Check the fuse, engine start switch, wiring harness and main/high-pressure fuel pump relay if out of specification.

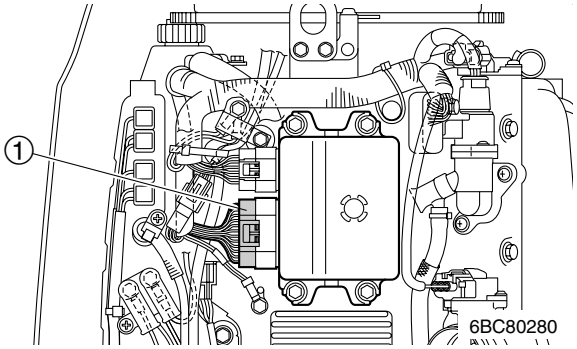

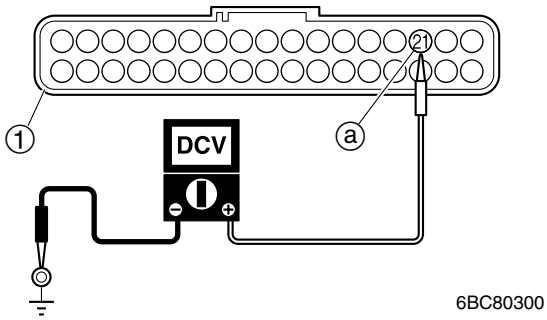

ECM input voltage: Terminal 21 (R/Y) – Ground 12 V (battery voltage)	

3. Turn the engine start switch to “OFF”.

4. Check the continuity between the ECM coupler terminal ⓑ (22 and 31, wiring harness end) and the ground. Check the wiring harness and ground lead if there is no continuity.

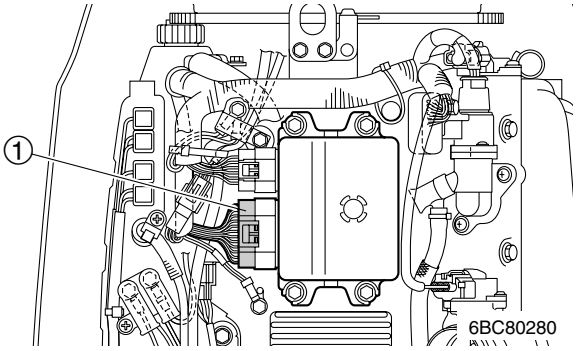

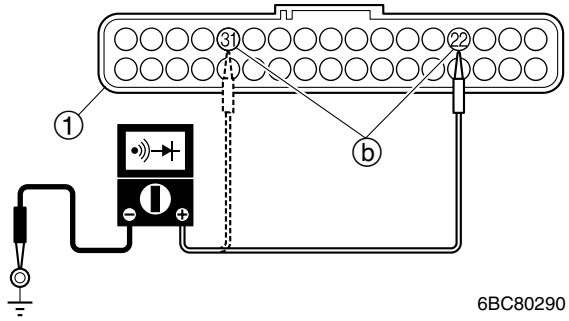

Wiring harness continuity:
Terminal – Ground

Terminal No	Continuity
Terminal 22 (B) – Ground	Yes
Terminal 31 (B) – Ground	Yes

5. Check the continuity between the ECM coupler terminal ⓒ (39, wiring harness end) and the ground terminal (B) of the joint connector 1 ②.

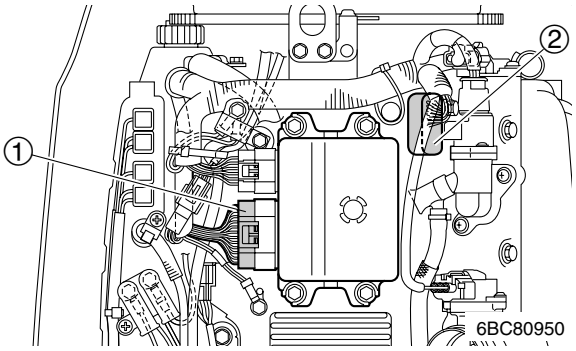

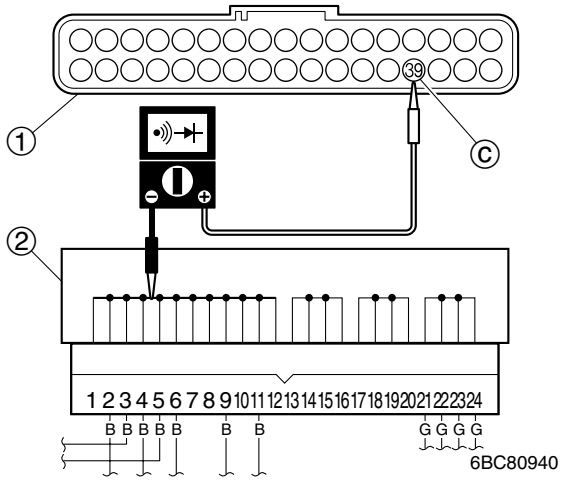

NOTE:
- The location of the joint connector 1 see "Electrical component and wiring harness routing" (8-5).
- To check the continuity of the each sensor ground lead (B) to the joint connector 1 and 2, see Wiring diagram.

Wiring harness continuity: Terminal – Ground terminal	
Terminal No	Continuity
Terminal 39 (B) – Ground terminal (B)	Yes

6. Connect the ECM coupler.

Checking the TPS

NOTE:
- TPS equipped with F75C cannot be adjusted.
- Be sure to check the output voltage after installing the throttle body assembly or TPS.

1. Disconnect the TPS coupler ①.

2. Turn the engine start switch to "ON", and then measure the input voltage at the TPS coupler (wiring harness end). Check the wiring harness and ECM if below specification.

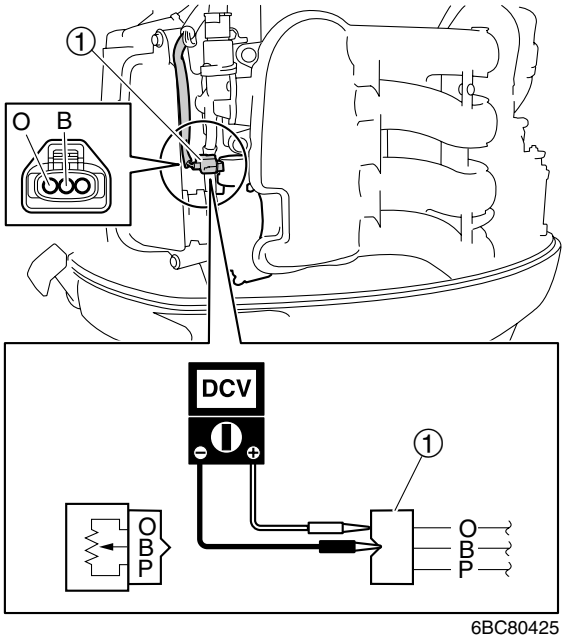

TPS input voltage (reference data): Orange (O) – Black(B) 4.75–5.25 V

3. Turn the engine start switch to "OFF".

4. Connect the leads ② between the TPS ③ and TPS coupler ①.

NOTE:
Using the suitable leads ② for the coupler terminal to connect it.

8

5. Turn the engine start switch to “ON”, and then measure the TPS output voltage. Install the TPS again or replace the TPS if the TPS output voltage at the fully-closed position is out of specification.

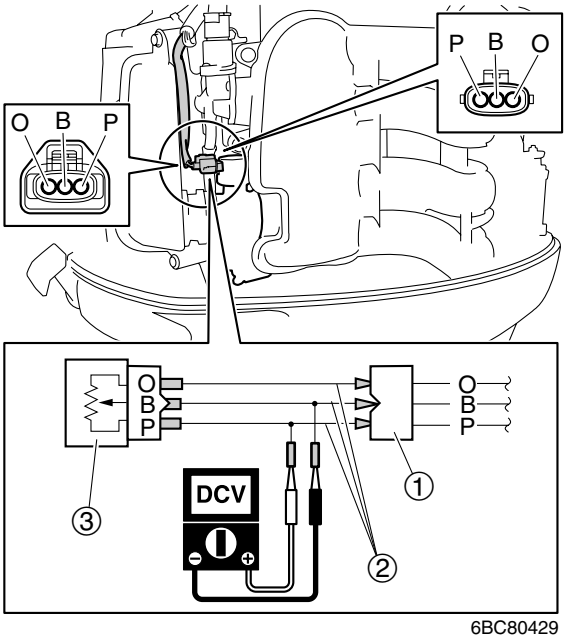

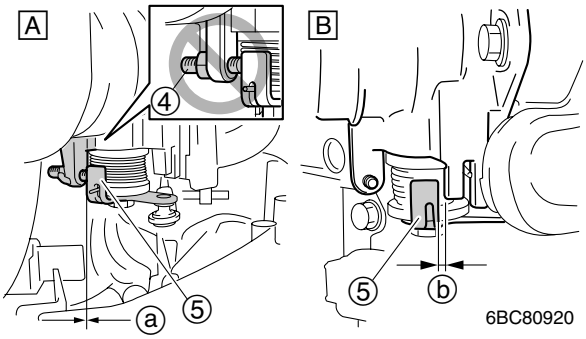

A Fully-closed position
B Fully-opened position

CAUTION:

Do not loosen the throttle stop screw ④.

NOTE:

- Check that the throttle lever ⑤ contacts ⓐ fully-closed stopper at the fully-closed position A. And also check that the gap ⓑ between the throttle lever ⑤ and fully-opened stopper is less than 5 mm (0.22 in) at the fully-opened position B.
- Check that the output voltage increases gradually when turning the throttle lever ⑤ from the fully-closed position A to the fully-opened position B.
- The output voltage at the fully-opened position is reference data.
- Be sure to check the output voltage while the engine running in the step 6.
- The TPS output voltage can also be checked using the “Engine monitor” of the YDIS. To connect and operate the YDIS, see “YDIS” (9-1) and the YDIS (ver. 1.23a or later) Instruction Manual.

TPS output voltage:
Throttle fully-closed position A:
0.8–1.2 V
Throttle fully-opened position B (reference data):
3.7 V

6. Start the engine, and then measure the output voltage.

NOTE:

- Be sure to check the output voltage when setting the throttle lever ⑤ to the fully-closed position and engine running at idle speed.
- The TPS output voltage can also be checked using the “Engine monitor” of the YDIS. To connect and operate the YDIS, see “YDIS” (9-1) and the YDIS (ver. 1.23a or later) Instruction Manual.

TPS output voltage:
Throttle fully-closed position A:
0.8–1.2 V at engine idle speed

7. Turn the engine start switch to “OFF”.

8. Disconnect the leads ②, and then connect the TPS coupler ①.

Checking the ISC

1. Check the operation of the ISC using the “Active test” of the YDIS.

NOTE:
To connect and operate the YDIS, see “YDIS” (9-1) and the YDIS (ver. 1.23a or later) Instruction Manual.

2. Disconnect the ISC coupler.

3. Turn the engine start switch to “ON”, and then measure the input voltage at the ISC coupler (wiring harness end). Check the wiring harness and ECM if below specification.

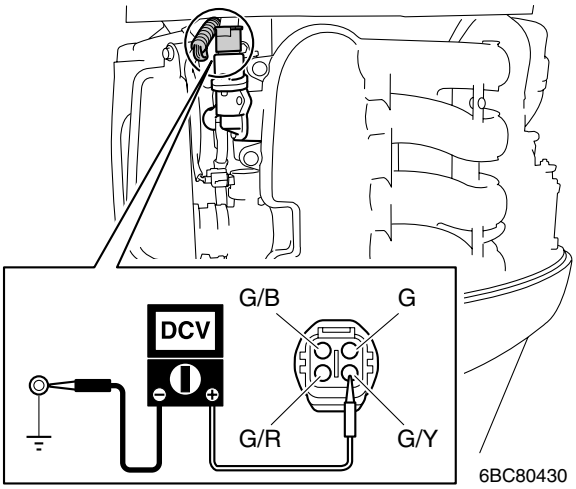

ISC input voltage (reference data):
Green/yellow (G/Y) – Ground
12 V
Green (G) – Ground
0 V
Green/red (G/R) – Ground
8.5 V
Green/black (G/B) – Ground
8.5 V

4. Turn the engine start switch to “OFF”.

5. Measure the ISC resistance. Replace if out of specification.

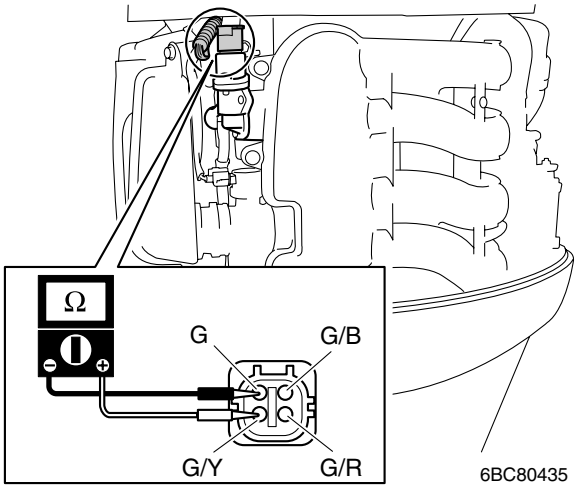

ISC resistance (reference data):
Green/yellow (G/Y) – Green (G)
27–33 Ω at 20 °C (68 °F)
Green/red (G/R) – Green/black (G/B)
27–33 Ω at 20 °C (68 °F)

6. Connect the ISC coupler.

8

Checking the sensor assembly

NOTE:

- The sensor assembly has 2 functions as an intake air temperature sensor and as an intake air pressure sensor.
- Check the sensor assembly when the engine is cooled.
- When checking the sensor assembly, do not start the engine.
- When checking the sensor assembly, remove the top cowling.

1. Disconnect the sensor assembly coupler.

2. Turn the engine start switch to “ON”, and then measure the input voltage at the sensor assembly coupler (wiring harness end). Check the wiring harness and ECM if out of specification.

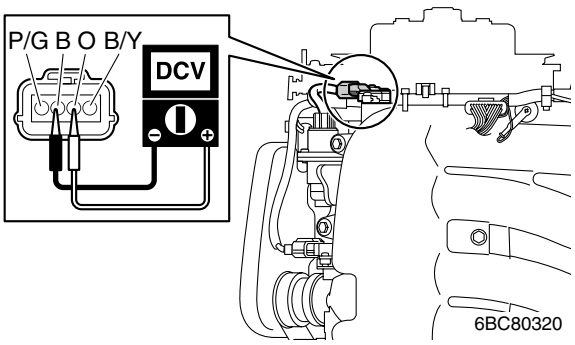

Sensor assembly input voltage (reference data):
Orange (O) – Black (B)
4.75–5.25 V
Black/yellow (B/Y) – Black (B)
4.0–5.0 V
Pink/green (P/G) – Black (B)
4.0–5.0 V

3. Turn the engine start switch to “OFF”.

4. Connect the sensor assembly coupler.

5. Measure the ambient temperature ⓐ.

6. Measure the intake air temperature ⓑ using the YDIS.

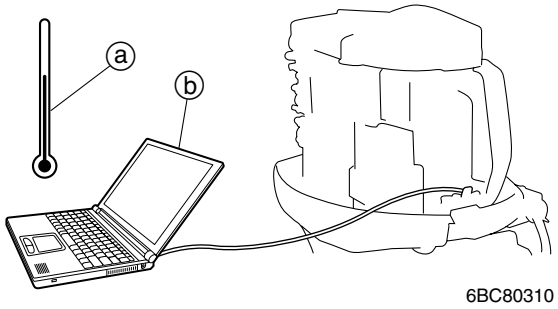

NOTE:

To connect and operate the YDIS, see “YDIS” (9-1) and the YDIS (Ver. 1.23a or later) Instruction Manual.

Intake air temperature (difference between ⓐ and ⓑ):
Within ± 5 °C (± 9 °F)

7. Disconnect the sensor assembly coupler, and then remove the sensor assembly.

8. Place the sensor assembly in a container of water, and then slowly heat the water.

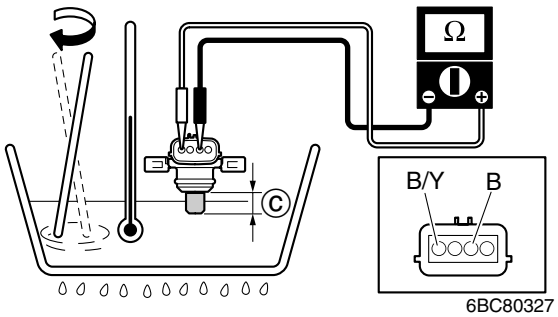

CAUTION:

When measuring the sensor assembly resistance, dip the bottom end ⓒ of the assembly into water. Otherwise, the sensor assembly may be damaged.

9. Measure the sensor assembly resistance. Replace if out of specification.

Sensor assembly resistance (reference data): Black/yellow (B/Y) – Black (B) at 0 °C (32 °F): 5.40–6.60 kΩ at 80 °C (176 °F): 0.282–0.388 kΩ

10. Connect the special service tool to the sensor assembly.

11. Connect the sensor assembly coupler ①.

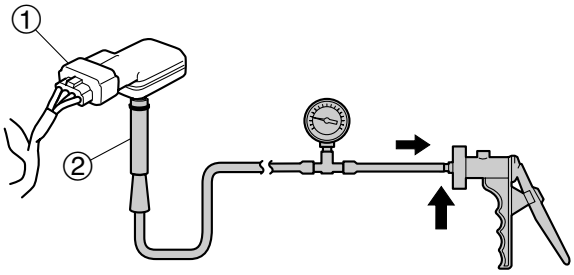

6BC80330

NOTE:

Use a 16 mm (0.63 in) inside diameter hose ② when connecting the special service tool to the sensor assembly.

Vacuum/pressure pump gauge set: 90890-06756

12. Turn the engine start switch to “ON”, and then apply the negative pressure to the sensor assembly slowly. Then check the intake air pressure changed in the specified range using the YDIS. Replace if the intake air pressure is not changed or can not be measured within the specified range.

CAUTION:

Do not apply the negative pressure to the sensor assembly if exceed specified range.

NOTE:

- To connect and operate the YDIS, see “YDIS” (9-1) and the YDIS (Ver1.23a or later) instruction manual.
- For this checking, turn the engine start switch to “ON”. Do not start the engine.
- When the negative pressure increases, the intake air pressure decreases on the YDIS display.
- The specified intake air pressure given below may slightly vary depending on each individual part.

Testing range (Intake air pressure displayed on YDIS): 20–106.7 kPa (0.2–1.07 kgf/cm^2, 3–15 psi)

13. Disconnect the special service tool and sensor assembly coupler.

14. Install the sensor assembly, and then connect the sensor assembly coupler.

Sensor assembly screw: 3.7 N·m (0.37 kgf·m, 2.7 ft·lb)

8

Checking the cooling water temperature sensor

1. Disconnect the cooling water temperature sensor coupler.

2. Turn the engine start switch to “ON”, and then measure the input voltage at the cooling water temperature sensor coupler (wiring harness end). Check the wiring harness and ECM if out of specification.

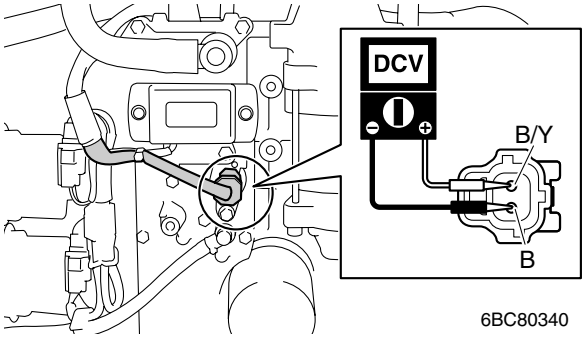

Cooling water temperature sensor input voltage (reference data):
Black/yellow (B/Y) – Black (B)
4.75–5.25 V

3. Turn the engine start switch to “OFF”.

4. Remove the cooling water temperature sensor.

5. Place the cooling water temperature sensor in a container of water, and then slowly heat the water.

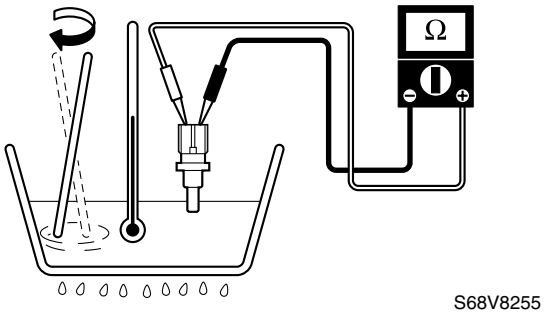

6. Measure the cooling water temperature sensor resistance. Replace if out of specification.

Cooling water temperature sensor resistance (reference data):
Black/yellow (B/Y) – Black (B)
at 0 °C (32 °F): 5.21–6.37 kΩ
at 20 °C (67 °F): 2.45 kΩ
at 80 °C (176 °F): 0.290–0.354 kΩ

7. Install the cooling water temperature sensor, and then connect the cooling water temperature sensor coupler.

NOTE:
To install the cooling water temperature sensor, see the exploded diagram (5-41).

Checking the oil pressure switch

1. Disconnect the oil pressure switch lead.

2. Turn the engine start switch to “ON”, and then measure the input voltage at the oil pressure switch lead terminal ① (wiring harness end). Check the wiring harness and ECM if below specification.

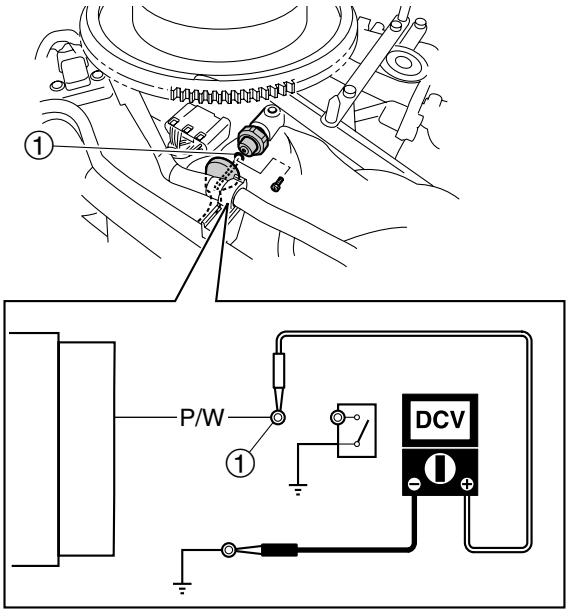

Oil pressure switch input voltage (reference data): Pink/white (P/W) – Ground 11.0–12.0 V

3. Turn the engine start switch to “OFF.”

4. Check the oil pressure switch ② for continuity when both engine is stopped and running. Check the oil pressure and oil pressure switch if out of specification.

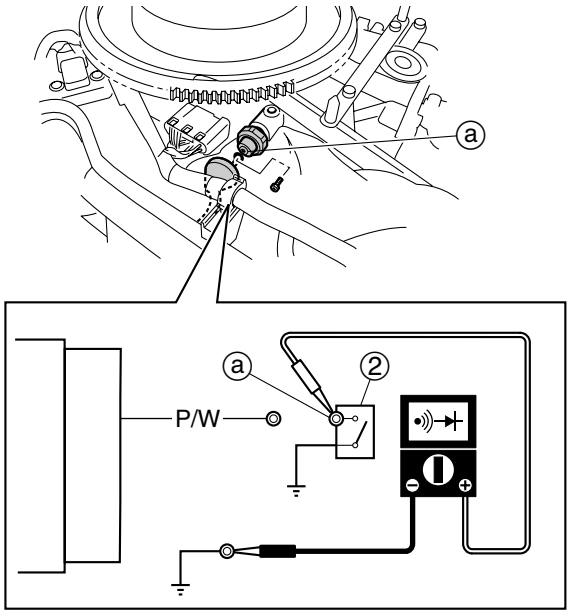

6BC80355

NOTE:
To measure the engine oil pressure, see “Checking the engine oil pressure” (5-2).

Oil pressure switch continuity:
Oil pressure switch terminal ⓐ – Ground

Engine condition	Continuity
Stopped	Yes
Running	No

5. Remove the oil pressure switch ②.

6. Connect the special service tool to the oil pressure switch ②.

7. Check the oil pressure switch ② for continuity at the specified pressure. Replace if out of specification.

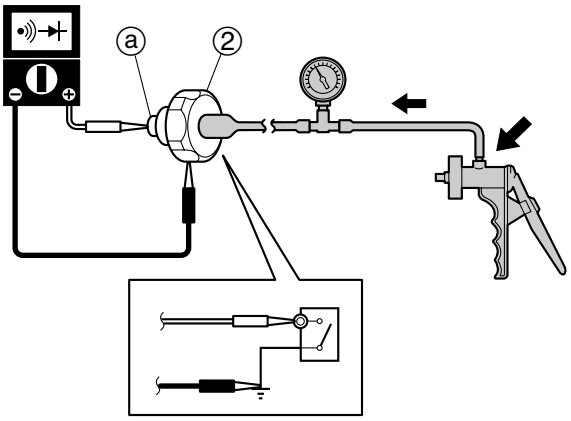

S68V8640

NOTE:
- Use a commercially available vacuum/pressure pump gauge set that can be pressurized up to 200 kPa (2.0 kgf/cm², 29.0 psi).
- Slowly operate the special service tool.
- Apply the pressure to the oil pressure switch gradually. The oil pressure switch is normal if continuity is changed to no continuity at the pressure is 147.1 ± 19.6 kPa (1.47 ± 0.19 kgf/cm², 20.9 ± 2.8 psi).

Oil pressure switch continuity:
Oil pressure switch terminal ⓐ – Ground (switch body)

Oil pressure	Continuity
147.1 kPa (1.471 kgf/cm², 20.9 psi) below	Yes
147.1 kPa (1.471 kgf/cm², 20.9 psi) above	No

8

8. Install the oil pressure switch, and then connect the oil pressure switch lead.

NOTE:
- Apply LOCTITE 572 when installing the oil pressure switch.
- To connect the oil pressure switch lead, see "Electrical component and wiring harness routing" (8-1).

Oil pressure switch:
8 N·m (0.8 kgf·m, 5.9 ft·lb)
Oil pressure switch lead terminal bolt:
2 N·m (0.2 kgf·m, 1.5 ft·lb)

Checking the warning indicator assembly (tiller handle model)

1. Turn the engine start switch to "ON", and then check that the warning indicator comes on and it goes off after 3 seconds. Check the warning indicator assembly with the following procedure if it does not come on or if it continues to come on.

2. Remove the tiller handle cover.

3. Disconnect the warning indicator couplers ① and ②, and then connect the test harness (4 pins) ③ to the warning indicator coupler ① (wiring harness end).

4. Turn the engine start switch to "ON", and then measure the input voltage at the warning indicator couplers ① and ② (wiring harness end). Check the engine start switch, wiring harness and ECM if out of specification.

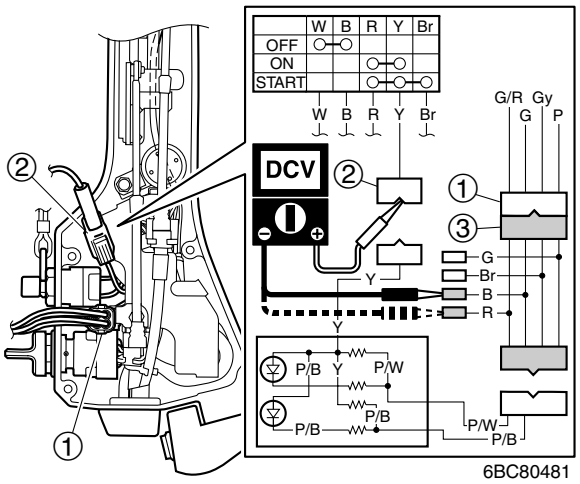

NOTE:
Measure the warning indicator assembly input voltage both within 3 seconds and after 3 seconds when the engine start switch turned to "ON".

Test harness (4 pins) ③:
90890-06878

Warning indicator assembly input voltage (reference data):
Yellow (Y) – Green (G)
12 V (within 3 seconds)
10.9 V (after 3 seconds)
Yellow (Y) – Green/red (G/R)
12 V (within 3 seconds)
10.9 V (after 3 seconds)

5. Turn the engine start switch to “OFF”, and then disconnect the test harness (4 pins) ③.

6. Connect the penlight battery (1.5 V) to the warning indicator couplers ① and ② using suitable leads as shown below. Check that the overheat warning indicator comes on. Replace the warning indicator assembly if does not come on.

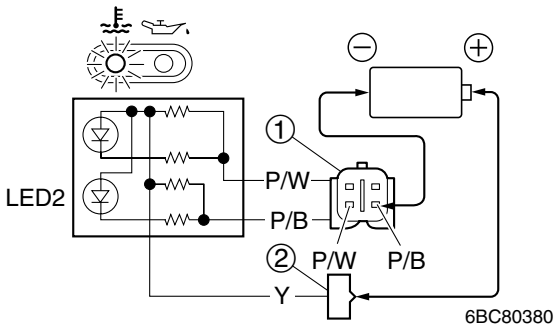

7. Connect the penlight battery (1.5 V) to the warning indicator couplers ① and ② using suitable leads as shown below. Check that the low oil pressure warning indicator comes on. Replace the warning indicator assembly if does not come on.

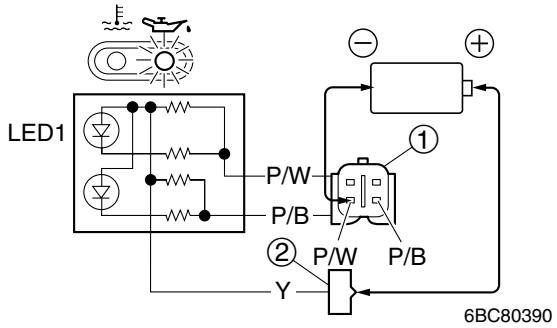

CAUTION:

- **Only use a penlight battery (1.5 V) when checking the LEDs. Other batteries (e.g., alkaline batteries or high-voltage batteries) will damage the diodes.**
- **Do not apply more than 1.7 V when checking the LEDs.**

NOTE:

The LEDs only allow current flow in one direction.

8. Connect the warning indicator couplers, and then install the tiller handle cover.

Checking the buzzer (tiller handle model)

1. Remove the clip from the engine stop lanyard switch.

2. Turn the engine start switch to “START”, and then check that the buzzer comes on. Check the buzzer with the following procedure, if does not come on.

3. Disconnect the buzzer connectors ① and ②.

NOTE:

To remove the tiller handle cover, shift cable and throttle cable from the tiller handle, see “Disassembling the tiller handle” (7-6).

8

4. Turn the engine start switch to “START”, and then measure the buzzer input voltage at the buzzer connectors (wiring harness end). Check the engine start switch, wiring harness and ECM if below specification.

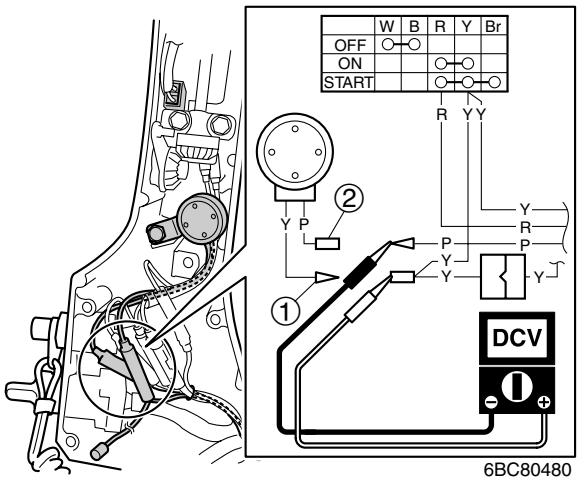

NOTE:
- Measure the input voltage when the clip is remove from the engine stop lanyard switch.
- Turn the engine start switch to “START”, crank the engine several seconds, and measure the input voltage with the engine start switch is back in the “ON” position.

Buzzer input voltage:
Yellow (Y) – Pink (P)
12 V (battery voltage)

5. Turn the engine start switch to “OFF”, and then install the clip to the engine stop lanyard switch.

6. Remove the buzzer.

7. Connect the battery leads to the buzzer connectors ① and ② as shown below, and then check that the buzzer comes on. Replace if does not come on.

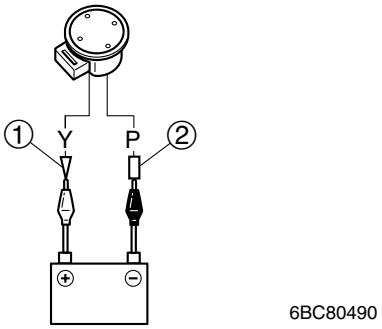

8. Install the buzzer, and then connect the buzzer connectors.

NOTE:
- To install the throttle cable, shift cable and tiller handle cover to the tiller handle, see “Assembling the tiller handle” (7-7).
- To adjust the throttle cable or shift cable, see “Checking the throttle system” (3-9) or “Checking the gear shift system” (3-12).

Checking the shift position switch

1. Disconnect the shift position switch coupler, and then connect the test harness (2 pins) ① to the shift position switch coupler (wiring harness end).

2. Turn the engine start switch to “ON”, and then measure the input voltage at the shift position switch coupler (wiring harness end). Check the wiring harness and ECM if out of specification.

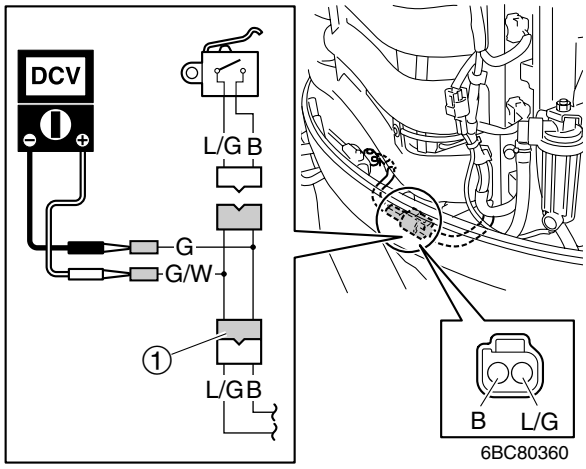

	Test harness (2 pins) ①: 90890-06867

	Shift position switch input voltage (reference data): Blue/green (L/G) – Black (B) 4.75–5.25 V

3. Turn the engine start switch to “OFF”, and then disconnect the test harness (2 pins) ①.

4. Connect the test harness to the shift position switch coupler (shift position switch end).

5. Check the shift position switch for continuity at the position ⓐ and ⓑ. Replace if out of specification.

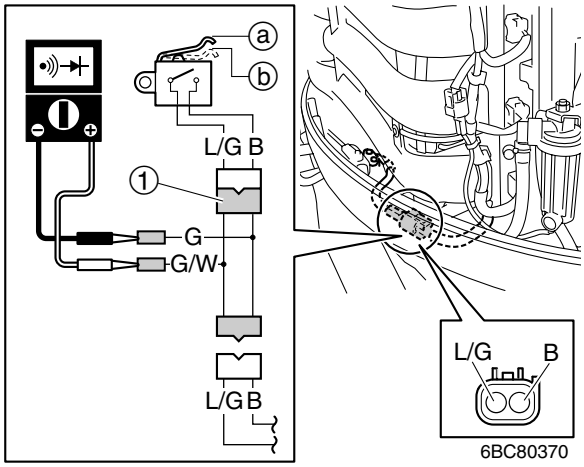

	Shift position switch continuity: Blue/green (L/G) – Black (B)
Switch position	Continuity
Free ⓐ (“F” or “R”)	No
Pushed ⓑ (“N”)	Yes

6. Disconnect the test harness (2 pins) ①, and then connect the shift position switch coupler.

8

Checking the hour meter

1. Disconnect the hour meter coupler, and then connect the special service tool (3 pins) ① to the hour meter coupler (wiring harness end).

2. Turn the engine start switch to “ON”, and then measure the input voltage at the hour meter coupler (wiring harness end). Check the wiring harness and main/high-pressure fuel pump relay if below specification.

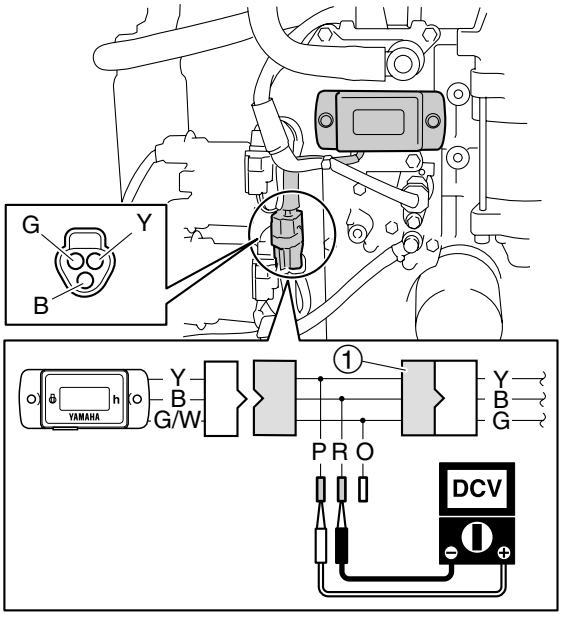

6BC80810

Throttle sensor adjusting lead (3 pins) ①:
90890-06857

Hour meter input voltage:
Yellow (Y) – Black (B)
12 V (battery voltage)

3. Turn the engine start switch to “START”, and then measure the input voltage at the hour meter coupler (wiring harness end). Check the wiring harness and ECM if below specification.

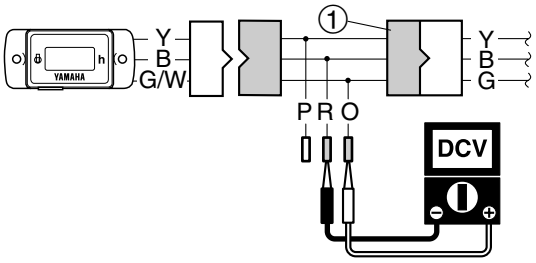

6BC80815

NOTE:
- To prevent the engine from starting when cranking it, be sure to disconnect all of the fuel injector couplers.
- When measuring the input voltage while the engine is cranking.

Hour meter input voltage (reference data):
Green (G) – Black (B)
more than 7 V

4. Turn the engine start switch to “OFF”, and then disconnect the special service tool (3 pins) ①.

5. Connect the special service tool (3 pins) ① to the hour meter coupler (hour meter end).

6. Connect the battery leads to the connector ② and ③ as shown below, and then check that the all segments are displayed on hour meter for 2 seconds. Replace the hour meter if there is no display.

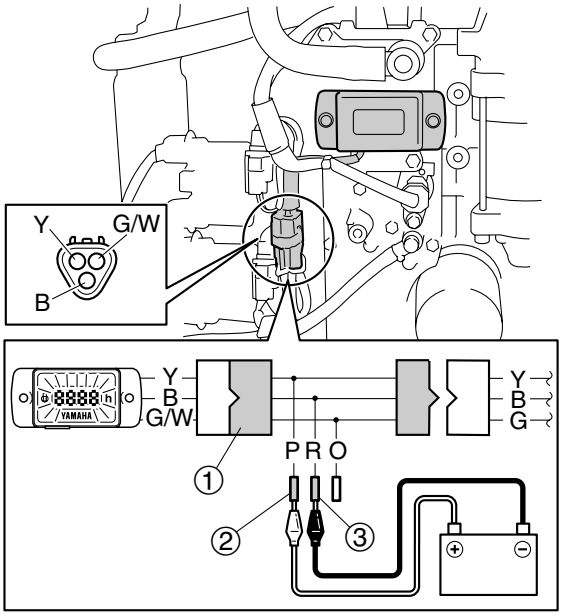

6BC80820

7. Disconnect the battery leads and special service tool (3 pins) ①, and then connect the hour meter coupler.

Fuel control system

Checking the water detection switch

NOTE:

Be sure to check the water detection switch each time the fuel filter is checked.

1. Disconnect the water detection switch coupler, and then connect the test harness (2 pins) ① to the water detection switch coupler (wiring harness end) .

2. Turn the engine start switch to “ON”, and then measure the input voltage at the water detection switch coupler (wiring harness end). Check the wiring harness and ECM if out of specification.

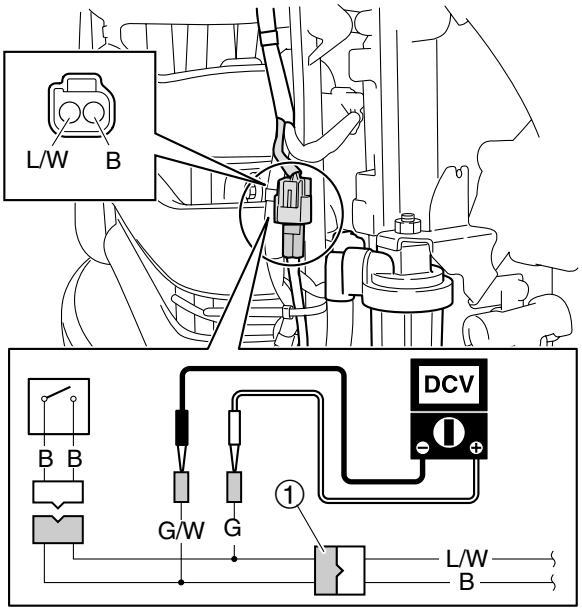

6BC80400

Test harness (2 pins) ①:
90890-06867

Water detection switch input voltage (reference data):
Blue/white (L/W) – Black (B)
4.75–5.25 V

3. Turn the engine start switch to “OFF”, and then disconnect the test harness (2 pins) ①.

4. Remove the fuel filter cup assembly ②.

NOTE:

Do not twist the water detection switch lead when removing the fuel filter cup assembly.

8

5. Check the water detection switch for continuity with the float in positions [A] and [B]. Replace the fuel filter cup assembly if out of specification.

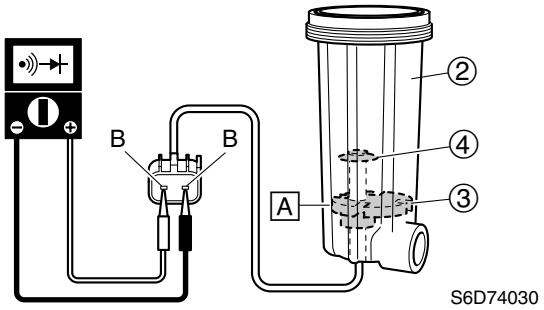

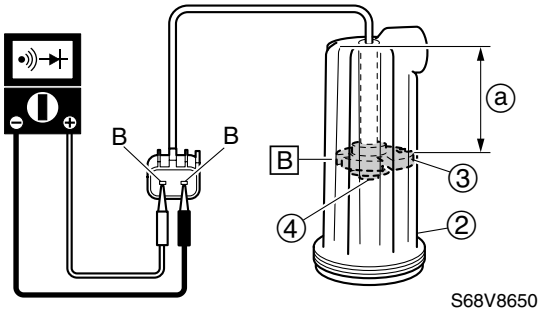

NOTE:
- Before checking the water detection switch, make sure that the float ③ is able to move to positions [A] and [B] as shown.
- Be sure not to remove the clip ④ and float ③, otherwise the water detection switch may be damaged.

Float height ⓐ:
(float position [B])
43 mm (1.69 in)

Water detection switch continuity:
Black (B) – Black (B)

Float position	Continuity
[A]	No
[B]	Yes

6. Install the fuel filter cup assembly, and then connect the water detection switch coupler.

NOTE:
Do not twist the water detection switch lead when installing the fuel filter cup assembly.

Checking the fuel injector

1. Check the operation of the all fuel injectors using the “Stationary test” of the YDIS.

NOTE:
To connect and operate the YDIS, see “YDIS” (9-1) and the YDIS (Ver. 1.23a or later) Instruction Manual.

2. Disconnect a fuel injector coupler.

3. Turn the engine start switch to “ON”, and then measure the input voltage at the fuel injector coupler (wiring harness end). Check the wiring harness and main/high-pressure fuel pump relay if below specification.

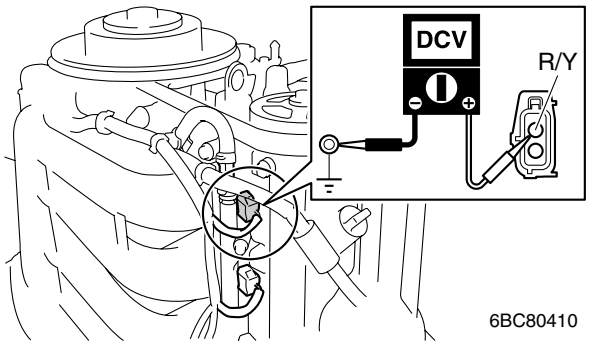

Fuel injector input voltage:
Red/yellow (R/Y) – Ground
12 V (battery voltage)

4. Turn the engine start switch to “ON”, and then measure the input voltage at the fuel injector coupler (wiring harness end). Check the wiring harness and ECM if below specification.

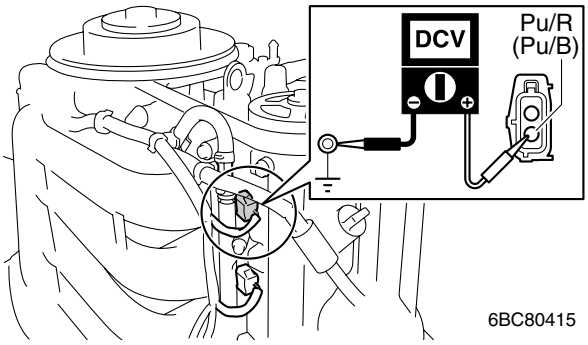

NOTE:
- To get accurate voltage measurement, disconnect the only one fuel injector coupler at a time and connect 3 couplers.
- Repeat the steps 2–4 for each fuel injector coupler.

Fuel injector input voltage:
Purple/red (Pu/R) – Ground
Purple/black (Pu/B) – Ground
12 V (battery voltage)

5. Turn the engine start switch to “OFF”.

6. Measure the fuel injector resistance.

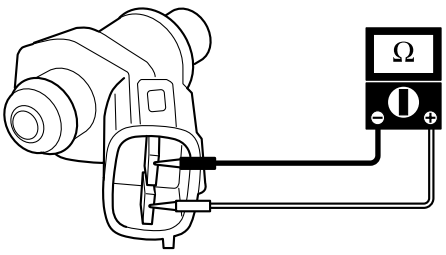

Fuel injector resistance (reference data):
12.0 Ω at 21 °C (70 °F)

7. Connect a fuel injector coupler.

Checking the high-pressure fuel pump

1. Turn the engine start switch to “ON”, and then check the operation of the high-pressure fuel pump.

NOTE:
- To check the fuel pump operation, listen to the operating sound. The fuel pump operates 3 seconds when the engine start switch is turned to “ON”.
- The high-pressure fuel pump operation can also be checked using the “Stationary test” of the YDIS.

2. Turn the engine start switch to “OFF”.

3. Disconnect the high-pressure fuel pump coupler.

4. Turn the engine start switch to “ON”, and then measure the input voltage at the high-pressure fuel pump coupler (wiring harness end). Check the wiring harness and main/high-pressure fuel pump relay if below specification.

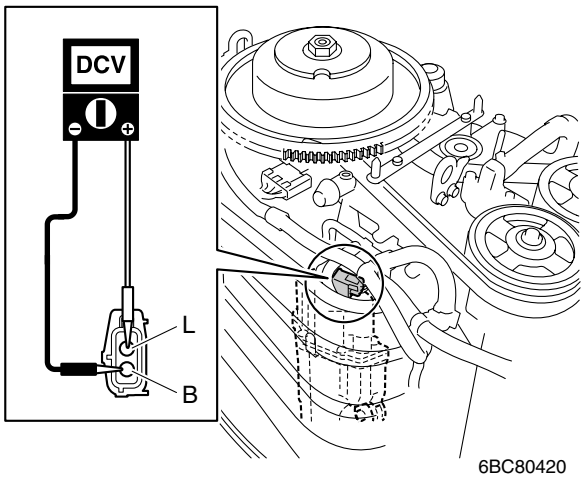

NOTE:
Measure the high-pressure fuel pump input voltage within 3 seconds when the engine start switch turned to “ON”.

High-pressure fuel pump input voltage:
Blue (L) – Black (B)
12 V (battery voltage)

8

5. Turn the engine start switch to “OFF”.

6. Measure the high-pressure fuel pump resistance.

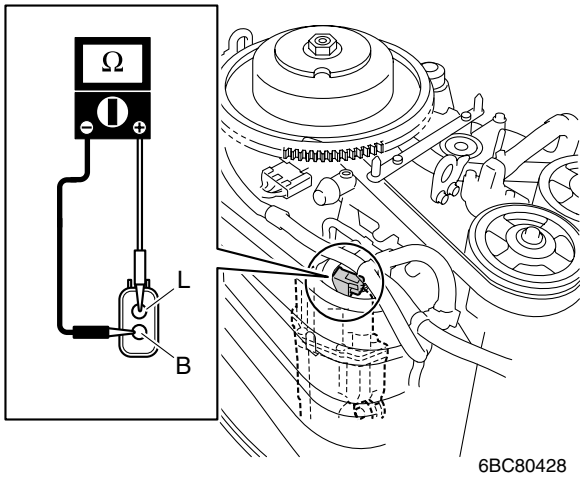

NOTE:
When measuring the high-pressure fuel pump resistance, remove the intake manifold. To remove the intake manifold, see “Removing the intake manifold” (4-14).

High-pressure fuel pump resistance (reference data):
Blue (L) – Black (B)
0.6 Ω at 20 °C (68 °F)

7. Connect the high-pressure fuel pump coupler.

NOTE:
To install the intake manifold, see “Installing the intake manifold” (4-15).

Charging system

Checking the stator assembly

1. Remove the intake silencer and junction box cover.

2. Disconnect the stator assembly coupler, and then connect the test harness (6 pins) ① to the stator assembly coupler (wiring harness end).

3. Measure the stator assembly output peak voltage. Check the stator assembly resistance if below specification.

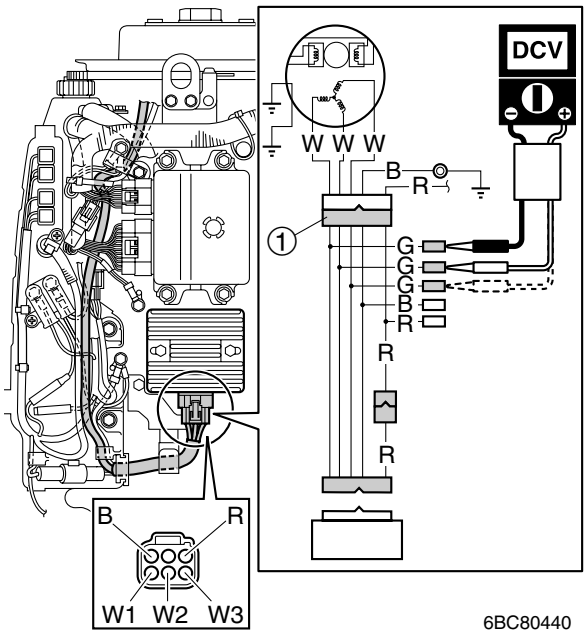

NOTE:
- To prevent the engine from starting when cranking it, be sure to disconnect all of the fuel injector couplers.
- Using the YDIS or the on-board tachometer to refer the engine speed.

Test harness (6 pins) ①:
90890-06848
Peak voltage adapter B:
90890-03172

Stator assembly output peak voltage (reference data): White 1 (W1) – White 2 (W2) White 1 (W1) – White 3 (W3)			
r/min	Unloaded		
	Cranking	1,500	3,500
DC V	12.4	45.2	96.6

4. Measure the stator assembly resistance. Replace if out of specification.

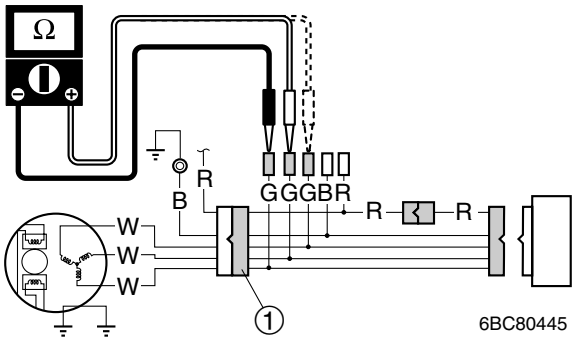

Stator assembly resistance (reference data): White 1 (W1) – White 2 (W2) White 1 (W1) – White 3 (W3) 0.24–0.36 Ω at 20 °C (68 °F)

5. Disconnect the test harness (6 pins) ①, and then connect the stator assembly coupler.

6. Install the intake silencer and junction box cover.

Checking the Rectifier Regulator

CAUTION:

If the battery cables are connected in reverse, the Rectifier Regulator can be damaged.

1. Remove the intake silencer and junction box cover.

2. Disconnect the Rectifier Regulator lead coupler ①.

3. Measure the Rectifier Regulator output peak voltage at the Rectifier Regulator lead coupler ① (Rectifier Regulator end). Check the Rectifier Regulator ② for continuity if below specification.

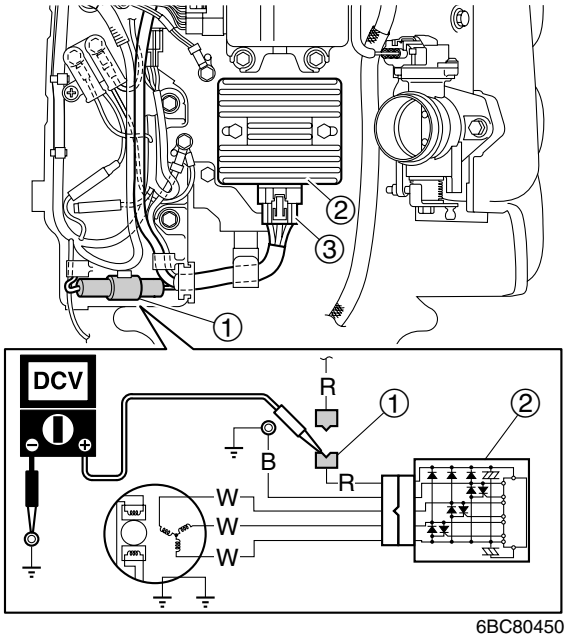

NOTE:

- Do not use peak voltage adaptor B when measuring the Rectifier Regulator output peak voltage.
- Be sure to check the stator assembly before measuring the Rectifier Regulator output peak voltage.
- Using the YDIS or the on-board tachometer to refer the engine speed.

Rectifier Regulator output peak voltage (reference data): Red (R) – Ground		
r/min	Unloaded	
	1,500	3,500
DC V	13.0	13.0

8

4. Connect the Rectifier Regulator lead coupler ①.

5. Disconnect the stator assembly coupler ③, and then connect the test harness (6 pins) ④ to the Rectifier Regulator ②.

6. Check the Rectifier Regulator for continuity. Replace if out of specification.

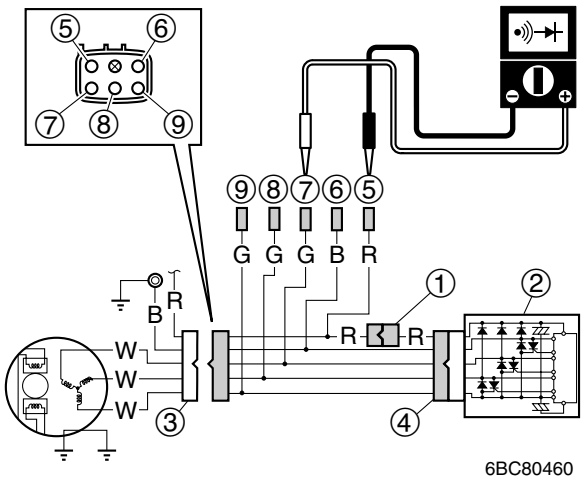

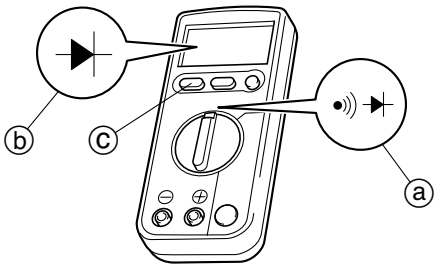

NOTE:

Be sure to set the measurement range ⓐ, and display the testing diode mode ⓑ by pushing the "SHIFT" switch ⓒ when checking the Rectifier Regulator continuity.

Test harness (6 pins) ④:
90890-06848

Rectifier Regulator continuity (testing diode mode):

Tester lead ⊕	Tester lead ⊖	Display value (V)
B ⑥	R ⑤	0.77–0.81 V (reference data)
W ⑦	R ⑤	0.41–0.46 V (reference data)
W ⑧		
W ⑨		
B ⑥	W ⑦	
	W ⑧	
	W ⑨	
R ⑤	B ⑥	OL (overload)
	W ⑦	
	W ⑧	
	W ⑨	
W ⑦	B ⑥	
W ⑧		
W ⑨		

7. Disconnect the test harness (6 pins) ④, and then connect the stator assembly coupler ③.

8. Install the intake silencer and junction box cover.

Troubleshooting

YDIS 9-1
Introduction 9-1
Connecting the communication cable to the outboard motor 9-3

Troubleshooting the power unit 9-4
Troubleshooting the power unit using the YDIS 9-4
Trouble code and checking step 9-6
Troubleshooting the power unit using the diagnostic flash indicator 9-8
Troubleshooting the power unit (trouble code not detected) 9-9

Troubleshooting the lower unit 9-15

YDIS

Introduction

Feature

The newly developed YDIS provides quicker detection and analysis of engine malfunctions.
By connecting your computer to the ECM of an outboard motor using the communication cable, this software can be used to display sensor data and data stored in the ECM on a computer's monitor. If this software is run on Microsoft Windows® 95, Windows 98, Windows Me, Windows 2000 or Windows XP, the information can be displayed in colorful graphics. Also, the software can be operated using either a mouse or a keyboard.
In addition, the data for the main functions (Diagnosis, Diagnosis record, Engine monitor and Data logger) can be saved on a disk or printed out.

Function

1. **Diagnosis:** When the engine start switch is turned to "ON," each sensor's status and each ECM trouble code or item is displayed. This enables you to find malfunctioning parts and controls quickly.
   The items displayed are the same as those described in "Trouble code and checking step" in this chapter (9-6).

2. **Diagnosis record:** Sensors that had been activated and ECM trouble codes that have been recorded are displayed. This allows you to check the outboard motor's record of malfunctions.
   The items displayed are the same as those described in "Trouble code and checking step" in this chapter (9-6).

3. **Engine monitor:** Each sensor status and the ECM data are displayed while the engine is running. This enables you to find malfunctioning parts quickly. In addition, the data displayed using the Engine Monitor function can be displayed in a graph.

Items: F75C

1	Engine speed	6	TPS voltage (*2)	11	Intake temperature (*3)
2	Intake pressure (*1)	7	Throttle valve opening	12	Engine stop lanyard switch
3	Atmospheric pressure	8	ISC valve opening	13	Shift position switch
4	Ignition timing	9	Fuel injection duration	14	Oil press switch (*4)
5	Battery voltage (12–16)	10	Water temperature	15	Dual engine system switch (*5)

(*1): Intake air pressure
(*2): TPS output voltage
(*3): Intake air temperature
(*4): Oil pressure switch
(*5): The YDIS shows this item, however the dual engine system switch is not equipped with the F75C.

4. **Stationary test:** Operation tests can be performed with the engine off.

Items: F75C

1	Ignite ignition coils #1&#4	3	Operate injectors #1&#4	5	Operate electric fuel pump (*1)
2	Ignite ignition coils #2&#3	4	Operate injectors #2&#3	6	Operate ISC valve

(*1): Operate high-pressure fuel pump

5. **Active test:** Operation tests can be performed with the engine running.

Items: F75C

1	Fully open ISC valve	2	Angle of ISC valve (*1) opening

(*1): During the angle of ISC valve opening test, the opening angle of the ISC valve is fixed for up to 30 minutes so that the TPS adjustment at engine idle speed can be performed. However, this function is not available for F75C.

6. **Data logger:** Displays 13 minutes of recorded data for 2 or more of the items stored in the ECM. In addition, the operating time as compared to the engine speed and the total operating time are displayed. This allows you to check the operating status of the engine.

Items: F75C

1	Engine speed	3	TPS voltage (*1)	5	Intake pressure (*2)
2	Battery voltage (12–16)	4	Water temperature	6	Oil press switch (*3)

(*1): TPS output voltage
(*2): Intake air pressure
(*3): Oil pressure switch

NOTE:
To display the displays and graphs, see the YDIS (Ver. 1.23a or later) Instruction Manual.

Contents

1. CD-ROM (software + instruction manual) (1)
2. Adapter (1)
3. Communication cable (1)

Connecting the communication cable to the outboard motor

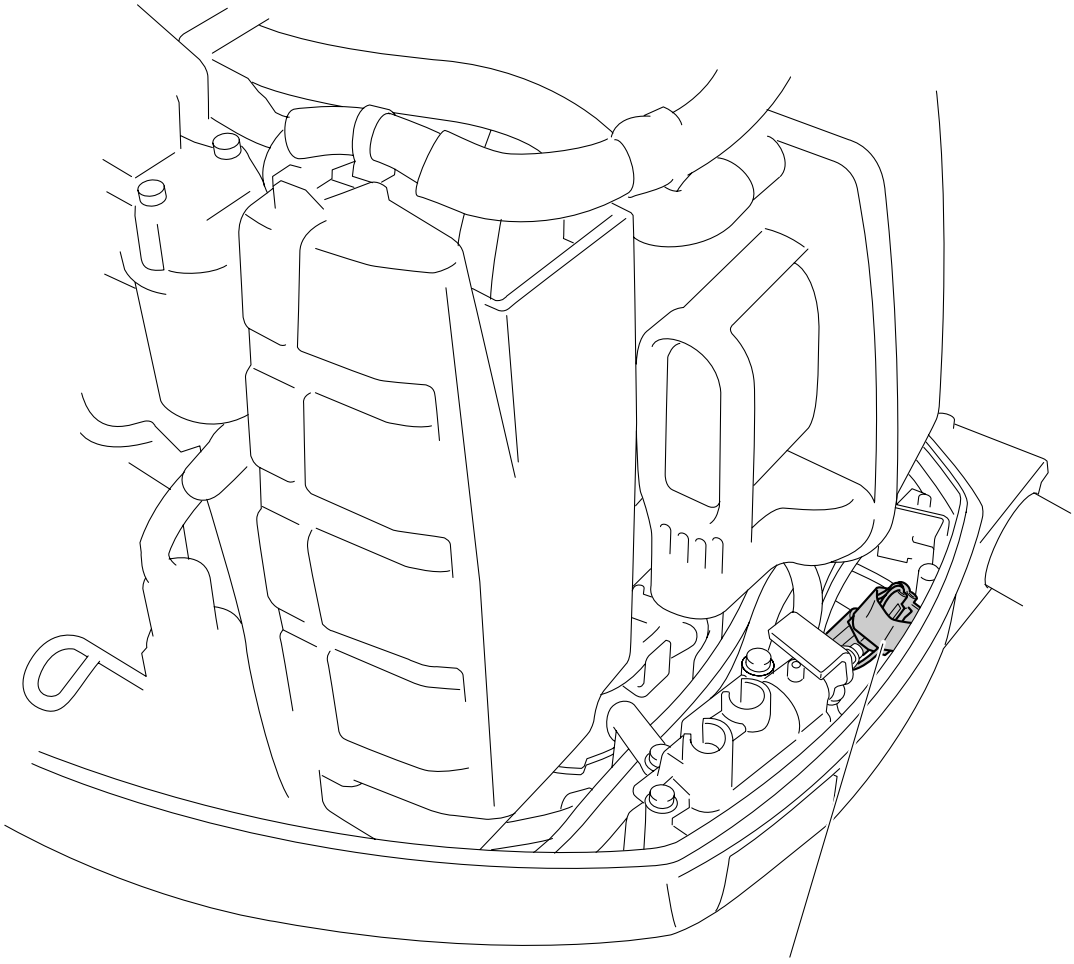

6BC90010

Troubleshooting the power unit

NOTE:

- Before troubleshooting the outboard motor, make sure that fresh fuel of the specified type has been used.
- Check the trouble code using the YDIS (or diagnostic flash indicator B) first, and then check the electronic control system follow the trouble code chart.
- If a trouble code is not detected, check the power unit according to “Troubleshooting the power unit (trouble code not detected).”
- Be sure to check the ECM circuit. To check the ECM circuit, see “Checking the ECM” (8-37).
- Be sure to check that the couplers and connectors are securely connected.
- When deleting the diagnosis record using the YDIS, be sure to check the time of occurrence.
- When checking the input voltage of a part, a malfunction is detected by the ECM because the coupler or connector of the part must be disconnected. Therefore, be sure to delete the trouble code after checking the input voltage.

Troubleshooting the power unit using the YDIS

NOTE:

- Use the trouble codes displayed by the YDIS and check each part using the table below.
- After checking, repairing or replacing a part, delete the trouble code, and then check that the trouble code is not detected again.
- Check the items listed in the table, if all the items are in good condition, delete the trouble code, and then check the trouble codes again. If the same trouble codes are detected again, the ECM is faulty.
- The symptoms of the engine are divided in the table below. Multiple malfunctions that have been duplicated cannot be limited to the items in the table and may change according to the operating conditions and other conditions.

Trouble code table

Code No.	Item	Diagnostic flash indicator B code output	Diagnosis code output (YDIS Ver. 1.23a)	Diagnosis record (YDIS Ver. 1.23a)
1	Normal	○	—	—
13	Pulser coil assembly malfunction	○	○	○
15	Cooling water temperature sensor malfunction	○	○	○
18	TPS malfunction	○	○	○
19 (*1)	Battery voltage malfunction	○	○	○
23	Intake temperature sensor malfunction	○	○	○
27 (*2)	Water detection switch activation	○	—	—
28	Shift position switch malfunction	○	○	○
29	Intake pressure sensor malfunction	○	○	○
37	Intake air passage (ISC) malfunction	○	○	○
44	Engine stop lanyard switch malfunction	○	○	—
49 (*3)	Over cooling	○	○	○
59	Memory data	—	—	○

(*1): Code 19 is not displayed when the engine speed is less than 2,000 rpm.
(*2): Code 27 is displayed when the water detection switch detects water and activates.
(*3): Code 49 is not displayed when the engine speed is less than 3,000 rpm.

Symptoms table

Engine startability	Engine idle speed	Maximum engine speed	Acceleration	Symptom
Starts	Normal(*1)	Normal(*2)	Normal(*3)	A
	Increases (steady)	Normal	Normal	B
		Decreases(*4)	Poor(*5)	C
	Increases (unsteady)	Normal	Normal	D
	Unsteady	Decreases	Poor	E
Does not starts	Engine does not operate			F

(*1): 650–750 r/min at engine idle speed
(*2): 5,000–6,000 r/min
(*3): Engine speed increases according to throttle opening angle
(*4): Less than the specified engine speed
(*5): Engine speed does not increase according to throttle opening angle

Trouble code and checking step

Trouble code	Item	Symptom	Remarks	Checking steps	Refer to page
13	Pulser coil assembly malfunction	C F	—	1. Measure the output peak voltage.	8-33
				2. Measure the resistance.	8-33
				3. Check the wiring harness.	WD
				4. Check the projections of the plate for damage.	5-4
15	Cooling water temperature sensor malfunction	B	—	1. Check the cooling water temperature using the YDIS.	9-1
				2. Measure the input voltage.	8-43
				3. Measure the resistance.	8-43
18	TPS malfunction	B E	—	1. Check the throttle valve opening using the YDIS.	9-1
				2. Measure the input voltage.	8-38
				3. Measure the output voltage.	8-38
				4. Check the wiring harness.	WD
19	Battery voltage malfunction	A	—	1. Check the battery voltage using the YDIS.	9-1
				2. Measure the stator assembly output peak voltage.	8-53
				3. Measure the Rectifier Regulator output peak voltage.	8-54
				4. Check the fuses.	8-34
				5. Check the battery cables and terminals for proper connection.	8-3
23	Intake air temperature sensor (*1) malfunction	B	—	1. Measure the input voltage.	8-41
				2. Check the intake air temperature using the YDIS.	9-1
				3. Measure the resistance.	8-41
27	Water detection switch activation (*2)	A F	• Water in the fuel filter cup assembly • Water detection switch malfunction	1. Drain the water from fuel filter cup assembly, and check the fuel line.	3-3 3-4
				2. Check the switch continuity.	8-50

WD: See the wiring diagram
(*1): Sensor assembly
(*2): Buzzer comes on when the engine start switch is turned to “ON” and gear shift to the “N” position.

9

Trouble code	Item	Symptom	Remarks	Checking steps	Refer to page
28	Shift position switch malfunction	A	—	1. Check the switch operation using the YDIS.	9-1
				2. Measure the input voltage.	8-47
				3. Check the switch continuity.	8-47
				4. Check the shift bushing and shift mechanism.	3-12
29	Intake air pressure sensor (*1) malfunction	C		1. Check the intake air pressure using the YDIS.	9-1
				2. Measure the input voltage.	8-41
				3. Check the operation of the intake air pressure sensor (*1) using the YDIS.	8-41
37	Intake air passage (ISC) malfunction	D	Trolling speed is unstable	1. Check the ISC operation using the YDIS.	9-1
				2. Measure the input voltage.	8-40
				3. Measure the resistance.	8-40
				4. Check the wiring harness.	WD
44	Engine stop lanyard switch malfunction	F	Engine stalls (when running engine) Buzzer comes on	1. Check the switch operation using the YDIS.	9-1
				2. Check that the clip is installed.	8-33
				3. Check the switch continuity.	8-33
49	Over cooling	E	• Thermostat malfunction • Cooling water temperature sensor malfunction	1. Check the cooling water temperature using the YDIS.	9-1
				2. Check the thermostat valve opening.	3-8
				3. Check the cooling water temperature sensor.	8-43
59	Memory data	A	Wiring to ECM malfunction	1. Check the diagnosis record and data logger using the YDIS.	9-1

WD: See the wiring diagram
(*1): Sensor assembly

Troubleshooting the power unit using the diagnostic flash indicator

1. Connect the special service tool to the outboard motor as shown.

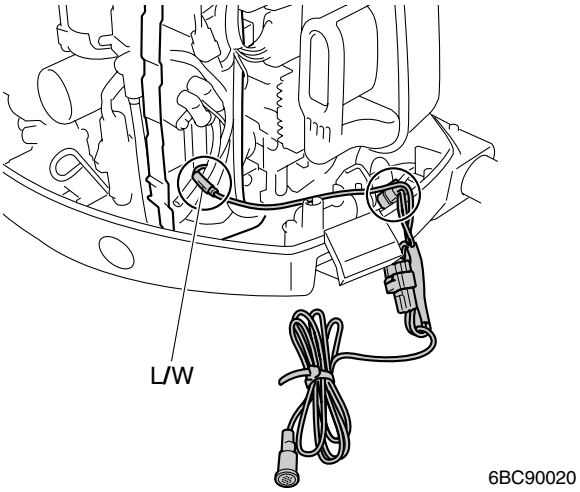

NOTE:
Make sure that the couplers and connectors of the all electrical components are securely connected before checking.

	Diagnostic flash indicator B: 90890-06865

2. Start the engine and let it idle.

3. Check the flash pattern of the special service tool to determine.
   - Trouble code indication
     Example: Normal condition
     (no defective part or irregular processing is found)
     ⓐ: Light on, 0.33 second
     ⓑ: Light off, 4.95 seconds

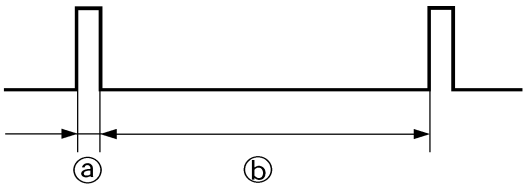

   - Trouble code indication
     Example: The illustration indicates code numbers 23.
     ⓐ: Light on, 0.33 second
     ⓑ: Light off, 4.95 seconds
     ⓒ: Light off, 0.33 second
     ⓓ: Light off, 1.65 seconds

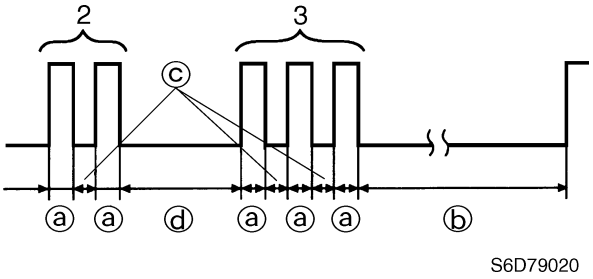

NOTE:
See “Trouble code table” (9-5).

4. If a flash pattern listed in the trouble code chart is displayed, check the malfunctioning part according to the flash pattern.

NOTE:
- When more than one problem is detected, the light of the special service tool flashes in the pattern of the lowest numbered problem. After that problem is corrected, the light flashes in the pattern of the next lowest numbered problem. This continues until all of the problems are detected and corrected.
- If a trouble code is detected, see “Trouble code and checking step” (9-6).

9

Troubleshooting the power unit (trouble code not detected)

NOTE:

- Symptom 1: Specific trouble conditions
- Symptom 2: Trouble conditions of an area or individual part
- Cause 1: The content considered as the trouble causes of symptom 2.
- Cause 2: The content considered as the trouble causes of cause 1 (described if necessary).

Symptom 1: Engine does not crank

Symptom 2	Cause 1	Cause 2	Checking step	Refer to page
Starter motor does not operate	Gear shift not in the “N” position	—	Set the gear shift to the “N” position.	1-23
	Blown fuse	—	Check the fuse (30 A).	8-34
	Discharged battery	—	Check the battery.	3-17
	Engine start switch malfunction	—	Check the engine start switch.	8-27
	Neutral switch malfunction	—	Check the neutral switch.	8-28
	Starter relay malfunction	—	Check the starter relay.	8-29
	Short, open or loose connection in starter motor circuit	—	Check the wiring harness.	WD
	Starter motor malfunction	—	Disassemble and check the starter motor.	8-20
Starter motor operates, but the engine does not crank	Starter motor malfunction	—	Disassemble and check the starter motor.	8-20
	Stuck piston and crankshaft	—	Disassemble and check the power unit.	5-40
	Piston lock due to water or oil in the combustion chamber			
	Stuck drive shaft	Salt buildup on the drive shaft and bushing	Disassemble and check the upper case.	7-16
		Malfunction of the lower unit internal parts	Disassemble and check the lower unit.	6-13

WD: See the wiring diagram.

Symptom 1: Engine does not start (engine cranks)

Symptom 2	Cause 1	Cause 2	Checking step	Refer to page
Spark plug does not spark	Spark plug malfunction	—	Check the spark plug.	3-7
	Spark plug wire malfunction	—	Check the spark plug wire.	8-31
	Ignition coil malfunction	—	Check the ignition coil.	8-31
	Engine stop lanyard switch malfunction	—	Check the engine stop lanyard switch.	8-33
	Short, open or loose connection in ignition coil circuit and ground circuit	—	Check the wiring harness.	WD
	Pulser coil assembly malfunction	—	Check the pulser coil assembly.	8-33
—	ECM malfunction	Blown fuse	Check the fuse (20 A).	8-34
		Main/high-pressure fuel pump relay malfunction	Check the main/high-pressure fuel pump relay.	8-34
		Short, open or loose connection in ECM circuit	Check the ECM.	8-37
		Engine start switch malfunction	Check the engine start switch.	8-27

WD: See the wiring diagram

9

Symptom 1: Engine does not start (engine cranks)

Symptom 2	Cause 1	Cause 2	Checking step	Refer to page
Fuel not supplied	Pinched or kinked fuel hose	—	Check the fuel hoses and fuel hose joint.	3-3
	Clogged fuel filter	—	Clean or replace the fuel filter and strainer.	3-4 4-17 4-25
	High-pressure fuel pump does not operate	Blown fuse	Check the fuse (20 A).	8-34
		Short, open or loose connection in High-pressure fuel pump circuit	Check the wiring harness.	WD
		Main/high-pressure fuel pump relay malfunction	Check the main/high-pressure fuel pump relay.	8-34
		High-pressure fuel pump malfunction	Check the high-pressure fuel pump.	8-52
	Fuel pump does not operate	Fuel pump malfunction	Check the fuel pump.	4-20
	Fuel not supplied to the fuel rail	—	Check the high-pressure fuel pump.	8-52
Low compression pressure	Valve clearance not adjusted correctly	—	Adjust the valve clearance.	5-8
	Damaged cylinder head gasket	—	Disassemble and check the cylinder head and power unit.	5-29 5-40
	Damaged valve			
	Valve stuck to valve guide			
	Scratched piston			
	Scratched cylinder			

WD: See the wiring diagram

Symptom 1: Unstable engine idle speed, poor acceleration, poor performance or limited engine speed

Symptom 2	Cause 1	Cause 2	Checking step	Refer to page
Spark plug does not spark (some cylinders)	Spark plug malfunction	—	Check the spark plug.	3-7
	Spark plug wire malfunction	—	Check the spark plug wire.	8-31
	Ignition coil malfunction	—	Check the ignition coil.	8-31
	Short, open or loose connection in ignition coil circuit and ground circuit	—	Check the wiring harness.	WD
	Pulser coil assembly malfunction	—	Check the pulser coil assembly.	8-33
	ECM malfunction	—	Check the ECM.	8-37
High-pressure fuel line malfunction (fuel pressure is low)	Pinched or kinked fuel hose	—	Check the fuel hoses and fuel hose joint.	3-3
	Clogged fuel filter	—	Clean or replace the fuel filter.	4-25
	Fuel leakage from fuel line	—	Replace the affected parts.	4-12 4-23 4-24 4-25
	Pressure regulator malfunction	—	Check the pressure regulator.	4-9
	High-pressure fuel pump malfunction	—	Check the high-pressure fuel pump.	8-52
	Low-pressure fuel pump does not operate	Fuel pump malfunction	Check the fuel pump.	4-20
Fuel not supplied (some cylinders)	Pinched or kinked fuel hose	—	Check the fuel hoses and fuel hose joint.	3-3
	Fuel injector malfunction	—	Check the fuel injector.	8-51
	Short, open or loose connection in fuel injector circuit	—	Check the wiring harness.	WD
	ECM malfunction	—	Check the ECM.	8-37

WD: See the wiring diagram

Symptom 2	Cause 1	Cause 2	Checking step	Refer to page
Low compression pressure	Valve clearance not adjusted correctly	—	Adjust the valve clearance.	5-8
	Damaged cylinder head gasket	—	Disassemble and check the cylinder head and power unit.	5-29 5-40
	Damaged valve			
	Scratched piston			
—	TPS output voltage out of specification	Stuck throttle valves	Check the TPS.	8-38
			Check the throttle valve.	8-38

Symptom 1: High engine idle speed

Symptom 2	Cause 1	Cause 2	Checking step	Refer to page
—	Accelerator cam does not return to fully-closed position.	Throttle link rod length not adjusted correctly	Check the throttle link rod.	3-9
		Throttle cable(s) not adjusted correctly	Check and adjust the throttle cable(s).	3-9
		Damage or worn accelerator cam roller	Check the accelerator cam roller, throttle control lever and accelerator cam.	4-13
—	Air leakage (throttle valve-cylinder head)	—	Check the gaskets between the cylinder head and intake manifold, between the intake manifold and throttle body assembly.	4-11 4-12
	ISC malfunction	—	Check the ISC.	8-40
		Air leakage from ISC body	Check the ISC body.	4-12
	ECM malfunction	—	Check the ECM.	8-37

Symptom 1: Poor performance (below 2,500 r/min)

Symptom 2	Cause 1	Cause 2	Checking step	Refer to page
• Buzzer comes on • Overheat warning indicator comes on • Cooling water does not discharge from the cooling water pilot hole	Clogged cooling water inlet	—	Check the cooling water inlets.	3-9
	Clogged cooling water passages	—	Check the cooling water passages.	3-9
	Cooling water leakage			
	Damaged water pipe or incorrect installation	—	Check the water pipe and its installation.	7-19
	Water pump malfunction	Damaged water pump impeller	Check the impeller.	6-5
			Check the Woodruff key.	6-5
		Water leakage from water pump housing	Check the water pump housing.	6-5
			Check the insert cartridge.	6-5
			Check the outer plate cartridge.	6-5
	Thermostat malfunction	—	Check the thermostat.	3-8
• Buzzer comes on • Oil pressure warning indicator comes on	Insufficient engine oil	—	Add sufficient oil.	3-6
	Engine oil pressure decrease	Clogged oil filter	Replace the oil filter.	3-6
		Oil pump malfunction	Check the oil pump.	7-22
		Clogged oil strainer	Check the oil strainer.	7-25
		Clogged oil passage	Check the engine oil passage (power unit and oil pump).	7-16
	Oil pressure switch malfunction	—	Check the oil pressure switch.	8-43
	Relief valve malfunction	—	Check the oil pressure.	5-2

Troubleshooting the lower unit

Symptom 1: Shift mechanism of the forward gear and reverse gear does not operate properly

Symptom 2	Cause 1	Cause 2	Checking step	Refer to page
—	Throttle open (tiller handle model)	—	Turn the throttle to the fully-closed position.	1-23
	Remote control box malfunction (remote control model)	—	Check the remote control box.	1-23
	Shift cable and shift cable joint malfunction	—	Check the shift cable and shift cable joint.	3-12
			Adjust the shift cable.	
	Shift rod operation malfunction	Shift rod detent malfunction	Check the shift rod.	7-15 6-2
		Shift rod connection malfunction	Check the connection of shift rod.	6-2 6-10
	Shift mechanism malfunction (in lower unit)	—	Disassemble and check the lower unit.	6-6 6-13

A.

Abbreviation 1-3
Adjusting the valve clearance 5-10
Aft view 8-7
After test run 1-26
Assembling the cylinder block 5-54
Assembling the drive shaft housing 6-16
Assembling the forward gear 6-16
Assembling the fuel pump 4-21
Assembling the lower case 6-17
Assembling the oil pan and exhaust manifold 7-25
Assembling the oil pump 7-22
Assembling the propeller shaft assembly 6-12
Assembling the propeller shaft housing 6-10
Assembling the starter motor 8-23
Assembling the steering friction plate 7-10
Assembling the tiller handle 7-7
Assembling the upper case 7-26
Assembling the vapor separator 4-27

B.

Backlash 6-28
Base assembly 5-3
Bottom cowling 7-12, 8-11
Bow view 8-5
Bracket unit 3-13
Break-in 1-26

C.

Camshaft 5-7
Canister 4-28
Changing the engine oil 3-6
Changing the gear oil 3-14
Charging system 8-53
Checking the anode 3-16
Checking the armature 8-22
Checking the battery 3-17
Checking the brush holder and brush 8-23
Checking the buzzer (tiller handle model) 8-46
Checking the camshaft 5-23
Checking the canister 4-29
Checking the compression pressure 5-1
Checking the connecting rod big end side clearance 5-47
Checking the cooling water passage 3-9
Checking the cooling water pilot hole 1-25
Checking the cooling water temperature sensor 8-43
Checking the crankpin oil clearance 5-48
Checking the crankshaft 5-47
Checking the crankshaft journal oil clearance 5-51
Checking the cylinder block 5-45
Checking the cylinder bore 5-45
Checking the cylinder head 5-37
Checking the diaphragm and valve 4-21
Checking the dog clutch and shift rod joint 6-10
Checking the drive shaft 6-15
Checking the drive shaft bushing 7-24
Checking the ECM 8-37
Checking the electrical component 8-15
Checking the engine idle speed 3-13
Checking the engine oil 3-5
Checking the engine oil level 1-21
Checking the engine start switch 8-27
Checking the engine start switch and engine stop lanyard switch 1-25
Checking the engine stop lanyard switch 8-33
Checking the exhaust cover 5-43
Checking the filter 4-29
Checking the fuel filter 3-4
Checking the fuel filter assembly 4-19
Checking the fuel injector 8-51
Checking the fuel joint and fuel hoses (fuel tank-to-fuel injector) 3-3
Checking the fuel pump 4-20
Checking the fuel system 1-20
Checking the fuse 8-34
Checking the gear oil 3-14
Checking the gear oil level 1-21
Checking the gear shift and throttle operation 1-23
Checking the gear shift system 3-12
Checking the high-pressure fuel pump ... 8-52
Checking the hour meter 8-49
Checking the ignition coil and spark plug wire 8-31
Checking the ignition spark 8-30
Checking the intake manifold 4-14
Checking the intake silencer 4-14
Checking the ISC 8-40
Checking the lower case 6-16
Checking the lower unit for air leakage ... 3-15
Checking the magnet switch 8-19
Checking the main/high-pressure fuel pump relay 8-34
Checking the neutral switch 8-28
Checking the oil pan and exhaust manifold 7-25
Checking the oil pressure 5-2
Checking the oil pressure switch 8-43

Checking the oil pump 7-22
Checking the oil strainer 7-25
Checking the outboard motor mounting height 1-21
Checking the PCV 5-43
Checking the pinion and forward gear 6-15
Checking the piston clearance 5-45
Checking the piston diameter 5-45
Checking the piston ring 5-46
Checking the piston ring end gap 5-46
Checking the piston ring groove 5-47
Checking the piston ring side clearance 5-47
Checking the pressure regulator 4-9
Checking the propeller 3-16
Checking the propeller shaft 6-10
Checking the propeller shaft housing 6-10
Checking the pulser coil assembly 8-33
Checking the Rectifier Regulator 8-54
Checking the reverse gear 6-10
Checking the sensor assembly 8-41
Checking the shift position switch 8-47
Checking the spark plug 3-7
Checking the starter motor operation 8-18
Checking the starter motor pinion 8-19
Checking the starter relay 8-29
Checking the stator assembly 8-53
Checking the steering operation 1-23
Checking the steering system (tiller handle model) 3-13
Checking the thermostat 3-8
Checking the throttle system 3-9
Checking the tilt operation 1-24
Checking the tilt system 3-14
Checking the timing belt 3-7
Checking the timing belt and sprocket 5-22
Checking the top cowling 3-3
Checking the TPS 8-38
Checking the valve 5-32
Checking the valve clearance 5-8
Checking the valve guide 5-33
Checking the valve seat 5-34
Checking the valve spring 5-31
Checking the vapor separator 4-27
Checking the warning indicator assembly (tiller handle model) 8-45
Checking the water detection switch 8-50
Checking the water pump and shift rod 6-5
Checking using the YDIS 8-15
Clamp bracket and swivel bracket 7-31
Connecting the communication cable to the outboard motor 9-3
Control system 3-9
Cylinder block 5-40
Cylinder head 5-29

D.

Dimension 2-10
Disassembling the cylinder block 5-43
Disassembling the drive shaft housing ... 6-14
Disassembling the forward gear 6-14
Disassembling the fuel pump 4-20
Disassembling the lower case 6-15
Disassembling the oil pan and exhaust manifold 7-24
Disassembling the oil pump 7-22
Disassembling the propeller shaft assembly 6-8
Disassembling the propeller shaft housing 6-9
Disassembling the starter motor 8-20
Disassembling the tiller handle 7-6
Disassembling the upper case 7-23
Disassembling the vapor separator 4-26
Disassembly and assembly 1-6
Disconnecting the quick connector 4-7
Draining the fuel 3-5
Drive shaft and lower case 6-13

E.

ECM 1-15, 5-16
Electrical 2-7
Electrical component and wiring harness routing 8-1
Engine electric control system 8-34
Exhaust cover 5-41

F.

Feature and benefit 1-15
Fire prevention 1-5
Fuel control system 8-50
Fuel filter and fuel pump 4-17
Fuel hose, blowby hose, vapor gas hose, vacuum hose, canister hose and cooling water hose 4-1
Fuel system 2-6, 3-3, 4-7

G.

General 3-16
General specification 2-1
General torque 2-15
Good working practice 1-6

H.

Hose routing 4-1

How to use this manual 1-1

I.

Identification 1-7
Ignition and ignition control system 8-30
Ignition coil and starter motor 5-5
Installing the camshaft, sprocket and timing belt 5-23
Installing the clamp bracket 7-35
Installing the cylinder head 5-38
Installing the drive shaft 6-17
Installing the exhaust cover 5-59
Installing the fuel hose clamp 4-26
Installing the fuel injector 4-15
Installing the hydro tilt assembly 7-37
Installing the intake manifold 4-15
Installing the intake silencer 4-16
Installing the lower unit 6-21
Installing the power unit 5-60
Installing the propeller shaft housing 6-18
Installing the shift rod 6-19
Installing the starter motor 8-26
Installing the steering arm 7-29
Installing the throttle body assembly 4-16
Installing the throttle link 4-14
Installing the upper case 7-27
Installing the valve 5-37
Installing the water pump 6-19
Intake manifold and fuel injector 4-11
Introduction 9-1

J.

Junction box 5-18

L.

Lower unit 2-7, 3-14, 6-1
Lubricating the outboard motor 3-18

M.

Maintenance interval chart 3-1
Maintenance specification 2-3
Manual format 1-1
Measuring the forward and reverse gear backlash 6-28
Measuring the fuel pressure 4-8
Measuring the peak voltage 8-15
Model 1-7

O.

Oil pump 7-21

P.

Part, lubricant and sealant 1-5
Port view 8-1
Power unit 2-3, 3-5, 5-14
Power unit (Check and adjustment) 5-1
Power unit assembly 5-14
Predelivery check 1-17
Propeller selection 1-17
Propeller shaft housing 6-6
Propeller size 1-17

R.

Reducing the fuel pressure 4-7
Refacing the valve seat 5-35
Removing the clamp bracket 7-35
Removing the cylinder head 5-31
Removing the drive shaft 6-14
Removing the exhaust cover 5-43
Removing the fuel hose clamp 4-26
Removing the hydro tilt assembly 7-34
Removing the intake manifold 4-14
Removing the lower unit 6-4
Removing the power unit 5-19
Removing the propeller shaft housing assembly 6-8
Removing the starter motor 8-18
Removing the steering arm 7-29
Removing the timing belt, sprocket and camshaft 5-20
Removing the upper case 7-22
Removing the water pump and shift rod ... 6-5
Replacing the oil filter 3-6
Replacing the timing belt 5-11
Replacing the valve guide 5-33

S.

Safety while working 1-5
Sealant and locking agent table 1-4
Selecting the connecting rod bearing 5-49
Selecting the forward gear shim 6-26
Selecting the main bearing 5-52
Selecting the pinion shim 6-24
Selecting the reverse gear shim 6-27
Selection 1-17
Self-protection 1-5
Serial number 1-7
Setting the battery 1-21
Setting the steering friction plate (tiller handle model) 1-20
Setting the throttle cable and shift cable 1-22
Setting the tiller handle (tiller handle model) 1-17

Shift rod 7-15
Shimming 6-23, 6-24
Special service tool 1-8
Specified torque 2-13
Starboard view 8-3
Starter motor 8-16
Starting system 8-27
Steering friction plate 7-5
Symbol 1-2

T.

Test run 1-26
Throttle link 4-13
Tightening torque 2-13
Tiller handle (tiller handle model) 7-1, 8-13
Timing belt and sprocket 5-4
Top cowling 3-3
Top view 8-9
Trouble code and checking step 9-6
Troubleshooting the lower unit 9-15
Troubleshooting the power unit 9-4
Troubleshooting the power unit (trouble code not detected) 9-9
Troubleshooting the power unit using the diagnostic flash indicator 9-8
Troubleshooting the power unit using the YDIS 9-4

U.

Upper case and steering arm 7-16

V.

Vapor separator 4-23
Ventilation 1-5

Y.

YDIS 9-1

— MEMO —

Wiring diagram
F75CEHD, F75CED

① Ignition coil
② Spark plug
③ Battery
④ Cooling water temperature sensor
⑤ Starter motor
⑥ Fuse (30 A): Starter relay
⑦ Fuse (20 A): Main, Rectifier Regulator
⑧ Fuse (20 A): Engine start switch
⑨ Fuse (20 A): ECM, Ignition coil,
High-pressure fuel pump
Fuel injector, ISC
⑩ Starter relay
⑪ High-pressure fuel pump
⑫ Main/high-pressure fuel pump relay
⑬ Oil pressure switch
⑭ Pulser coil assembly
⑮ Stator assembly
⑯ Rectifier Regulator
⑰ ECM
⑱ TPS
⑲ Hour meter
⑳ Shift position switch
㉑ Sensor assembly
㉒ Fuel injector
㉓ ISC
㉔ Water detection switch
㉕ Engine start switch
㉖ Engine stop lanyard switch
㉗ Overheat warning indicator
㉘ Low oil pressure warning indicator
㉙ Neutral switch
㉚ Buzzer
㉛ Warning indicator lead
㉜ 10-pin main harness
㉝ Joint connector 1
㉞ Joint connector 2

A To warning indicator assembly/tachometer
B To tiller handle/remote control box
C To personal computer for diagnosis (YDIS)
D To diagnostic flash indicator B
(special service tool)

Color code

B : Black
Br : Brown
G : Green
Gy : Gray
L : Blue
Lg : Light green
O : Orange
P : Pink
R : Red
Sb : Sky blue
W : White
Y : Yellow
B/R : Black/red
B/W : Black/white
B/Y : Black/yellow
Br/W : Brown/white
G/B : Green/black
G/R : Green/red
G/W : Green/white
G/Y : Green/yellow
L/G : Blue/green
L/W : Blue/white
P/B : Pink/black
P/G : Pink/green
P/W : Pink/white
Pu/B : Purple/black
Pu/R : Purple/red
R/B : Red/black
R/Y : Red/yellow
W/B : White/black
W/R : White/red

YAMAHA MOTOR CO., LTD.

Printed in Japan
Jul. 2007 – 0.3 × 1
(E)

Printed on recycled paper

F75CEHD, F75CED

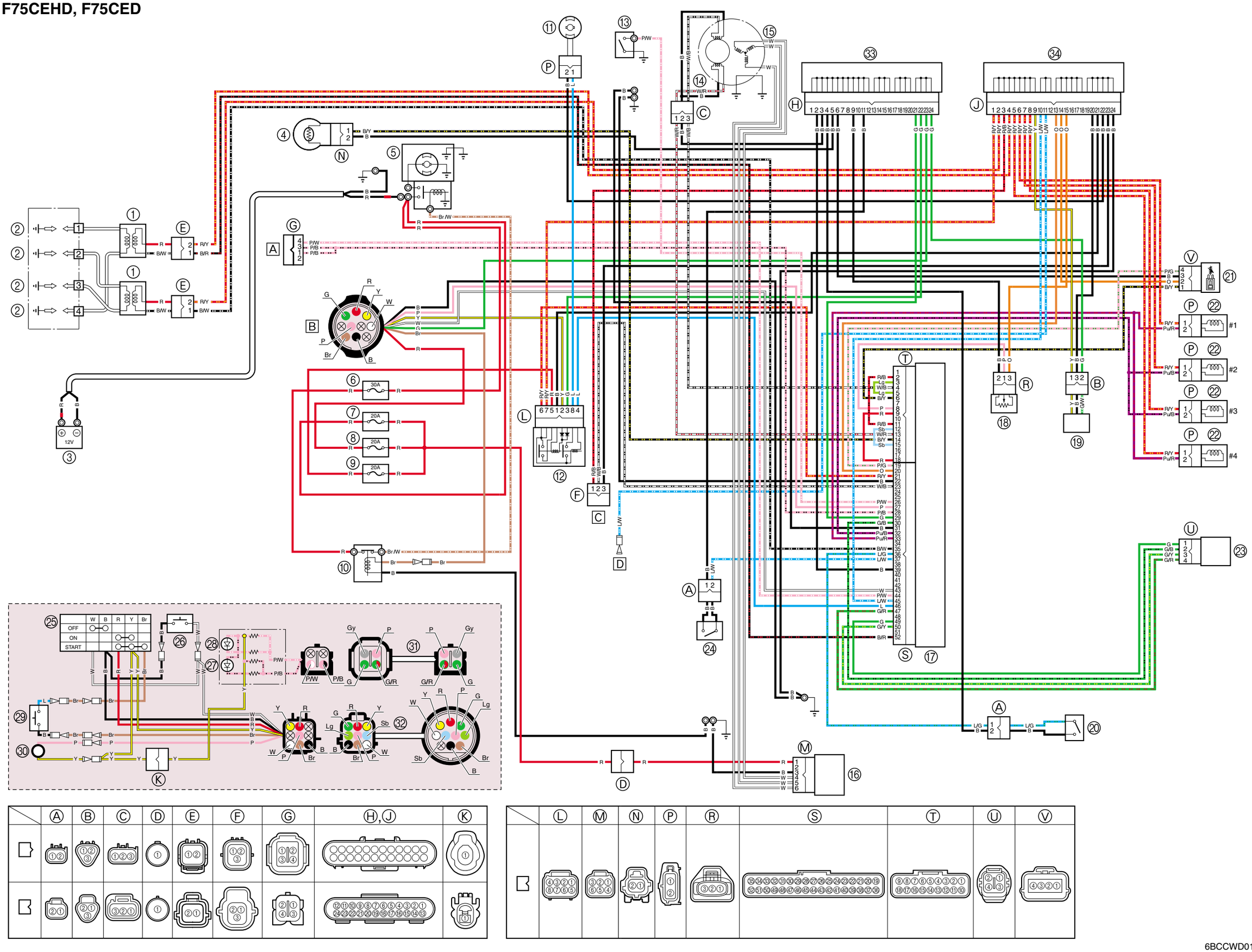

6BCCWD01